DOCUMENT 121-13

Range Commanders Council

TELEMETRY GROUP

INSTRUMENTATION ENGINEERS HANDBOOK

ABERDEEN TEST CENTER
DUGWAY PROVING GROUND
REAGAN TEST SITE
WHITE SANDS MISSILE RANGE
YUMA PROVING GROUND

NAVAL AIR WARFARE CENTER AIRCRAFT DIVISION
NAVAL AIR WARFARE CENTER WEAPONS DIVISION
NAVAL UNDERSEA WARFARE CENTER DIVISION, KEYPORT
NAVAL UNDERSEA WARFARE CENTER DIVISION, NEWPORT
PACIFIC MISSILE RANGE FACILITY

30TH SPACE WING
45TH SPACE WING
96TH TEST WING
412TH TEST WING
ARNOLD ENGINEERING DEVELOPMENT COMPLEX

NATIONAL AERONAUTICS AND SPACE ADMINISTRATION

DISTRIBUTION A: APPROVED FOR PUBLIC RELEASE
DISTRIBUTION IS UNLIMITED

This page intentionally left blank.

DOCUMENT 121-13

INSTRUMENTATION ENGINEERS HANDBOOK

JANUARY 2013

Prepared by

VEHICULAR INSTRUMENTATION/TRANSDUCER COMMITTEE
TELEMETRY GROUP

RANGE COMMANDERS COUNCIL

Published by

Secretariat
Range Commanders Council
US Army White Sands Missile Range
New Mexico 88002-5110

This page intentionally left blank.

TABLE OF CONTENTS

PREFACE ..... **xvii**

ACRONYMS AND ABBREVIATIONS ..... **xix**

Chapter 1 Introduction **1-1**

1.1 Description of an Instrumentation System 1-1
1.2 Typical Instrumentation System 1-2
1.3 Signal Sources and Sensor Selection Criteria 1-3
1.4 Signal Conditioning 1-4
1.5 Data Collection and Pulse Code Modulation Formats 1-4
1.6 Calibration 1-5
1.7 Telemetering 1-6
1.8 Recording 1-6

Chapter 2 Typical Instrumentation System (broad overview) **2-1**

2.1 Typical Vehicular System 2-1

2.1.1 Hypothetical system design 2-2
2.1.2 Measurements 2-2
2.1.3 Video camera output 2-2
2.1.4 Initial questions 2-2
2.1.5 Additional questions 2-4

2.2 Typical Laboratory System 2-8

2.2.1 Application requirements 2-8
2.2.2 Operational requirements 2-9
2.2.3 Supervisory control and data acquisition requirements 2-9
2.2.4 Software and hardware architecture 2-9
2.2.5 Components and usability 2-10
2.2.6 Templates and indirect tags 2-10
2.2.7 Scripting 2-11
2.2.8 Communications 2-11
2.2.9 Redundant displays 2-11
2.2.10 Historical trend data 2-11
2.2.11 Recipes 2-11
2.2.12 Alarming 2-11

Chapter 3 Signal Sources **3-1**

3.1 The Starting Point 3-1
3.2 Strain Gages 3-1

3.2.1 Strain and stress 3-1
3.2.2 Bonded resistance strain gage 3-6
3.2.3 Electrical measurement considerations 3-8

3.2.4 Calibration 3-9
3.2.5 Strain gage installation 3-10
3.2.6 Common strain gage configurations as transducers 3-11

3.3 Thermocouples 3-16

3.3.1 Thermocouple theory 3-17

3.4 Resistive Temperature Devices 3-21

3.4.1 Resistive temperature device theory 3-21

3.5 Hall Effect Devices 3-22
3.6 Angular Position Sensors (Synchros and Resolvers) 3-23

3.6.1 Synchros 3-23
3.6.2 Resolvers 3-25
3.6.3 Absolute shaft encoders 3-26
3.6.4 Linear variable differential transformer 3-27
3.6.5 Rotational variable differential transformer 3-30
3.6.6 Potentiometers 3-30

3.7 Rotational Speed 3-31

3.7.1 Magnetic pickups 3-31
3.7.2 Optical methods 3-33

3.8 Photodetectors/Photodiodes 3-36

3.8.1 Construction 3-36
3.8.2 Device optimization 3-37

3.9 Piezoelectric Transducers 3-38

3.9.1 Description of operation 3-38
3.9.2 Piezoelectric force transducers construction. 3-39
3.9.3 Piezoelectric accelerometers 3-40

3.10 Electric Current Transducers 3-42

3.10.1 Current shunts 3-42
3.10.2 Current transformers 3-43
3.10.3 Hall effect-type current transducer 3-43

3.11 Anemometers 3-44

3.11.1 Sonic anemometer/thermometer 3-44
3.11.2 Constant-temperature anemometers 3-45
3.11.3 Hot-wire anemometers 3-46
3.11.4 Air duct traversing 3-46

3.12 Actinometers 3-47
3.13 Pitot-Static Systems 3-48

3.13.1 Basic theory of operation 3-48
3.13.2 Properties and characteristics 3-49
3.13.3 Transducers for Pitot-static systems 3-56

3.14 Aeronautical Radio, Incorporated 429 3-58

3.14.1 Background 3-58
3.14.2 ARINC 429P1-15 specification 3-60
3.14.3 Cabling 3-60
3.14.4 Transmitter 3-63
3.14.5 Receiver 3-63
3.14.6 Word overview 3-64
3.14.7 Information identifier 3-64
3.14.8 Equipment identifier 3-64
3.14.9 Source/destination identifier 3-65
3.14.10 Sign/status matrix 3-65
3.14.11 Protocol 3-66

3.15 Military Standard 1553 3-66

3.15.1 Specifics 3-67
3.15.2 Physical connection to the 1553 bus 3-72
3.15.3 1553A versus 1553B specification differences 3-73

3.16 Serial Communications 3-73

3.16.1 Concept behind serial communications 3-74
3.16.2 Serial bit error correction methods 3-74
3.16.3 Communications terminology 3-75

3.17 RS-422 3-76
3.18 Gyroscopes 3-77

Chapter 4 Signal Conditioning 4-1

4.1 Introduction 4-1
4.2 Analog Signal Conditioning 4-1
4.3 Filtering 4-5
4.4 Sampling Theory 4-6

4.4.1 Nyquist sampling theorem 4-6
4.4.2 Aliasing 4-7
4.4.3 Anti-aliasing filters 4-9

4.5 Wheatstone Bridge 4-9

4.5.1 Wheatstone bridge configurations 4-9
4.5.2 Wheatstone bridge (some guidance) 4-10
4.5.3 Constant current loop 4-11

4.6 Digital Signal Conditioning 4-11

4.6.1 Signal conditioning for transducers 4-12
4.6.2 Understanding signal-specific signal conditioning 4-12

4.7 Conclusion 4-16

Chapter 5 Flow and Level Measurement 5-1

5.1 The Flow Pioneers 5-1
5.2 Flow Sensor Selection 5-6
5.3 Accuracy Versus Repeatability 5-9
5.4 Differential Pressure Flowmeters 5-11

5.4.1 Primary element options 5-11
5.4.2 Accuracy and rangeability 5-13
5.4.3 Piping, installation, and maintenance 5-14
5.4.4 Sizing the orifice plate 5-17
5.4.5 Orifice types and selection 5-18
5.4.6 Orifice performance 5-19

5.5 Venturi Tubes and Flow Tubes 5-20

5.5.1 Flow nozzles 5-21
5.5.2 Segmental wedge elements 5-22
5.5.3 Venturi-cone element 5-23

5.6 Pitot Tubes 5-23

5.6.1 Theory of operation 5-24
5.6.2 Static pressure measurement 5-25
5.6.3 Single-port Pitot tubes 5-25
5.6.4 Averaging Pitot tubes 5-27
5.6.5 Area averaging 5-28
5.6.6 Vibration damage 5-28

5.7 Variable Area Flowmeters 5-29

5.7.1 Purge-flow regulators 5-29
5.7.2 Rotameters (tapered tube) 5-30
5.7.3 Design variations 5-31
5.7.4 Accuracy 5-33
5.7.5 Other variable-area flowmeters 5-34

5.8 Mechanical Flowmeters 5-34

5.8.1 Positive displacement flowmeters 5-35
5.8.2 Liquid positive displacement flowmeters 5-35
5.8.3 Piston meters 5-36
5.8.4 Gear and lobe meters 5-37
5.8.5 Helix meters 5-38
5.8.6 Metering pumps 5-39
5.8.7 Gas positive displacement meters 5-40
5.8.8 High-precision positive displacement systems 5-41
5.8.9 Testing, calibration, and provers 5-42
5.8.10 Positive displacement meter accessories 5-42

5.9 Turbine Flowmeters 5-43

5.9.1 Design and construction variations 5-44
5.9.2 Turbine meter accuracy 5-45
5.9.3 Sizing and selection 5-46

5.9.4 Installation and accessories 5-46
5.9.5 Gas turbine and shunt meters 5-47
5.9.6 Other rotary flowmeters 5-47

5.10 Electronic Flowmeters 5-48

5.10.1 Magnetic flowmeters 5-49
5.10.2 Magmeter excitation 5-50
5.10.3 Flow tubes, liners, and probes 5-51
5.10.4 Electrodes 5-51
5.10.5 Selection and sizing 5-52
5.10.6 Problem applications 5-52
5.10.7 Installation 5-53

5.11 Vortex Flowmeters 5-54

5.11.1 Vortex meter design 5-55
5.11.2 Sizing 5-56
5.11.3 Accuracy and rangeability 5-57
5.11.4 Applications and limitations 5-57
5.11.5 Installation recommendations 5-58

5.12 Ultrasonic Flowmeters 5-60

5.12.1 The Doppler shift 5-60
5.12.2 Transit time measurement 5-61
5.12.3 Design variations 5-62
5.12.4 Applications and performance 5-63

5.13 Mass Flowmeters 5-65

5.13.1 Coriolis mass flowmeters 5-65
5.13.2 Tube designs 5-67
5.13.3 Transmitter designs 5-69
5.13.4 Coriolis evolution 5-70
5.13.5 Interferences 5-71
5.13.6 Accuracy and rangeability 5-71
5.13.7 Sizing and pressure drop 5-71
5.13.8 Applications and limitations 5-72
5.13.9 Installation recommendations 5-73
5.13.10 Thermal mass flowmeters 5-76
5.13.11 Theory of operation 5-76
5.13.12 Heated-tube design 5-77
5.13.13 Bypass-type design 5-78
5.13.14 Air velocity probes 5-79
5.13.15 Uses and limitations 5-79

Chapter 6 Pulse Code Modulation Formats 6-1

6.1 Introduction 6-1
6.2 Definitions 6-1
6.3 Class I and Class II Pulse Code Modulation 6-4

6.4 Calculating the Parameter Sample Rate 6-4
6.5 Building a Pulse Code Modulation Format (An Example) 6-5

Chapter 7 Calibration 7-1

7.1 Definition and Need for Calibration 7-1
7.2 Calibration Types 7-1

7.2.1 Transducer calibration 7-2
7.2.2 Data system calibration 7-2
7.2.3 Physical end-to-end calibration 7-2
7.2.4 Calibration concerns 7-3

7.3 Sample Transducer Calibration Procedure Format 7-3
7.4 Static and Dynamic Calibration 7-4

7.4.1 Sample static calibration procedures 7-4
7.4.2 Sample dynamic calibration procedures (1 Hz to 10 kHz) 7-6
7.4.3 Sample shock tube calibration technique 7-8
7.4.4 Sample accelerometer frequency response evaluation 7-8

7.5 Check Channels 7-9

7.5.1 Typical checking procedures 7-10
7.5.2 Typical check channels 7-11

7.6 Sample Pitot-Static Calibration 7-11

7.6.1 Calibration of Pitot-static/air data transducer 7-12

7.7 Calibration Intervals 7-12

7.7.1 Challenges 7-13
7.7.2 Transducer calibration interval examples 7-13
7.7.3 Things to consider when establishing calibration intervals 7-14
7.7.4 Calibration interval recommendations and guidelines 7-15
7.7.5 Critical measurement calibration intervals 7-16
7.7.6 Detailed matrix recommendation 7-16

7.8 Conclusions 7-17

Chapter 8 Telemetry Transmission and Reception 8-1

8.1 Introduction 8-1
8.2 Telemetry System 8-1
8.3 Transmission Channel 8-7
8.4 Receiving Station 8-8
8.5 Link Analysis 8-9
8.6 E_b/N_0 8-11

Chapter 9 Recorders and Recording 9-1

9.1 Introduction 9-1
9.2 Recording Systems (Pros and Cons) 9-1

9.2.1 Longitudinal fixed-head recorder 9-1
9.2.2 Transverse scan, rotary, and magnetic tape digital recorders 9-3
9.2.3 Solid-state memory recorders 9-4
9.2.4 Mechanical hard-disk drive 9-5
9.2.5 Solid-state disk drives 9-7

9.3 Data Types and Bit Rates 9-8

9.3.1 Pulse code modulation data 9-9
9.3.2 Military Standard 1553 9-9
9.3.3 Aeronautical Radio, Incorporated 429 9-9
9.3.4 Analog data 9-9
9.3.5 IRIG time code 9-9
9.3.6 Video 9-10
9.3.7 Fibre channel 9-10
9.3.8 FireWire (IEEE-1394B) 9-10

9.4 Multi-stream File Formats 9-10

9.4.1 Asynchronous recorder multiplexer output re-constructor 9-10
9.4.2 IRIG-106 Chapter 10 9-11

9.5 Record Time Versus Storage Media 9-13
9.6 Conclusion 9-16

Chapter 10. Practical Considerations 10-1

10.1 Introduction 10-1
10.2 Piezoelectric Transducers 10-1

10.2.1 Composition 10-1
10.2.2 Signal conditioning 10-2
10.2.3 Selection 10-3
10.2.4 Mounting 10-3
10.2.5 Cabling 10-4

10.3 Baud Rate and Bits per Second 10-5

10.3.1 Bits per second 10-5
10.3.2 Baud rate 10-5
10.3.3 Determining bits per second 10-5

10.4 Timing Issues and the Instrumentation System 10-7

10.4.1 IRIG-B 10-7
10.4.2 Global Positioning System and IRIG-B 10-8

10.5 Pitot-Static Installation Considerations 10-8
10.6 Connection to the Military Standard 1553 Bus 10-10

10.6.1 Existing buses 10-10
10.6.2 1553 bus couplers 10-11
10.6.3 1553 cable information 10-11
10.6.4 Typical design questions 10-11

10.7 Recorders and Recording 10-13

10.7.1 Installation considerations 10-13
10.7.2 Cost 10-14
10.7.3 Security 10-14
10.7.4 Archiving 10-16

Chapter 11. Grounding, Shielding, and Noise Reduction 11-1

11.1 Background 11-1
11.2 Basic Principles of Noise and Noise Reduction Techniques 11-2
11.3 Grounding 11-4
11.4 Shielding 11-9
11.5 Other Noise Reduction Techniques 11-11

11.5.1 Balancing 11-11
11.5.2 Power supply de-coupling 11-12
11.5.3 Ferrite beads 11-13
11.5.4 System bandwidth 11-13
11.5.5 Modulation and coding 11-13

11.6 Rules of Thumb 11-13

Chapter 12. Electric Power Load Analysis 12-1

12.1 Introduction 12-1
12.2 Vehicle Electric System 12-1
12.3 Baseline Electrical Power Load Analyses 12-3

12.3.1 Power source summary 12-3
12.3.2 Direct current load analysis 12-4
12.3.3 Alternating current load analysis 12-5
12.3.4 Sources of the baseline electric power load analysis 12-7
12.3.5 Common errors in the baseline electric power load analysis 12-7

12.4 Electric Power Load Analysis due to a Vehicle Modification 12-8

12.4.1 Analysis of added loads 12-8
12.4.2 Modification electric power load analysis summary 12-11

12.5 Electric Power Load Analysis Maintenance and Instrumentation 12-15
12.6 Summary 12-15

Appendix A. References A-1

LIST OF FIGURES

Figure 1-1. Sample Instrumentation System 1-1
Figure 1-2. Notional Instrumentation System 1-2
Figure 2-1. Required Typical Instrumentation System 2-8
Figure 3-1. Stress and Strain 3-1

Figure 3-2. Shearing Strain 3-2
Figure 3-3. Poisson Strain 3-2
Figure 3-4. Stress-Strain Relationship 3-3
Figure 3-5. Normal Stress 3-3
Figure 3-6. Shearing Stress 3-4
Figure 3-7. Bi-Axial Strain 3-5
Figure 3-8. Tee Rosette 3-5
Figure 3-9. Rectangular Rosette 3-6
Figure 3-10. Magnified Gage 3-7
Figure 3-11. Wheatstone Bridge 3-8
Figure 3-12. Bridge Connections 3-9
Figure 3-13. Bridge Calibrations 3-10
Figure 3-14. Bridge Connections, N=2 3-12
Figure 3-15. Bridge Connections, 21=1+*v* 3-13
Figure 3-16. Bridge Configuration, N=4 3-14
Figure 3-17. Load Cell, N=2 (1+*v*) 3-15
Figure 3-18. Torsion Load Configuration 3-16
Figure 3-19. Thermocouple Cable Assembly 3-17
Figure 3-20. Thermocouple Junction 3-18
Figure 3-21. Thermocouple Reference Function 3-19
Figure 3-22. Synchro Transmitter 3-24
Figure 3-23. Synchro Receiver 3-24
Figure 3-24. Synchro Transmitter 3-25
Figure 3-25. Resolver 3-26
Figure 3-26. Shaft Encoders 3-27
Figure 3-27. Linear Variable Differential Transformer 3-27
Figure 3-28. Linear Variable Differential Transformer Construction 3-28
Figure 3-29. Linear Variable Differential Transformer 3-29
Figure 3-30. Typical Rotational Variable Differential Transformer 3-30
Figure 3-31. Potentiometer Circuit Diagram 3-31
Figure 3-32. Typical Potentiometer 3-31
Figure 3-33. Typical Magnetic Pick-up Design 3-33
Figure 3-34. Optical Rotational Speed Measurement 3-34
Figure 3-35. Typical Optical Sensor 3-35
Figure 3-36. Optical Shaft Encoder 3-36
Figure 3-37. Typical Compression/Tension Force Transducer (courtesy of PCB Inc.) ... 3-40
Figure 3-38. Typical Shear Mode Accelerometer (courtesy of PCB Inc) 3-41
Figure 3-39. Typical Compression Accelerometer (courtesy of PCB Inc) 3-41
Figure 3-40. The Piezoelectric Effect 3-42
Figure 3-41. Current Measurement 3-43
Figure 3-42. Current Transformer 3-43
Figure 3-43. Hall Effect Current Transducer (Open Loop) 3-44
Figure 3-44. Hot Wire Anemometer 3-46
Figure 3-45. Anemometer Measuring Station 3-47
Figure 3-46. Basic Pitot-Static System and Aircraft Instrumentation 3-48
Figure 3-47. Pitot-Static System Operation 3-49
Figure 3-48. Mach Number Range 3-50

Figure 3-49. Yaw and Pitch Angle Error 3-51
Figure 3-50. Yaw and Pitch Angle Error 3-51
Figure 3-51. Swivel Head Probes 3-52
Figure 3-52. Boundary Effects 3-52
Figure 3-53. Type PA Probe 3-54
Figure 3-54. Type PB Probe 3-55
Figure 3-55. Type PC Probe 3-55
Figure 3-56. Type PD Probe 3-55
Figure 3-57. Type PS Probe 3-55
Figure 3-58. Type PT Probe 3-56
Figure 3-59. Vibrating Element Pressure Sensor Cross-Sectional Diagram 3-56
Figure 3-60. Solid-State Element Pressure Sensor Cross-Sectional Diagram 3-57
Figure 3-61. 429 Twisted Pair 3-60
Figure 3-62. Star Topology 3-61
Figure 3-63. Bus Drop Topology 3-62
Figure 3-64. ARINC 429 Waveform 3-62
Figure 3-65. Information Transfer Formats 3-68
Figure 3-66. Data Encoding 3-69
Figure 3-67. Word Formats 3-70
Figure 3-68. Transformer Bus Coupling 3-72
Figure 3-69. Direct Bus Coupling 3-73
Figure 3-70. Asynchronous Serial Data Frame (8E1) 3-75
Figure 3-71. Cable Length Versus Data Rate 3-76
Figure 3-72. Basic Gyroscope 3-77
Figure 3-73. Basic Rate Gyroscope 3-78
Figure 3-74. Ring Laser Gyroscope 3-79
Figure 3-75. Micro-Electro-Mechanical System Gyroscope 3-80
Figure 4-1. CMR Versus Frequency 4-2
Figure 4-2. Resistor Divider Network 4-3
Figure 4-3. Fractional Gain Inverting Amplifier 4-3
Figure 4-4. Simplified Charge Amplifier 4-4
Figure 4-5. Typical Piezoelectric Transducer, Cable, and Charge Amplifier 4-4
Figure 4-6. Waveform Sampling 4-7
Figure 4-7. Waveform Reconstruction 4-8
Figure 4-8. Wheatstone Bridge 4-9
Figure 4-9. High-Side Current Measurement 4-13
Figure 4-10. Low-Side Current Measurement with Op-Amp 4-13
Figure 4-11. Simplistic I-V Converter 4-13
Figure 5-1. Pressure Loss Versus Orifice 5-2
Figure 5-2. Pressure Versus Energy 5-2
Figure 5-3. Faraday's Law 5-3
Figure 5-4. Magmeter Accuracy 5-3
Figure 5-5. Reynolds Numbers 5-4
Figure 5-6. Ultrasonic Flowmeter 5-5
Figure 5-7. Pressure Drop Flow Measurement 5-11
Figure 5-8. Flow Straighteners 5-15
Figure 5-9. Differential Pressure Tap 5-16

Figure 5-10. Orifices 5-17
Figure 5-11. Orifices for Viscous Flows 5-18
Figure 5-12. Venturi Versus Orifice Pressure Loss 5-20
Figure 5-13. Gradual Flow Elements 5-21
Figure 5-14. Segmental Wedge Element 5-22
Figure 5-15. Pitot-Static Tubes 5-24
Figure 5-16. Pitot Tube Installation Example 5-26
Figure 5-17. Averaging Pitot Tube 5-27
Figure 5-18. Area-Averaging Pitot Tube System 5-28
Figure 5-19. Variable Area Flowmeters 5-29
Figure 5-20. Purge Flowmeter Design 5-30
Figure 5-21. Manifold Configuration 5-32
Figure 5-22. Maximum Measurement Velocities 5-33
Figure 5-23. Positive Displacement Flowmeter 5-35
Figure 5-24. Rotating PD Meter 5-37
Figure 5-25. Low-Flow Accuracy Versus Viscosity 5-39
Figure 5-26. Metering Pump Designs 5-39
Figure 5-27. High-Precision PD Meter 5-41
Figure 5-28. Flow Prover 5-42
Figure 5-29. Turbine Flowmeters 5-43
Figure 5-30. Calibration Curve 5-45
Figure 5-31. Flow Straighteners 5-47
Figure 5-32. Rotary Flowmeters 5-48
Figure 5-33. Magmeter 5-49
Figure 5-34. Magmeter Excitation 5-50
Figure 5-35. Gallons per Minute Versus Feet per Second for Magnetic Flowmeters 5-52
Figure 5-36. Vortex Flowmeter Principle 5-54
Figure 5-37. Vortex-Detecting Sensor 5-55
Figure 5-38. Vortex Meter Installation Recommendations 5-59
Figure 5-39. Ultrasonic Flowmeter Designs 5-61
Figure 5-40. Clamp-On Ultrasonic Flowmeter 5-62
Figure 5-41. Spool-Piece Design 5-62
Figure 5-42. Axial Flowmeter 5-63
Figure 5-43. K-Factor Variation Versus Re-Number 5-64
Figure 5-44. Mass Flowmeter 5-65
Figure 5-45. The Coriolis Principle 5-66
Figure 5-46. Coriolis Metering 5-68
Figure 5-47. Coriolis Transmitter 5-69
Figure 5-48. Coriolis Design Improvements 5-70
Figure 5-49. Coriolis Meter Installations 5-74
Figure 5-50. Air Eliminator Installation 5-75
Figure 5-51. Thermal Mass Flowmeter Designs 5-77
Figure 5-52. Bypass Flowmeter Design 5-78
Figure 5-53. Thermal Velocity Stack 5-79
Figure 6-1. Minor Frame Synchronization Pattern 6-1
Figure 6-2. One Minor Frame 6-1
Figure 6-3. Major Frame 6-2

Figure 6-4. Subframe Identification 6-2
Figure 6-5. Word Position 6-2
Figure 6-6. Supercommutated Word 6-3
Figure 6-7. Subcommutated Words 6-3
Figure 7-1. Sample Three-Point Calibration Plot 7-6
Figure 7-2. Sample Block Diagram for Transducer Calibration 7-8
Figure 7-3. Typical Frequency Response 7-8
Figure 7-4. Sample Frequency Response 7-9
Figure 7-5. Barfield Pitot-Static Ramp Test Set 7-12
Figure 8-1. Typical Continuous Phase Frequency Shift Keying System 8-1
Figure 8-2. Non-Return-to-Zero Representation 8-2
Figure 8-3. 1 Mbps Continuous Phase Frequency Shift Keying Waveform 8-2
Figure 8-4. FM Modulator 8-3
Figure 8-5. Generic Quadrature Modulator 8-4
Figure 8-6. Generic FQPSK Modulator 8-4
Figure 8-7. 1 Mbps FQPSK Waveform 8-5
Figure 8-8. Generic SOQPSK Modulator 8-5
Figure 8-9. Typical SOQPSK/FQPSK System 8-7
Figure 8-10. Telemetry Channel 8-8
Figure 8-11. Typical Telemetry Receiving Station 8-9
Figure 8-12. Typical E_b/N_0 Plot 8-12
Figure 9-1. Longitudinal Fixed-Head Recorder 9-2
Figure 9-2. Transverse Recorders 9-3
Figure 9-3 Solid-State Memory Recorders 9-5
Figure 9-4. Mechanical Hard Drive Systems 9-6
Figure 9-5. Solid-State Disk Drives 9-7
Figure 9-6. Simplified ARMOR Recording System Block Diagram 9-11
Figure 9-7. Recording/Playback Block Diagram 9-11
Figure 9-8. Functional Layout of Standard 9-12
Figure 10-1. Typical Piezoelectric Accelerometer 10-1
Figure 10-2. Piezoelectric Accelerometer Equivalent Circuit 10-2
Figure 10-3. IRIG Bit Encoding 10-7
Figure 10-4. IRIG-B Frame Format 10-8
Figure 10-5. Typical Pitot Tube Installation, Underside Fuselage Without Integral Static Port 10-8
Figure 10-6. Typical Pitot Tube Installation, Underside Wing Without Integral Static Port 10-9
Figure 10-7. Standard Static Port Installation on Side of Fuselage 10-9
Figure 10-8. Thin Wall Installation 10-9
Figure 10-9. Thick Wall Installation 10-10
Figure 10-10. Limiting Lengths and Diameters 10-10
Figure 11-1. Definition of Near Field and Far Field 11-3
Figure 11-2. Noise Coupling Through a Common Impedance 11-3
Figure 11-3. Airframe or Vehicle Chassis as Signal Return and Ground 11-5
Figure 11-4. Ungrounded Enclosure as Shock Hazard 11-5
Figure 11-5. Shock Hazard Eliminated by Proper Grounding 11-6
Figure 11-6. Chassis Grounds Tied Together 11-6

Figure 11-7. Ground Loop Created by Multiple Grounds on a Grounding Structure 11-7
Figure 11-8. Grouping of Like Signal Types to a Single-Point Chassis Ground 11-8
Figure 11-9. Enclosure Properly Grounded for Safety and Shielding 11-9
Figure 11-10. Shielded Twisted Pair and Coaxial Cable Types 11-10
Figure 11-11. Proper Ground and Shield Arrangement for Single-Ended Signals 11-11
Figure 11-12. Balanced Circuit Versus Single-Ended Circuit 11-12
Figure 11-13. Proper Ground and Shield Arrangement for Differential Signals 11-12
Figure 11-14. Resistor-Capacitor Type Dissipative Power Supply Decoupling Filters ... 11-13
Figure 11-15. Ferrite Bead Application to Suppress DC Motor Commutator Noise 11-13
Figure 12-1. Multi-Engine Vehicle Electric Power System Example 12-2

LIST OF TABLES

Table 3-1. Standard Pitot-Static Models (Part 1 of 3) 3-53
Table 3-2. Standard Pitot-Static Models (Part 2 of 3) 3-54
Table 3-3. Standard Pitot-Static Models (Part 3 of 3) 3-54
Table 3-4. ARINC 419 Topologies 3-59
Table 3-5. ARINC Specification Parts 3-59
Table 3-6. Output Signal Tolerances 3-62
Table 3-7. ARINC 429 Word 3-64
Table 3-8. Information Identifier 3-64
Table 3-9. Specification Differences 3-73
Table 5-1. Flowmeter Evaluation Table 5-7
Table 5-2. Orientation Table for Flow Sensors 5-8
Table 5-3. Element Comparisons 5-13
Table 6-1. Measurement Sample Rates 6-5
Table 6-2. Developing the PCM Format 6-6
Table 6-3. Developing the PCM Format (Cont'd) 6-7
Table 6-4. Developing the PCM Format (Cont'd) 6-7
Table 6-5. Developing the PCM Format (Cont'd) 6-8
Table 6-6. Developing the PCM Format (Cont'd) 6-8
Table 6-7. Developing the PCM Format (Cont'd) 6-8
Table 7-1. Calibration Procedure Format 7-3
Table 7-2. Three-Point Static Sensitivity of an Accelerometer 7-5
Table 7-3. Single-Amplitude Single-Frequency Accelerometer Sensitivity 7-6
Table 7-4. Acoustic Sensitivity of Pressure Transducer 7-7
Table 7-5. Calibration Interval Matrix 7-16
Table 9-1. Mechanical Disk Versus Solid-State Flash Disk 9-8
Table 9-2. Reel Size Versus Record Time 9-13
Table 9-3. Record Times of Various Equipment 9-15
Table 10-1. Bus Coupler Information 10-11
Table 10-2. Bus Wire Information 10-11
Table 12-1. Example: DC Load Analysis Table for a Single DC Bus, Production Equipment 12-4
Table 12-2. Example: AC Load Analysis Tale for a Single AC Bus, Production Equipment 12-6
Table 12-3. Modification-Added Loads Analysis 12-9

Table 12-4. DC Electric Power Loads Analysis..... 12-12
Table 12-5. AC Electric Power Loads Analysis..... 12-13

PREFACE

This handbook is intended to give the instrumentation engineer the necessary background to understand the operation of an instrumentation system. Although this document identifies the main components and techniques of a typical instrumentation system, it is not intended to give an all-inclusive treatment of every possible instrumentation system scenario. Topics include signal sources, signal conditioning, data collection, data formatting, telemetering, recording, and data reconstruction (which includes the subtopics demodulation, demultiplexing, and display). Also addressed are calibration and the related issues of measurement uncertainty and operational considerations. Each of the above subsystems is explained in detail as to its function and utility.

This handbook will treat those portions of the instrumentation system not specifically addressed in the following Range Commanders Council (RCC) documents:

RCC Document 120: Telemetry Systems Radio Frequency Handbook[1]
RCC Document 119: Telemetry Applications Handbooks [2]
RCC Document 118, Volume 1: Test Methods for Vehicle Telemetry Systems[3]

Transmission, recording, demultiplexing, and display will be addressed in such a way as to augment the radio frequency (RF) and telemetry (TM) handbooks to provide a complete treatment for the instrumentation engineer. This handbook is not intended to be an all-inclusive document; however, it does introduce many common topics that an instrumentation engineer may encounter.

The Telemetry Group would like to acknowledge production of this document for the RCC by the Vehicular Instrumentation/Transducer Committee. Specific credit is issued to:

Task Lead: Mr. Kip Temple

Mr. Samuel Marderness	Mr. James Barnes	Mr. David Banaszak
Mr. Ken Miller	Ms. Teresa Telles	Mr. Rob Crist
Mr. Daniel Skelley	Mr. Sidney Jones	Mr. Raymond Faulstich

Air Force Flight Test Center
Edwards AFB, CA 93524-8300
Phone: DSN 527-1604/COM (661) 277-1604
Fax: DSN 527-6103/COM (661) 277-1623
E-Mail: kip.temple@edwards.af.mil

Please direct any questions to:

Secretariat, Range Commanders Council
ATTN: TEDT-WS-RCC
100 Headquarters Avenue
White Sands Missile Range, New Mexico 88002-5110
Telephone: (575) 678-1107, DSN 258-1107
E-mail usarmy.wsmr.atec.list.rcc@mail.mil

[1] Range Commanders Council. Telemetry Systems Radio Frequency Handbook. RCC 120-08. March 2008. May be superseded by update. Available at http://www.wsmr.army.mil/RCCSITE/Pages/Publications.aspx.
[2] Range Commanders Council. Telemetry Applications Handbook. RCC 119-06. May 2006. May be superseded by update. Available at http://www.wsmr.army.mil/RCCSITE/Pages/Publications.aspx.
[3] Range Commanders Council. Test Methods for Vehicle Telemetry Systems. RCC 118-12 Vol. 1. May 2012. May be superseded by update. Available at http://www.wsmr.army.mil/RCCSITE/Pages/Publications.aspx.

This page intentionally left blank.

ACRONYMS AND ABBREVIATIONS

µs	microsecond
%AR	percent actual reading
A	ampere
AC	alternating current
ADARIO	Analog Digital Adaptable Recorder Input/Output
ADC	analog-to-digital converter
ADT	air data transducer
AEEC	Airlines Electronic Engineering Committee
AGA	American Gas Association
ANSI	American National Standards Institute
API	American Petroleum Institute
ARINC	Aeronautical Radio, Incorporated
ARMOR	Asynchronous Recorder Multiplexer Output Re-constructor
ASME	American Society of Mechanical Engineers
ATA	Advanced Technology Attachment
AWG	American Wire Gage
AWWA	American Water Works Association
BC	bus controller
BCD	binary coded decimal
BER	bit error rate
BNR	binary
bps	bits per second
CD-R	recordable compact disc
CG	center of gravity
CIP	clean-in-place
cm	centimeter
CMRR	common mode rejection ratio
CPFSK	continuous-phase frequency-shift keying
CPU	central processing unit
CS	calibrated span
CTA	constant-temperature anemometer
CVSD	continuously variable slope delta
D/P	differential pressure
DADS	Digital Air Data System
dB	decibel
DC	direct current
DDS	direct digital synthesis
DITS	Digital Information Transfer System
DoD	Department of Defense
DVD-R	recordable digital video disc
EIRP	effective isotropic radiated power
EMC	electromagnetic compatibility
EMF	electromotive force
EMI	electromagnetic interference
EPLA	electric power load analysis

FIR	finite impulse response
FM	frequency modulation
fps	feet per second
FQPSK	Feher quadrature phase shift keying
FS	full scale
ft	feet
G	gauss
g	g-force, the gravitational force felt in acceleration
GaAs	gallium arsenide
GB	gigabyte
Gbps	gigabits per second
GF	gage factor
GPM	gallons per minute
GPS	Global Positioning System
GUI	graphical user interface
HVAC	heating, ventilation, and air conditioning
Hz	hertz
I/O	input/output
IAW	in accordance with
ICD	interface control document
ID	inside diameter
IDE	Integrated Drive Electronics
IEPE	integrated electronics piezoelectric
IES	Institute of Environmental Sciences
IIR	infinite impulse response
InAs	indium arsenide
inH_2O	inch of water column
IQ	Refers to IQ modulator approach and baseband I and Q data paths
IRIG	Inter-Range Instrumentation Group
ISA	Instrumentation, Systems, and Automation Society
JBOD	Just a Bunch of Disks
kbps	thousand bits per second
kVA	kilovolt-amps
kvar	kilovolt-ampere reactive
kW	kilowatt
LAN	local area network
lbs	pounds
LC	inductor-capacitor
LED	light-emitting diode
LRU	line-replaceable unit
LSB	least significant bit
LVDT	linear variable differential transformer
m	meter
MARS	Multiple Application Recording System
Mbps	megabits per second
MEMS	micro-electro-mechanical system
mg/l	milligrams per liter

MIL-#	Military Specification, # replaced by first letter of title
MIL-STD	Military Standard
ml/min	millimeters per minute
mm	millimeter
MPEG	Moving Picture Experts Group
ms	millisecond
MSB	most significant bit
mV	millivolt
NEP	noise-equivalent power
NIST	National Institute of Standards and Technology
nm	nanometer
NRZ-L	non-return-to-zero, level
ns	nanosecond
NSA	National Security Agency
NSN	national stock number
NTSC	National Television Standards Committee
PC	personal computer
pC/g	picocoulombs per unit of gravity
PCM	pulse code modulation
PCMCIA	Personal Computer Memory Card International Association
PD	positive displacement
PE	piezoelectric
PF	power factor
PFA	perfluoroalkoxy
PID	proportional-integral-derivative
PIN	positive-intrinsic-negative
PN	positive-channel, negative-channel
psi	pounds per square inch
PSID	pounds per square inch differential
PSIG	pounds per square inch gage
PVDF	polyvinylidene diflouride
QPSK	quadrature phase shift keying
RAID	Redundant Array of Independent Disks
RC	resistor-capacitor
RF	radio frequency
RMS	root mean square
RP	recommended practice
RT	remote terminal
RTD	resistive temperature device
RVDT	rotational variable differential transformer
RZ	return-to-zero
S/D	synchro to digital
SCADA	Supervisory Control and Data Acquisition
SCFM	standard cubic feet per minute
SCSI	Small Computer System Interface
SDI	source/destination identifier
SFID	subframe identification

SG	specific gravity
Si	silicon
SOQPSK	shaped offset quadrature phase shift keying
SOQPSK-TG	Shaped Offset Quadrature Phase Shift Keying, Telemetry Group
sps	samples per second
SSM	sign/status matrix
T	tesla
TIA	trans-impedance amplifier
TM	telemetry
TO	technical orders
TR	transformer-rectifier
UHF	ultra-high frequency
UPS	uninterruptible power supply
V	volt
VA	volt-amps
VAC	volts alternating current
var	volt-ampere reactive
VDC	volts direct current

CHAPTER 1

Introduction

1.1 Description of an Instrumentation System

In the broadest terms, an instrumentation system performs the functions of acquiring and presenting data to the user. A functional instrumentation system is a product of hardware, software, and processes employed to orchestrate the subsystem interactions to acquire and deliver data and/or information relating to a specific test or measurement event. The specifics on how an instrumentation system performs its functions will be covered in this handbook. In the context of the instrumentation system environment, the instrumentation engineer's product is data.

In many arenas, the terms instrumentation system, measurement system, and TM system are used synonymously, while in other arenas the terms are treated very differently. The broadest of these terms is perhaps the instrumentation system, which incorporates the measurement system and the transmission/reception system. A TM system is defined in the dictionary as any device for transmitting measurements of physical phenomena such as temperature and radiation to a distant recorder or observer. In practical terms, the TM system transmits the acquired data from one point to another usually using a wireless data link.

An instrumentation system can be divided into eight major functional sub-systems as shown in Figure 1-1. The transmission system includes the signal source, signal conditioning/ processing, multiplexing and encoding, and transmission/recording of the signal. The receiving system includes the receiving antenna and receiver, demodulation, recording and playback machines, demultiplexing, data processing, and display.

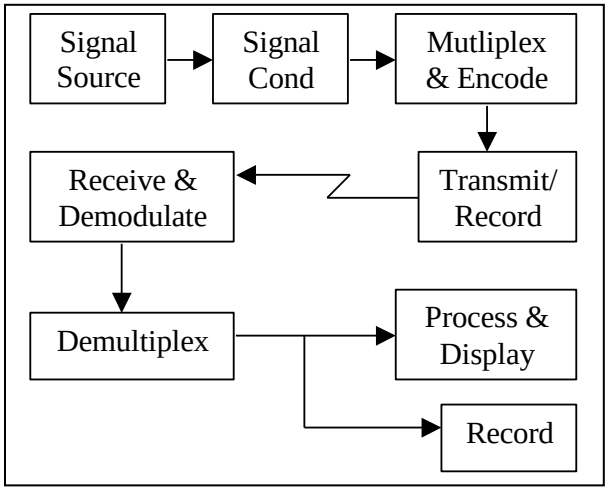

Figure 1-1. Sample Instrumentation System

To deliver quality data, the system definition generally begins with the design of a quality measurement system. The design and/or selection of the measurement devices are often the most difficult/challenging tasks in the design of an instrumentation system. The source signal may exist in a variety of forms, such as electrical, mechanical, acoustical, and thermal. Since measurement systems are designed to process electrical signals, the non-electrical source

information must be converted to an electrical form by using transducers. The transducer output and other forms of electrical source information are converted to more standard output forms using various types of signal conditioning equipment. Typically more than one measurement is required, and these are multiplexed prior to transmission or recording. Although many techniques are available, the most common are frequency domain and time domain multiplexing. The multiplexed (composite) signal is then transmitted to the processing station and/or recorded.

1.2 Typical Instrumentation System

A typical instrumentation system probably does not exist. Because instrumentation systems are generally unique and specialized, the instrumentation designer must tailor the design to a unique set of requirements. Rarely are two sets of requirements similar enough that the same design can satisfy both, although it is common to make minor modifications to an existing design to yield a system that meets a new set of requirements. Consequently, the discussion of a typical instrumentation system is rather difficult; however, a discussion of a notional instrumentation system, such as that shown in Figure 1-2, is instructive and serves as a good introduction to the major building blocks of modern instrumentation systems.

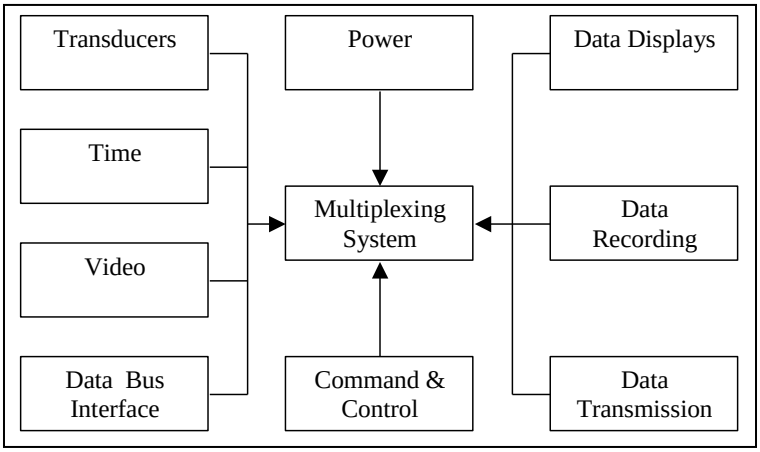

Figure 1-2. Notional Instrumentation System

The left side of Figure 1-2 illustrates the types and sources of information typically monitored and captured by an instrumentation system. In the last 20 years, the monitoring of information on data buses has become increasingly important. Some examples are Military Standard (MIL-STD) 1553, Ethernet, Fibre Channel, and proprietary data buses and digital interfaces. The old adage that “a picture is worth a thousand words” is applicable in the instrumentation environment; consequently the acquisition of video images is a common requirement. Transducers make up what is considered the traditional source of information monitored by an instrumentation system. Some examples of measurements made using transducers are loads, temperatures, accelerations, power, and positions. The monitoring of data buses, capturing of video images, and performing measurements with transducers, is of relatively little value without knowing when the data or image was captured or when measurement was made. As a result, one of the most critical inputs to the instrumentation system is time. Time is used to identify when monitored events occurred (both relatively and absolutely). Without time, knowing when events occurred and correlating events would be very difficult. Also, the system designer must remember to provide power to the measurement system.

The data being monitored and measured, such as data bus interfaces, transducer outputs, and time, are sent to the multiplexing system. The multiplexing system takes the numerous data inputs and multiplexes them in frequency or, more commonly, in time. The multiplexed data is then suitable for transmission to a remote location or for recording. In general, the data sent to the recorder will be in a different format than that sent to the transmitter. Recorders can either have analog or digital data inputs. When transmitting data over a wireless link, two types of transmitters currently exist; these are frequency modulation (FM) transmitters and those transmitters based on quadrature modulation techniques. All FM transmitters accept filtered digital data (analog data) while the quadrature modulation transmitters accept digital data.

Upon reception and/or demultiplexing, data may be sent to a data display for real-time viewing. The data display can take several forms, including a common computer monitor, strip chart, environmentally hardened liquid crystal display for use in extreme environments, to large and complex mission control rooms. The common purpose of the various forms of data display is to present the data in an accurate and easily understood manner.

It is important to note the above discussion is a description of a notional instrumentation system. Many of the details were intentionally left out in an attempt to give an overview of an instrumentation system. This handbook will expand upon the topics covered here and cover the details glossed over in this overview section.

1.3 Signal Sources and Sensor Selection Criteria

Almost anything one can think of is a source for a measurement. Temperature, battery voltage, vehicle speed, altitude, heart rate, wind speed, and rudder position are all examples of sources of measurement signals. For most of these sources, a sensor (or transducer as they are commonly called) must be used to convert physical energy into electrical energy. The electrical signals, whether it is current, voltage, or frequency are proportional to the physical energy they monitor. Serial information and MIL-STD-1553 data bus information can also be considered signal sources.

Selecting the right sensors from among the wide variety of sensors available on the market today depends on the particular need for the parameter being measured. Before selecting the sensor, the instrumentation engineer should address the following questions for each measurement task:

a. Type. Is there a transducer that measures your physical phenomenon?

b. Range. What are the maximum and minimum values expected to be measured?

c. Sensitivity. Is the ability to discriminate small changes in the measured quantity sensitive enough?

d. Accuracy. How close is the sensor to the actual value?

e. Repeatability. What is the ability of the sensor to reproduce an output given the same input?

f. Resolution. What is the smallest signal increment that can be detected?

g. Response Time. How fast (a value of time or frequency) can the sensor react to a stimulus?

h. Cost. What is the value for the amount paid while still meeting requirements?

i. System Integration. Is the output compatible with inputs to your data collection system?

j. Special Needs. Are there special mounting requirements, hazardous environments, or other special needs?

Initial planning should include a review all the above questions to determine which ones are applicable, and to identify the relative importance of some over others. For example, speed and accuracy usually come with a price, so knowing what is needed can help keep costs to a minimum. Special operating parameters and conditions may also dramatically increase costs, so determining how parameters are to be measured, in addition to what is to be measured, should be considered in the initial plan. The final determination of measurement requirements is usually a compromise of several parameters to fit within a specified budget. Knowing the exact measuring requirements is critically important to the selection of the correct sensors.

This handbook covers the most common types of signal sources and will provide advice/assistance in the selection process for the proper transducer(s). Common pitfalls and a discussion of a transducer data sheet will be discussed.

1.4 Signal Conditioning

Signal conditioning is the modification of a signal from a signal source to some final form. Modification steps can include amplification, filtering, sampling, digitization, data compression, digital formatting, modulation, correction factors, and conversion. This handbook will address signal conditioning for test instrumentation systems and use the definition that signal conditioning is any signal conversion between the signal source and the data capturing system. An example would be adding gain and offset to a resistive-temperature device (RTD) before it is time-sampled. Another example would be the capturing of a data word in a MIL-STD-1553 message stream and adding a time stamp before it is placed in a pulse code modulation (PCM) stream.

Signal conditioning can be categorized as either analog or digital. Analog signal conditioning can consist of amplification, attenuation, filtering, zero shifting, and compensation. Digital signal conditioning consists of converting a digital signal into another digital form for data capture, transmission, or recording. Digital signal conditioning can be as simple as parallel to serial conversion or as involved as MIL-STD-1553 data capture. The instrumentation engineer needs a thorough understanding of both analog and digital signal conditioning in order to perform his/her job effectively. Both types of signal conditioning will be explained in this handbook.

1.5 Data Collection and Pulse Code Modulation Formats

In an instrumentation environment, data collection is the process of gathering all the necessary information from a set of sensors (such as transducers, communications buses, etc.) and putting the information into an organized format. The newly formatted information can then be used by a data analyst to evaluate the performance of a system or event being tested. The system being tested could be as large as an aircraft, and the event could be as small as a chemical reaction. There are many data collection systems available, and choosing one depends upon many criteria, such as accuracy, cost, data rates, test environment, and space requirements.

The PCM formats, referred herein simply as formats, identify the manner in which data is organized and/or provided by an instrumentation system. Because formats may be recorded or transmitted for data analysis, the format of a data collection system must be programmed into the data collection system as well as provided to the data reduction analysts. After receiving the data requirements list from the project team, the instrumentation engineer needs to create a format in which all data is sampled at a high-enough rate to prevent loss of information. Bus data should be acquired at a rate just above the bus data rate. Analog data should be sampled at different rates depending on the type of data; for example, vibration data will generally be sampled at a higher rate than temperature data. When the format has been created, it is then programmed into the data collection system for testing. Following satisfactory completion of testing, the format is provided to the data reduction analysts.

1.6 Calibration

The purpose of a measurement system is to accurately measure the state of the unit under test. Measurements are accomplished by using a transducer to convert energy from some given form (such as force, displacement, or acceleration measurements) to an electrical signal that is conditioned for input to a data collection device. The transducer usually comes with a transfer (function) characteristic or sensitivity. The signal conditioner can be set up to receive a signal with a known input type and range and to convert that signal to a standard required by the data collection unit. Using information provided by the manufacturers of transducers and signal conditioners, an output could be calculated based on specific inputs.

If a transfer function of the system can be calculated, then the need for calibration might be challenged. The response is that the need to calibrate is based on the requirements for data accuracy. Because data accuracy is directly proportional to data acquisition cost, most system designers try to make the most of the system they have by applying known values to the unit under test (under specified conditions) and recording the results. There are two types of calibrations as described below:

a. Unit calibrations. Unit calibrations are done on each piece of equipment to verify they perform as the transfer function describes. If the results deviate from the transfer function, a new transfer function may be defined for that unit; in some cases, the device may be reset to conform to the original transfer function.

b. System calibrations. Many instrumentation engineers stop the calibration process after performing unit calibrations because the transfer functions have been verified. The transfer functions can then be combined mathematically with stated signal conditioner characteristics, thereby providing a good idea of what the data will look like; however, by performing a system calibration, the system characteristics can be quantified. System calibrations are also called “end-to-end” calibrations. They are performed after the system is installed in the test vehicle. A calibration source is used to stimulate the transducer, and if use of a calibration source is not practical, a simulator is used to stimulate the transducer. The system designer monitors the signal entering the data collection unit to ensure the calculated value matches the actual system transfer function. Since the system calibration is performed with the same measurement system (including wiring, connectors, routing, etc) as will be used during the test, many potential problems, such as phasing and wiring errors, can be identified corrected early in the process.

1.7 Telemetering

The TM method is used for sending information from one place to another. Examples of this method are cable modems, Ethernet, and even point-to-point serial communications. In the world of instrumentation, a TM system deals with the transmission of test data to some receiving station. The transmission method medium can be air or wire depending on the application. For this handbook, the system shall be defined as everything required to convert data from baseband to RF and back again. The TM actions include modulation of the baseband data (information signal), transmission, acquiring, receiving, and demodulation of the signal back into its original baseband form. On the test platform side, the TM system includes the information signal, any required encryption or pre-modulation filtering, TM transmitter, power splitter, and antenna(s). On the receiving side, the TM system includes the reception antenna, TM receiver, demodulator, decrypter, and bit synchronizer (referred to as bit sync).

Modulation is the process of attaching information to a carrier wave that involves the variation of one of the carrier-frequency characteristics. Traditional systems have used the method of continuous-phase frequency-shift keying (CPFSK), more commonly referred to as PCM/FM, to attach the information to the RF carrier. Another method utilizes a variation of quadrature-phase shift keying (QPSK) modulation techniques, which reduces the transmitted spectrum. The QPSK technique is mainly used in applications requiring higher bit rates.

Many parameters must be considered when designing or analyzing the performance of a TM link. These parameters include the following:

a. link margin;
b. error probability;
c. pre-modulation filtering;
d. transmitter deviation;
e. antenna location and patterns;
f. power split between antennas;
g. data rate;
h. antenna-tracking loops;
i. receiver set-up.

Although this handbook does not address all of the above parameters, it will familiarize you with some of them and how they affect a TM system.

The discussions in the following chapters address each of the TM subsystems, common design practices, and related pitfalls. Examples of typical systems will be presented to help you understand how a TM system is assembled and functions.

1.8 Recording

The majority of instrumentation systems include some type of recording device to analyze data after the completion of a test. Many types of recorders collect video and data

information. Determining which recorder will be used is normally determined from the required testing, space availability, power requirements, cost, and supportability.

Determining the requirements for the recording device is an important step in selecting the correct type and unit for the instrumentation system. When selecting a recording device for an instrumentation system, the following issues must be taken into account:

a. recording time;

b. data rate;

c. number of data streams;

d. space availability;

e. environmental conditions;

f. availability of funds;

g. playback capabilities of the customer.

This handbook addresses the current types of recording devices and gives the advantages and disadvantages of each type.

This page intentionally left blank.

CHAPTER 2

Typical Instrumentation System (broad overview)

2.1 Typical Vehicular System

Though a typical instrumentation system may not exist, this chapter gives a broad overview on what constitutes a vehicular and laboratory system. The purpose of this chapter is to provide an example of the design of a typical instrumentation system. As previously described in paragraph 1.2 of the introduction section, a typical instrumentation system is composed of several elements. Review Figure 1-2 for a description of a notional instrumentation system.

When a new test is in the planning stages, it is common to have at least a few meetings or teleconferences before testing begins. The number of meetings and how soon they are held is usually dictated by the scope and complexity of the test. During the meetings, topics such as time schedule, test plans, range support, and system operation will be discussed. If the instrumentation engineer is able to attend the meetings or be given copies of the minutes, then he will be better able to design and implement an instrumentation system to acquire the necessary data to meet the test requirements. All ranges have at least some of the components that make up the typical instrumentation system. Early planning will provide the instrumentation engineer with enough preparation time to acquire assets the range does not typically have.

The instrumentation engineer needs to know the answers to several key questions as soon as possible because early planning is the key to the successful deployment of an instrumentation system. Sometimes education, experience, and common sense “suggest” the right solution to questions such as:

a. What measurements are desired and how often (i.e., sample rate)? Many times, the answer may not be known by the program manager or even the lead test engineer.

b. How soon does the data need to be available to the customer? Depending on the scope of the test, the data might be needed in real time (immediately), post-test (perhaps within a day), or much later as with a final report (several days to weeks).

c. Can vehicle power be used for instrumentation purposes?

d. Where can the instrumentation be mounted?

e. How much space is available?

f. Is there a weight limitation?

g. In what type of environment will the instrumentation and transducers be exposed?

h. Will access to the test item be provided prior to test in order to take measurements, make drawings, acquire sample data, etc.?

i. Are interface control documents (ICDs) available pertaining to the test item electronic systems, in particular any describing data buses? These two questions are particularly important since long-lead items, such as mechanical fixtures and instrumentation cables, may need to be fabricated. In addition, if there are any data buses on the test item, we

need to make sure our instrumentation system can interface to them. This may require some long lead times if new hardware and/or software must be designed and/or procured.

j. Are there any communications systems that will be used on the test item?

k. Can an instrumentation antenna be mounted on the test item?

l. Is there a real-time requirement for system control?

2.1.1 Hypothetical system design

For our example design, we will assume that you were invited to a test planning meeting to discuss the test requirements of test item "XYZ." Several topics discussed during the meeting are outlined in the following subparagraphs.

2.1.2 Measurements

The following measurements were noted as desired for the test:

a. engine air intake temperature;

b. test item speed (will be available from a system data bus);

c. test item main power supply voltage, +28 volts direct current (VDC);

d. test item vertical acceleration.

2.1.3 Video camera output

We also learned that the system has a sighting system with a standard RS-170, National Television Standards Committee (NTSC) camera installed. The video camera output must be recorded during the test, and the output will be available from a test jack for this purpose.

2.1.4 Initial questions

After asking the questions in paragraph 2.1 above, we were given the following answers and information.

a. Power. Yes, +28 VDC vehicle power can be used for instrumentation purposes – as long as it's reasonable. Reasonable is obviously a relative term. In the context of a classical voltmeter, we want the instrumentation system to influence or affect the test item to a minimum. So if the test item has several auxiliary power outlets, rated at various load capacities, it is probably fine to attach to one of them suited for the current required by the instrumentation system. On the other hand, if the test item power budget is tight and there is little power to spare, then batteries or some other auxiliary power source may need to be used to supply part or all of the power required for the instrumentation system.

b. Storage. A storage area (approximately 3 feet (ft) x 2 ft x 1 ft) inside the test item can be used for instrumentation mounting purposes. We will need to assemble our instrumentation system components on a bench (or use a three dimensional representation) to make sure this space is adequate. If it is not, can some of the items be possibly re-packaged or combined? Will there be enough air space around the components for heat dissipation? Are heat sinks required? Is there any airflow between our compartment and the rest of the test item? Will we need to think of some auxiliary airflow, perhaps a fan? Is there enough space for connectors and cables to be routed? Do we need to provide shock mounts for our instrumentation system?

c. Storage weight. The storage weight is not to exceed 30 pounds (lbs). We will need to weigh our instrumentation system components and make sure the total weight does not exceed 30 lbs. If we do exceed 30 lbs., can the instrumentation enclosures be made of lighter weight materials, like aluminum instead of steel? High-impact plastic instead of aluminum?

d. Monitoring and display. A parameter that needs to be monitored in real time for test safety purposes is speed. Real-time display of the other parameters is not critical. At a minimum, we will need to provide a real-time dedicated channel to display the speed of the test item. If the RF channel bandwidth permits, we'll attempt to display all of the data, even though it will be at a much-reduced rate for visual check (perhaps around 2 hertz [Hz]). Display can be accomplished via a dedicated PCM/FM TM package, through a serial RF modem, or possibly through an 802.11x wireless Ethernet transceiver. The method of RF connectivity varies depending on the capability of the instrumentation system and the ground station infrastructure of the test center. For testing of aeronautical systems, telemetered data utilizing PCM/FM methods is preferred.

e. Data recording. An RF connectivity, spectrum availability, and the test center's policies are all factors that need to be considered for data recording. We also need to decide if we need to record all of the data immediately on the ground or if we can record the data on-board and just transmit what's needed to be viewed in real time. The term "ground" is used here as a relative term and generally refers to the place where the data is received, viewed, and possibly archived.

   The data needs to be recorded at 500 Hz. When a statement like this is made, people generally mean that they want to be able to look at data that is presented at a rate of 500 Hz (i.e., every 2 milliseconds [ms]). With a knowledge of sampling theory, we know this means we'll have to sample the accelerometer data at least twice that fast, 1000 Hz, and probably should consider 2000 Hz or even higher, especially if peak acceleration or spectral information is of interest. If only peak information is required, we will then employ a Butterworth low-pass filter in our signal conditioner and set it to 500 Hz. Now, we also know (or will be told by the local senior technician rather sternly) that recording the engine intake temperature at 500 Hz is ludicrous. Except for special circumstances, temperature is among the least dynamic of all measurements of concern to the instrumentation engineer. If our instrumentation system will accommodate different sample rates (also sometimes called scan rates or scan groups) for our data channels (and most will) we will record this temperature at 1 Hz. If using a PCM encoder, this can be accomplished with subframes or supercommutation of particular data words. Inter-Range Instrumentation Group (IRIG) Standard 106[4] should be consulted for issues pertaining to the format and structure of PCM data.

f. Data turnaround-time. All recorded data should be available to the customer within a week of when it was originally acquired. We need to ensure that the data collection process within our organization can accommodate this. Hopefully, some of our instrumentation already has some smarts built-in, such as limit checking, etc. A time to quality-check of the data needs to be performed before releasing it to the customer.

[4] Range Commanders Council. Telemetry Standards. IRIG Standard 106. June 2011. May be superseded by update. Available at http://www.wsmr.army.mil/RCCSITE/Pages/Publications.aspx.

Hopefully, the quality-check will have already been accomplished to some extent by viewing some of the data in real time. Post-test processing to include wild-point (invalid samples) editing and statistical data validation prior to data-basing should finalize the quality-check. A successful quality-check will occur if we plan carefully, calibrate properly, and encounter any anomalies.

g. Monitoring speed. An ICD is available from the system contractor (who built the test item) for your use. The test item speed from the vehicle data bus is described in the ICD along with a test jack where we can monitor the signal. The vehicle data bus is one with which we are familiar and have interface cards that we can use with our instrumentation system. Since the data bus has inherently digital data, there is no signal conditioning, per se, required. Instead, the instrumentation system interface card for this type of data bus will allow us to monitor (listen to) the data bus and read only the parameter we are interested in speed. Attention must be paid to proper cable and termination impedance as required.

   Isolated, transformer coupled bus stubs will sometimes be provided for monitoring purposes, but not always. We obviously don't want to disrupt the bus we're trying to monitor. This could have serious implications to both the instrumentation system but more importantly the item under test.

h. Recording data bus traffic. There are situations where the complete data bus traffic, including overhead bits and bytes, must be recorded in its entirety for possible reconstruction during post-processing. Chapter 8, IRIG Standard 106 describes the complete capture of data from a MIL-STD-1553B bus type. The test requirements will dictate to what extent the bus traffic is captured.

i. System voltage. The system voltage at the test jack is a direct, unfiltered signal. It will need to be attenuated prior to sampling with our analog-to-digital converter (ADC). Currently, most ADCs on the market are set up for +10 volt (V) input, with 12-bit resolution. Therefore, we'll need about a 3:1 attenuator (gain of 1/3) to get the +28 V signal to work with our ADC. A 4:1 attenuator may be a better choice to accommodate any slight overvoltage or transient conditions. The attenuation is accomplished within our signal conditioner via a resistor voltage divider. Remember the sampling criteria when setting the filters and sampling the voltage.

   The test jack connector part number is supplied along with a connector pin-out functional description. We can see if these connectors are ones normally stocked by our local supply room. If not, then we need to get these on order. If a national stock number (NSN) is noted for the connectors, they can be ordered through the government supply system. If no NSN is available, then these connectors will need to be procured from a commercial vendor. Sometimes these can be long-lead-time items and quite expensive; your local electronics store will not have these on the shelf.

2.1.5 Additional questions

After we initially learn of what measurements are desired for the test, there are still a few more issues that we need to resolve, such as:

a. What range of temperatures is expected? We may be able to answer this one ourselves; if the test will occur at our own test center, we would be familiar with the local climate and the normal temperature range for specific times of the year.

b. Let's assume the test item will be operated at ground level at our test center in the continental US in the summertime. A temperature range of 40°F to 120°F should cover the expected range. Our instrumentation system has interface cards to accommodate K- and T-type thermocouples. For this rather low temperature range, we'll go with a T-type thermocouple.

c. What is the expected range of vertical acceleration? This is usually expressed in g forces, referring to Earth's gravitational acceleration constant (g) of 32 feet per second $(fps)^2$ (9.8 meters [m] per $second^2$). We are given an answer of "no more than 5 g's". When vertical acceleration of a test item as a whole body is to be measured, the measurement is usually done at or as close as possible to the center of gravity (CG) of the item. Luckily, the test item CG is located within the area approved for us to mount our instrumentation.

For the vertical acceleration channel, we will use a piezoresistive or variable-capacitance-type accelerometer from our supply room, rated at 10 g maximum, with a "flat" frequency response out to >500 Hz.

The piezoresistive or variable-capacitance-type accelerometer will give us direct current (DC) response (easy field checkout using earth g flip test) and enough headroom to accommodate the 5 g maximum stated at the previous meeting. We will need to get the calibration sheet for the unit to set up the gain and calibration resistors properly within our signal conditioner. The calibration sheet should have a frequency response plot, a sensitivity value expressed in mV per g, and at least one resistor value that, when placed across two of the output pins of the accelerometer, will simulate a particular g level. This resistor value can be used in our signal conditioner during our own instrumentation calibration procedure prior to test to check our gain setting and establish our ADC sensitivity and offset values (i.e., g's per ADC count and g's respectively). These terms are also sometimes referred to as scale factor and offset. In mathematical terms, these are the slope and y-intercept of a line. We are dealing with a linear transducer and instrumentation system at this point. What follows is a procedure for the set-up and initial calibration of our typical instrumentation system for this channel. This procedure in general can be followed for setting up any analog transducer channel.

Let's assume for this example that our accelerometer has a stated sensitivity of 15 mV/g. Recall that our ADC has a range of +10 V. Also, let's assume that our signal conditioner has binary (BNR) gain steps (i.e., 1, 2, 4, 8, 16, 32, …2048). This is a fairly common situation. Unless you want to build custom instrumentation amplifiers for each channel, you will have a discrete number of gain choices - and filter choices for that matter - from which to choose. If we do the math, we can see that the largest gain we can use and not risk clipping would be 64.

$$\boxed{150V\,(peak\,output@10g) * 64 = 9.6V} \qquad \text{Eqn. 2-1}$$

If we assume for a moment that our ADC is perfect over the entire range and that we are set up for a 2's complement output format, then 2048 counts / 10 V = 204.8 counts /V, which means for a 9.6 V input we should see: 9.6 V * 204.8 counts/V = 1966 counts

We don't really care to see raw counts, so we will calculate the engineering units scale factor as follows:

$$\boxed{10g/1966\ counts = 0.0051g/count} \qquad \text{Eqn. 2-2}$$

This is our theoretical ADC resolution in terms of engineering units for this channel.

We are off to a good start, and if we're lucky, the ADC resolution is fairly accurate; however, the ADC is probably not exactly 204.8 counts/V, the gain is not exactly 64, and the output from the signal conditioner may not be exactly 0 volts when there is no acceleration. So what do we do? This is where the calibration resistor comes into play. On the calibration sheet, the resistor value will be shown representing a particular g level when placed across two pins of the accelerometer. This may be an actual shunt resistor placed across one leg of a Wheatstone bridge, or it may be part of an internal circuit of the accelerometer designed specifically for calibration. In either case, we can place this value, using a precision resistor, into our signal conditioner. If the accelerometer is a Wheatstone bridge-type device, the bridge should be balanced through the signal conditioner.

In the past 5 years or so, many signal conditioners incorporate auto balance circuits for such purposes. In either case, the end result is that with zero acceleration, we ideally want to see zero g displayed. Anything other than that will be treated as an offset. This is akin to the y-intercept of a line. This goes hand in hand with the scale factor we came up with earlier. Now, if we place the resistor across the specified leads of the accelerometer we should see a simulated g level according to our calibration sheet. For this example, let's say according to the calibration sheet, it is a 50k resistor and it simulates an 8 g level. When we command our signal conditioner to make this connection, we see 7.5 g displayed. If we go back to displaying raw ADC counts, we can adjust our scaling factor accordingly to obtain 8 g on our display. We see 1471 raw counts. Re-scaling yields 8 g/1471 = 0.00544 g/count.

Now when we simulate 8 g, we indeed get very close to 8 g. If we now switch our signal conditioner back to normal operating mode, with the accelerometer at rest, we should see zero g displayed. If not, we can try re-balancing, or live with it, and take it into account as an offset. We have now essentially completed a two-point calibration of our instrumentation system for this channel using zero g and a simulated 8 g as our two points. We could also refine our calibration further by adding a few more calibration points by either adding one or more calibration resistors, and/or conducting a simple 1 g flip check by using earth's gravity. The flip check will only work for accelerometers that have a DC response. Also note that the sensitivity will probably be a little higher at DC than out on the curve. Check the calibration frequency response curve for this data. The majority of transducers that the instrumentation engineer will use do have a linear response. One of the exceptions is the thermocouple.

The T-type thermocouple we have chosen to measure the engine intake air temperature has a non-linear voltage/temperature response. Thermocouples are dealt with in detail in the Signal Sources section of this document. Suffice it to say that thermocouples have a very low output level and are non-linear in nature. To account for this, there are specialized thermocouple signal conditioner modules developed for the vast majority of instrumentation systems available. These modules provide gain, filtering, and sometimes even linearization prior to the ADC.

There are different modules for the different types of thermocouples and usually several choices of gain to accommodate various temperature ranges. We will choose a gain that will provide a range to cover our 40°F to 120°F measurement requirement. Keep in mind that there probably will not be a gain setting available to exactly match this range. This is true for just about every analog channel we have to set up. If our thermocouple conditioner module does not provide a linearized output, then our engineering unit scaling factors will be comprised of a series of coefficients, usually 5 to 7 in total, to satisfy the non-linear function. These are standardized for each type of thermocouple and are readily available.

The instrumentation engineer must choose what is available (or design and/or procure something new) to best fit the situation. The gain choice should provide adequate "headroom" in the case of an unexpected (but possibly very important) out of range value; however, the tradeoff is resolution. There is no hard and fast rule here. Organizations tend to develop their own rules of thumb over time. Generally, allowing for 20 – 50% above expected values is typical. If we exceed the limits of our ADC (in this example +10 V) then we will clip the signal and our ADC output would be saturated at its limit (2047 or –2048 counts respectively, for a 2's complement output format; 4095 or 0 counts respectively, for an offset BNR output format).

To record the video from the test item sighting system, we'll either need to put a VCR on-board the test item or telemeter the video with a TM transmitter. We may also have access to a digital video device, in which we can use a trigger event to capture only a segment of video about a specific test event. In either case, since the video will be used with the rest of the data we're recording, we'll want to use time information to synchronize the two. If an IRIG time source is available from our instrumentation system, we can either insert this into the video directly, or record it on one of the audio soundtracks for conversion later at playback. It may be that we use a Global Positioning System (GPS) time receiver and use this as our master clock. This will give us synchronization across many test items. This is particularly useful when multiple, independent test items are interacting during a given test.

Note in the diagram shown for our typical instrumentation system example that there are several places where arrows point both ways. This is because it is becoming more common that an instrumentation system is networked, and information does not just flow one direction. Our RF link may not just provide the data we need to view and/or record in real time, but also allows us to command and control the signal conditioner and the multiplexer configurations on-the-fly. A networked instrumentation system provides the most flexibility in this regard.

Figure 2-1 below depicts what we assembled to accomplish this simulated requirement.

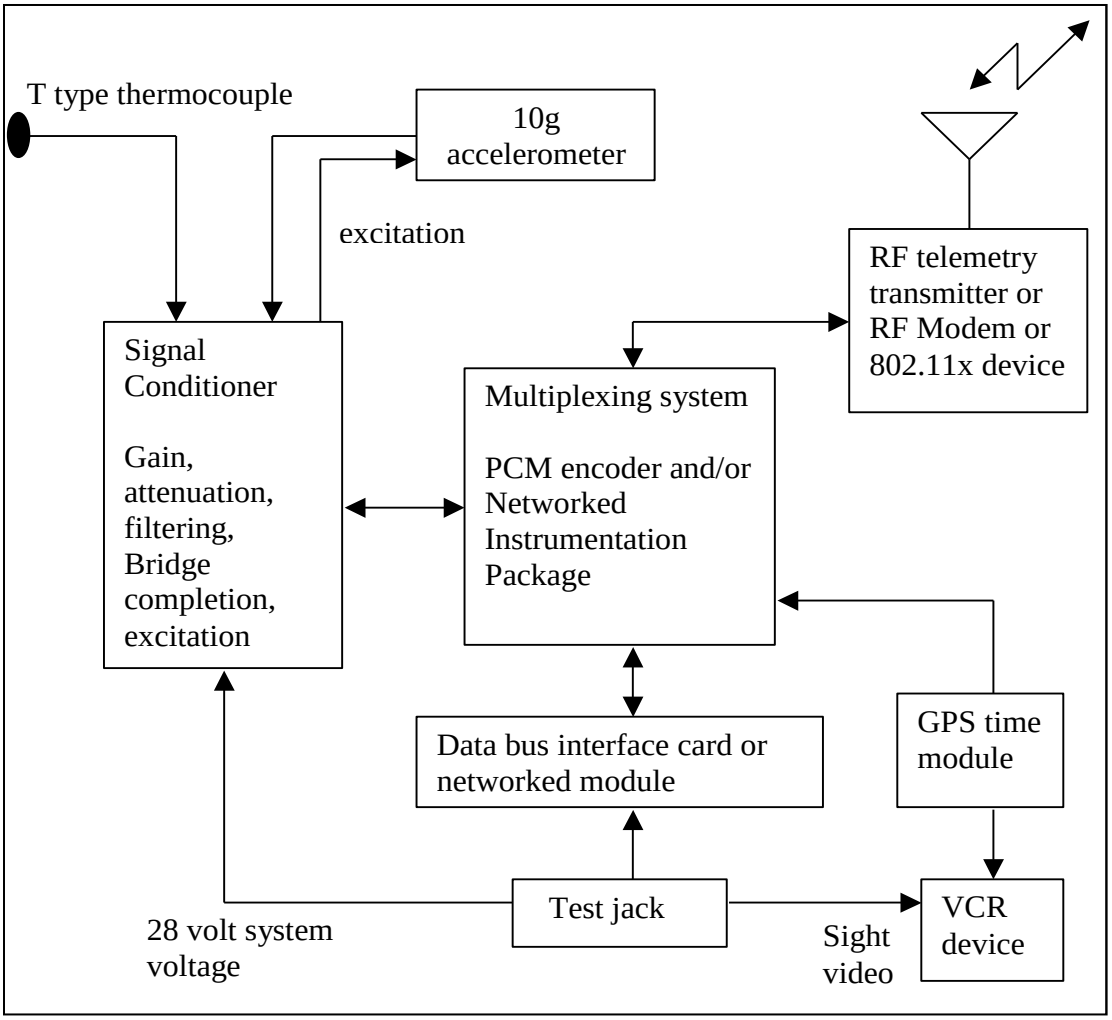

Figure 2-1. Required Typical Instrumentation System

2.2 Typical Laboratory System

Successful testing in a laboratory environment will continue to be a challenge to the instrumentation engineer. Success depends on adequate technical expertise, state-of-the-art instrumentation, control processes, data acquisition, facilities, and capabilities to plan, conduct, analyze, and report results of developmental, operational, production, and evaluation testing of a wide variety of material. There is also the requirement to create, as closely as possible, a realistic situation while simultaneously causing external changes in conditions in order to observe the responses of the system.

2.2.1 Application requirements

Current and new technology has provided the instrumentation engineer with a proven way of transforming the way test data is collected, displayed, processed, and reported in a laboratory environment. New technologies in communications, process control, test production, graphical displays, and data acquisition have enabled test data and reports to be collected, processed, and disseminated in a timelier manner and with increased assurances of the produced data. These new technologies have also provided the user with the capability to monitor and

disseminate this test data in real time through advancements in the Internet, Intranet, and through the continuing evolution of the wireless Ethernet.

2.2.2 Operational requirements

Current chemical, biological, and other laboratory test mission requirements dictate the real need for testing a wide variety of material to be used by both the Armed Services and civilian authorities in as near or actual environment as is possible. This requires the use of certified laboratory and chamber infrastructures specifically developed for this type testing. Process logic controllers, graphical user interface (GUI), and data acquisition for these chambers and laboratories and the test processes is achieved in most cases by utilizing state-of-the-art, off-the-shelf technology already developed and widely used by private industry in areas of chemical processing, nuclear and fossil fuel electrical generating plants, and the oil and petroleum industries. A supervisory control and data acquisition (SCADA) system incorporates new technological advancements in software control and data acquisition that also utilizes Process Logic Control technology. These same systems are designed to integrate with advanced hardware specially designed to mate and communicate with a wide variety of instrumentation, including "smart transducers." Because many tests in the laboratory arena are not strictly Department of Defense (DoD)-sponsored, a greater amount of flexibility is required in the data acquisition, display, and process control method.

2.2.3 Supervisory control and data acquisition requirements

The SCADA systems used to perform this type of testing must be a full-function human/machine interface SCADA package capable of industrial process monitoring and control applications and it must be an event driven system based on peer-to-peer client/server technology. This means that individual functions are divided into two subsystems, servers (data acquisition, data generation, and data storage) and clients (data display and presentation). Any number of clients and servers can operate independently and simultaneously on the same computer or on several computers linked by a high-speed network. The SCADA systems have built-in drivers that offer several different types of interfaces to connect to third-party input/output (I/O) systems such as OPTO-22, Allen Bradley, and Moore. Clients also use Active X controls and Dynamic Data Exchange to link data to and from other applications. They can be designed for both small- and large-scale process monitoring and logic control schemes. Industry SCADA systems are ideal for applications that require several GUI screens and remote terminals (RTs) for monitoring and man/machine interfacing.

2.2.4 Software and hardware architecture

Current technologies, both software and hardware, offer a wide range of capabilities and future technology will greatly increase these capabilities, thereby expanding the instrumentation engineer's ability to further test current and future DoD and civilian material. Present and future test requirements dictate SCADA systems be capable of controlling test environment parameters such as pressure, temperature, humidity, airflow, motor control, valve control, fluid levels, and agent dissemination. These same SCADA systems at the same time must provide the capability to perform complex algorithm formulas and math functions, while simultaneously collecting, processing, displaying, and archiving large amounts of test information over extended periods of time. These SCADA systems often require the ability to manage and collect information from an excess of 300 instruments/sensors with a processed output in excess of 500 channels of information. In addition, test parameters may dictate other instrumentation needs, such as instrument control, optical alignment/positioning, high-speed (snapshot) data collection, and

initiating third party programming routines. The total instrumentation package also must have the ability to change program definitions, add or delete instruments, add or delete and modify channel information, and modify test control parameters, all with little or no lead time and causing no effect to the laboratory or chamber environments.

2.2.5 Components and usability

Present testing standards require Ethernet compatibility with data transfer, communications, and operability from remote test stations. Real-time data monitoring and viewing large test infrastructure processes with a process controller requiring little or no human interface for precise control of environmental parameters is also a high priority. The SCADA system must also provide precise data acquisition for desired data points, the capability of either remote operability via Ethernet and/or a stand-alone capability, electronic data transfer, data processing, a data archival ability, security programmability, and communications with a wide variety of industry standard instrumentation.

System components would include the components listed below. Each of the components should be able to be upgraded independently of each other without affecting the other components as new technologies are developed.

a. Pentium® desktop or laptop computers with Ethernet capability
b. industry-standard SCADA software
c. industry-standard hardware platforms with standard Transmission Control Protocol/Internet Protocol communications protocols
d. industry-standard instrumentation

In addition, current and future field laboratory testing standards will require the use of wireless Ethernet, which allows real-time monitoring and process control from remote locations, electronic data transfer, and the ability to merge various data acquisition systems into a central command location the same as a local area network (LAN). This all allows for tighter control of the test process. These data acquisition systems include meteorological information systems, video and audio data collection systems, GPS, timing, time, space, and position information, and any status information or data channel information contained within the SCADA system.

These SCADA systems, along with their associated hardware and architecture also must have the added benefit of being reusable for future testing. Once installed, these systems must have the capability to be easily modified to accommodate the multitude of different test requirements, parameters, instrumentation, and test devices. They must also be easily relocated from one test site to another, be installed in a relatively short time period, and take up a minimum of space. These enable the greatest of cost efficiency and use of test resources.

2.2.6 Templates and indirect tags

Industry SCADA packages are required to have graphical objects that can be used over and over in an application or copied to another application. Changing the links in a cell needs to be fast and very easy. In addition to smaller graphical objects, entire windows can be used for multiple purposes by using scripting and indirect tags. In the case of an environmental control, for example, one window can be created and used as a proportional-integral-derivative (PID) tuning window for all the different PID loops with another window for data monitoring only.

2.2.7 Scripting

In industry-standard SCADA systems, scripting is a powerful tool and is used for performing calculations or logic functions. Scripting gives more functionality with one button than just standard links. Scripting provides the user with much more functionality with recipes, alarms, redundancy, etc. Security features can also be programmed with scripting.

2.2.8 Communications

In most strictly data acquisition systems, clock-driven communications are used. These clock-driven communications tie up central processing unit (CPU) resources when the display is in use. Multiple display clients read the same data from the CPU multiple times, which further burdens the system and the controller.

Industry-standard SCADA package drivers are interrupt-driven and do not use as much of the CPU time for communications. By configuring one CPU as a data server, data is read from the controller more efficiently than most other types of data acquisition systems.

2.2.9 Redundant displays

In a properly configured SCADA system, with scripting, the user has complete control over the behavior of redundant stations.

2.2.10 Historical trend data

Within industry SCADA packages, historical trending is accomplished very efficiently, with smaller files and with little or no loading of the CPU. This efficiency is a prime reason for the development of the SCADA system by private industry.

2.2.11 Recipes

The SCADA packages have tools and utilities built for creating and using recipes. The recipes are in a comma-separated variable file that can be easily edited using Excel. The SCADA package recipe files are easier to create and manage than the standard data acquisition systems. With the SCADA package scripting ability, there is a greater control over recipe functionality.

2.2.12 Alarming

The SCADA systems' alarms are generated from data in the database and do not cause an increase in communications to the CPU or controller. There is greater alarm functionality in SCADA packages, more that can be done to display and report the alarms, and scripting can access alarm information, so actions can be performed on alarm conditions. This is especially important where testing can cause life-threatening situations.

This page intentionally left blank.

CHAPTER 3

Signal Sources

3.1 The Starting Point

The initial point in an instrumentation system is usually the signal to be measured. This signal can be from a transducer, a voltage, a current, etc. This section will introduce a few common types of signal sources found in both vehicular and laboratory instrumentation systems.

3.2 Strain Gages

Experimental stress analysis has been employed in the development of practically every mechanical assembly since about 1940. This is due to the advent of the bonded wire strain gage. Today, the vast majority of strain gages are constructed from etched metallic foil. Gages can also be constructed from doped semiconductor materials. These produce a relatively large output signal; however they are also sensitive to temperature changes. In any case, the strain gage is used to measure mechanical strain from which mechanical stress can be calculated. In addition, strain gages can be applied in configurations to measure load, torque, pressure, and vibration. This section will act as an introduction to the typical uses and configurations of strain gages that the instrumentation engineer is likely to encounter and use in the testing of various mechanical structures. Several excellent texts and websites exist with more in-depth coverage. These are listed in Appendix A. A discussion on the types of stresses and their relationship to strain follows.

3.2.1 Strain and stress

Strain is the amount of linear deformation of a body in a given direction divided by the original length in that direction due to an applied force as shown in Figure 3-1.

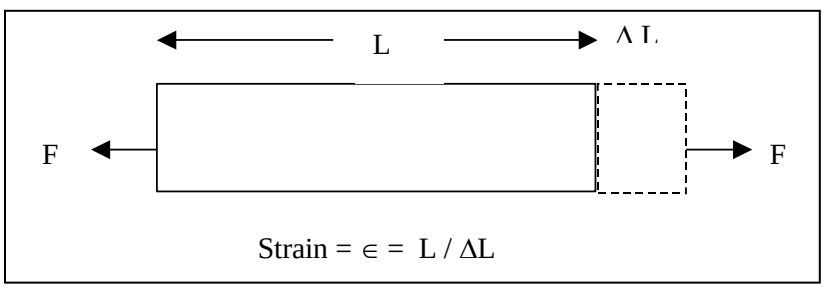

Figure 3-1. Stress and Strain

Thus, as defined, strain has units of inch/inch, which is mathematically dimensionless; however, to maintain the physical significance of strain, the units are written, albeit in a slightly different fashion. For most metals, the strains measured will be less than about 0.005 inch/inch. Since these values are quite small, they are usually expressed in micro-strain or $\in$ x10^6. Therefore, 0.005 inch/inch is usually written as 5000 $\mu\in$. Strain values may be tensile (positive) or compressive (negative).

As discussed to this point, strain is the fractional change in length and is directly measurable. Strain of this type is also referred to as normal strain. Another type of strain is shearing strain. Shearing strain is most easily visualized by applying a force to the topside of a

book laying on a countertop and observing the net change in the position of the top edge with respect to the bottom edge of the book. As shown in Figure 3-2, the shearing strain γ is defined as the angular change in radians between the two line segments that were orthogonal in the un-deformed state. Since this angle is very small for most metals, the tangent of the angle approximates the shearing strain.

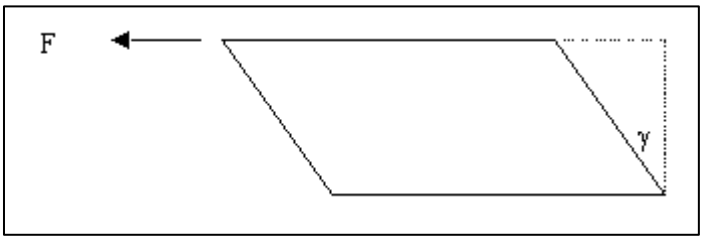

Figure 3-2. Shearing Strain

As a material is strained along one axis, another occurs transversely. The result is that for a tensile (or compressive) force that strains one dimension, the corresponding transverse strain reduces (or increases) the girth of the material in proportion. This phenomenon is known as Poisson strain (Figure 3-3). Interestingly, there is no stress associated with Poisson strain. This will be explained shortly.

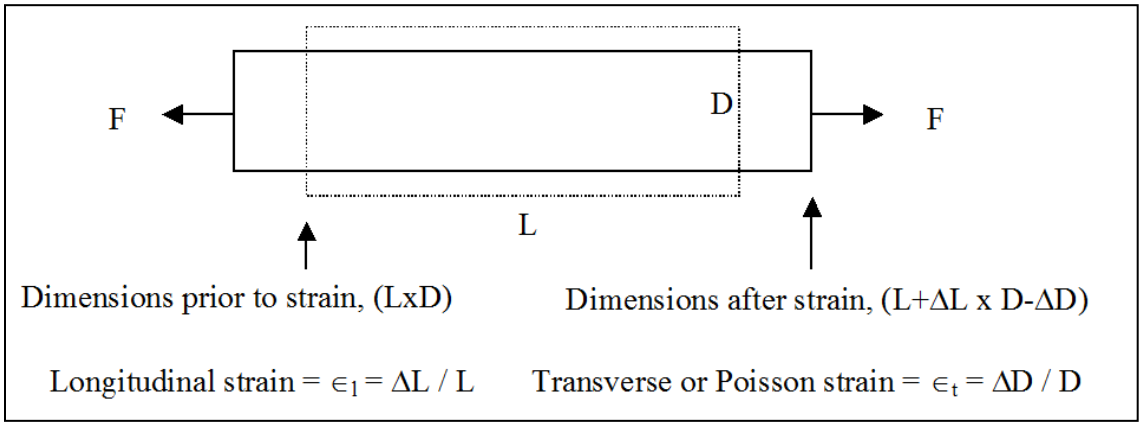

Figure 3-3. Poisson Strain

The amount of this contraction (or expansion) is a basic property of the material being strained, and is known as the Poisson ratio ν (expressed as $\nu = -\epsilon t / \epsilon 1$). The value for ν is in the neighborhood of 0.3 for most metals and is dimensionless.

Stress is the term used to compare the loading applied to a material with its inherent ability to carry that load. Since it is usually desirable to keep parts as small and light as possible, they should be designed to withstand stress in service to the highest permissible level without permanent deformation. For most applications, this would be just short of the yield point of the material also known as the proportional limit, where further strain will result in a permanent deformation (or strain) in the material.

The stress-strain relationship of most metals is shown at Figure 3-4. The linear portion described by Hooke's Law is the desired service range of the material and the slope is equal to the modulus of elasticity (also known as Young's modulus) of the material.

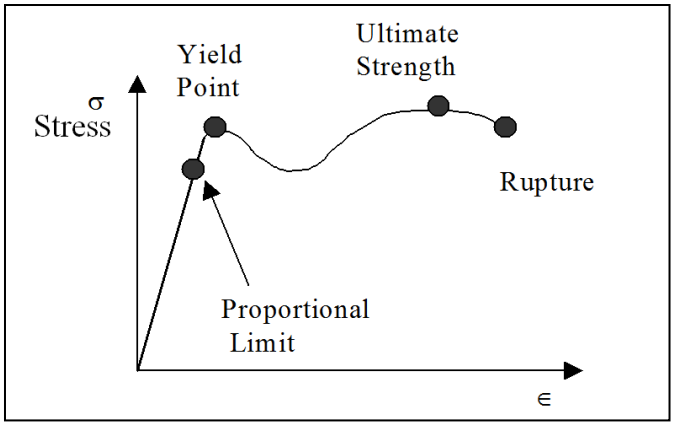

Figure 3-4. Stress-Strain Relationship

The equation for the linear portion is $\sigma = E \times \in$ where E is the modulus of elasticity for the material and σ is stress. E and σ are usually expressed in units of pounds per square inch (psi). Most metals have E values in the range of 10,000 to 30,000 psi. Normal stress is defined as the force per unit area or $\sigma = F/A$. Normal stress is perpendicular to the cross-sectional plane of the material and is tensile (see Figure 3-5). No stress exists in the orthogonal direction since there is no force component in that direction. Only Poisson strain exists in that direction.

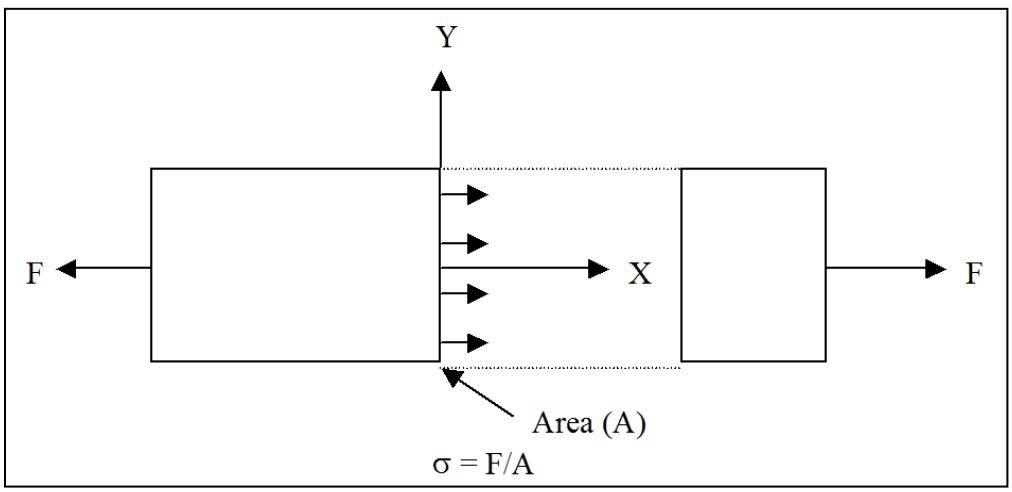

Figure 3-5. Normal Stress

Shear stress is a direct result of shear strain. Where normal stress is perpendicular to the plane of interest, shear stress is parallel and is represented by the symbol τ.

In Figure 3-6, the plane of interest is no longer perpendicular to the direction of the applied force. Therefore, the applied force can be broken down into vector components with F_n being normal to the plane of interest and F_t being parallel to it. The plane of interest has a cross-sectional area of A′ and has both normal and shear stresses applied. The stress values are:

$$\boxed{\sigma = F_n / A' \, and \, \tau = F_t / A'} \quad \text{Eqn. 3-1}$$

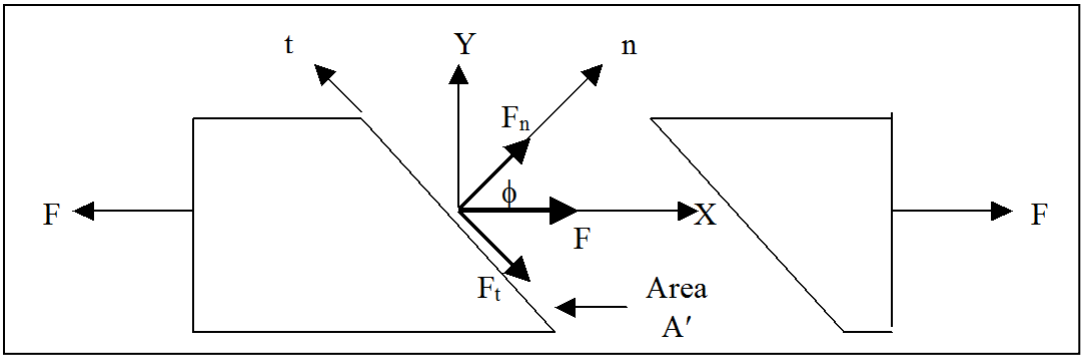

Figure 3-6. Shearing Stress

It should be noted that the force was broken down into vector components, not the stresses, and that the resulting stresses are a function of the orientation of the section. Stresses and strains have both magnitude and direction, but are not vectors and hence do not follow the laws of vector addition. Stresses are not directly measurable, but are derived quantities computed from measurable strains and known intrinsic properties of the material under stress.

The stresses discussed to this point have been the result of uniaxial applied force and could be computed using standard statics equations (equations of statics) without the need of measuring strain. In the real world, most stresses are biaxial in nature. Furthermore, the directions of the applied forces and the resultant stresses are usually unknown. The simple relationship of Hooke's law no longer applies since Poisson strains now exist in all directions. Another set of equations must be developed to quantify these stresses. In the previous stress-strain diagrams, the x-y axes are also the principle axes. The principle axes are by definition the axes of maximum and minimum normal stress. The maximum and minimum values of stress will always be found at right angles to each other. The principle axes also have zero shear stress for planes that are parallel to them. The principle axes are very important in stress analysis since the magnitudes of the maximum and minimum normal stresses are usually the quantities of interest. Once the principle stresses are known, the normal and shear stresses in any orientation may be computed.

Fortunately, if the strains are measured in any three directions at a point, the principle axes (*p*, *q*) can be determined and hence the normal and shear stresses. For the case in which the directions of principle strain are known, such as in Figure 3-7 below, two gages will suffice. For the least error in determining the directions of the principle axes, the gages should be oriented so that a relatively large angle exists between them; for accomplish this, prefabricated two- and three-gage assemblies, known as rosettes, are used. Typical examples, shown below, are magnified for detail.

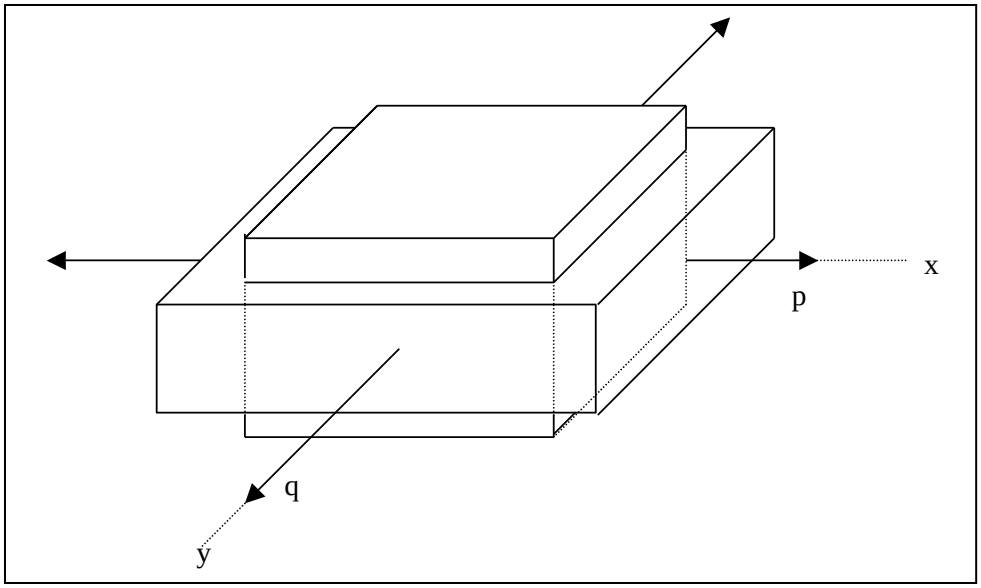

Figure 3-7. Bi-Axial Strain

Figure 3-8 shows a Tee rosette (gage elements at 0-90° orientation, aligned with principle axes [p, q]).

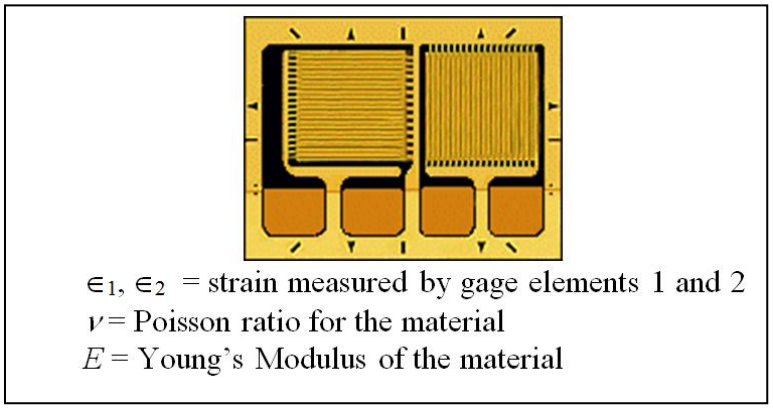

Figure 3-8. Tee Rosette

Note that in Figure 3-8 above, the following relationships exist:

$$\in_p = \in_1 \qquad \text{Eqn. 3-2}$$

$$\in_q = \in_2 \qquad \text{Eqn. 3-3}$$

$$\sigma_p = \left[E/(1-\nu^2)\right](\in_1 + \nu \in_2) \qquad \text{Eqn. 3-4}$$

$$\sigma_q = \left[E/\left(1-\nu^2\right)\right]\left(\in_2 + \nu \in_1\right) \qquad \text{Eqn. 3-5}$$

Figure 3-9 shows a rectangular rosette (gage elements at 0-45-90° orientation) for use when orientation of principle axes is unknown. Typical setup is for each gage element to become an active arm in separate Wheatstone bridge circuits (i.e., a Wheatstone bridge for each gage element of the rosette).

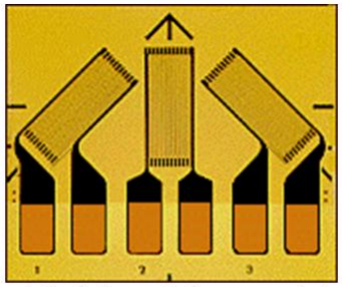

E = Young's Modulus of the material
ν=Poisson ratio for the material
$\in_1, \in_2, \in_3$ = strains measured by gage elements 1,2,3

Figure 3-9. Rectangular Rosette

Note that in the above, the following relationships exist:

Maximum (σ_p) and minimum (σ_q) normal stress are calculated from:

$$\sigma_{PQ} = \frac{E}{2}\left[\frac{\in_1 + \in_3}{1-\nu} \pm \frac{\sqrt{2}}{1+\nu}\sqrt{(\in_1 - \in_2)^2 + (\in_2 - \in_3)^2}\right]$$

Eqn. 3-6

θ = Acute angle from gage 1 axis to maximum normal stress axis.

$$\phi_{PQ} = -\theta = \frac{1}{2}\tan^{-1}\left(\frac{2\in_2 - \in_1 - \in_3}{\in_1 - \in_3}\right)$$

Eqn. 3-7

$$Max\ Shear\ Stress = \tau_{\max} = \frac{E}{2(1+\nu)}\sqrt{(\in_1 - \in_2)^2 + (\in_2 - \in_3)^2}$$

Eqn. 3-8

3.2.2 Bonded resistance strain gage

The term "bonded resistance strain gage" can apply either to the semiconductor gage or to the wire or etched-metallic-foil-type gage. The etched-metallic-foil-type gage will probably be the one the instrumentation engineer will have to be concerned with and will be referred to as "the strain gage" or simply "the gage." Strain gages are made in a printed circuit card process using conductive metallic foils and base carrier materials.

A grid pattern is etched on a patch of foil in a compact fashion to permit higher gage resistance in a smaller area. Figure 3-10 is a photo of a gage magnified approximately 10 times.

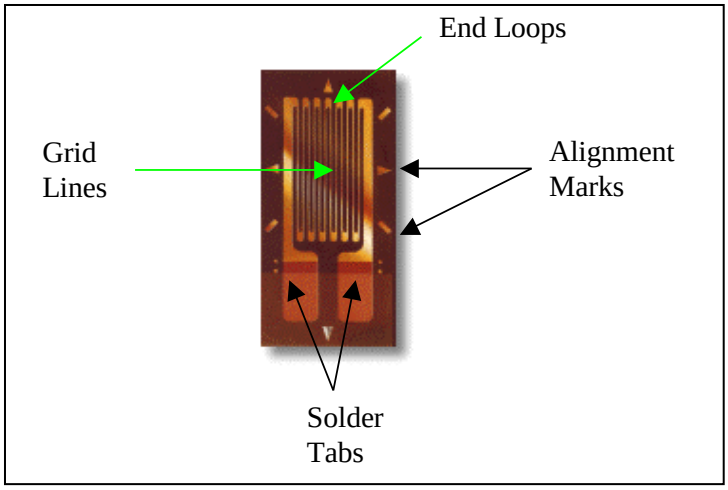

Figure 3-10. Magnified Gage

Gage resistance values range from 30 to 3000 Ω, with 350 Ω being the most commonly used. The carrier material and the adhesive must work together to faithfully transmit the strains from the test material to the grid. The grid can be made of many different alloys. The alloy type of the gage is chosen to match the characteristics of the test material. When the material is stressed, a strain occurs, and the strain is sensed by the strain gage. The grid is also strained and the net effect is a very small resistance change. This change in resistance is due to the cross-sectional area of the grid-line elements changing and hence changing the resistance of the gage from the static, unstrained condition. The amount of resistance change per unit strain is known as the gage factor (GF), and is calculated as:

$$\mathrm{GF} = \left(\frac{\Delta R}{R}\right) / \left(\frac{\Delta L}{L}\right) = \left(\frac{\Delta R}{R}\right) / \in \qquad \text{Eqn. 3-9}$$

The GF for most foil gages is around GF=2. The exact value of the GF should be supplied with the gage in its package from the manufacturer. Ideally, the strain gage would only respond to strain parallel to the grid lines, along the longitudinal axis of the gage; however, since the grid is composed of many loops, the ends of the loops respond to strain as well, although transverse to that of the grid lines. For this reason, the end loops are made thicker to desensitize them as much as possible. This end loop material, however, still gives the gage some amount of transverse sensitivity. This amount of transverse sensitivity is specified by the transverse sensitivity factor (K_t) and is usually expressed as a percentage in the range of 0 to 10%:

$$K_t = \frac{\mathrm{GF(transverse)}}{\mathrm{GF(longitudinal)}} \qquad \text{Eqn. 3-10}$$

The value of K_t is usually small enough to ignore in most applications. It may be necessary to consider the value of K_t for short-length, wide-grid gages or in the use of rosette gages where high-transverse strain fields may exist.

Temperature also adversely affects the strain gage, acting as another source for error. Fortunately, temperature compensation is available by a number of techniques. First, gages can be manufactured for most common materials so that differences in thermal expansion coefficients between the test material and the gage itself are nullified; however, the compensation is only effective over a limited temperature range. The gage manufacturer should supply a data sheet with a plot of the apparent strain versus temperature with the type of material it was tested on and the lot number in which the gage was produced. Other techniques for temperature compensation will be covered shortly.

3.2.3 Electrical measurement considerations

Since the change in resistance of the gage being strained is on the order of a few Ω at most, a sensitive device capable of detecting this small percentage of resistance change is required. Such a technique exists by using the Wheatstone bridge circuit (Figure 3-11).

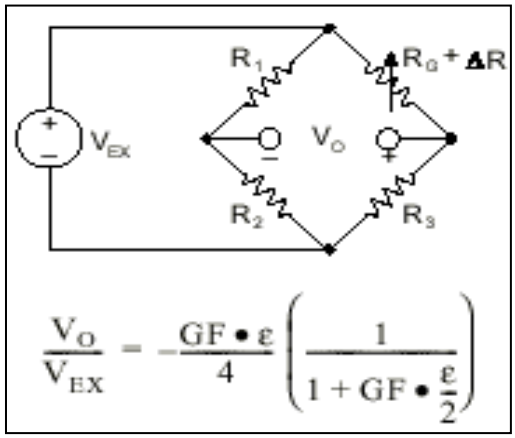

Figure 3-11. Wheatstone Bridge

The basic setup is to have the strain gage occupy one arm of the bridge while precision fixed resistors complete the rest of the bridge. This is known as a quarter bridge arrangement.

The bridge is said to be balanced when all arms have equivalent resistance that results in $V_o = 0$ V. When a strain causes the gage resistance to change, the bridge will become unbalanced and V_o will now be non-zero. The relationship is:

$$V_o = V_{EX} * \left\{ \left[\frac{R_3}{(R_3 + R_g)} \right] - \left[\frac{R_2}{(R_1 + R_2)} \right] \right\} \qquad \text{Eqn. 3-11}$$

Slight variations in the values of the fixed resistors (also known as bridge completion resistors) as well as the gage resistance can cause the bridge to become unbalanced and therefore $V_o \neq 0$. To adjust and balance the bridge to return V_o to zero, a relatively-high-resistance-variable resistor (or trim pot as it is commonly known) is typically placed in parallel (shunted) with R_2. This balance pot will generally reside in the signal conditioning equipment. The constant voltage V_{EX} is usually supplied by a precision voltage source from within the signal conditioning hardware. The value of V_{EX} is typically 3, 5, or 10 VDC. Higher excitation voltage will result in a proportionately higher bridge output per unit strain; however, adverse self-heating effects can occur if either the gage or the base material has relatively poor heat transfer

characteristics. Power supply current capacity must also be considered if the same source is used to excite many bridges, as is often the case. Typically, a three-wire setup is employed to connect the strain gage to the signal conditioning equipment (Figure 3-12). This configuration has the benefit of lead wire temperature compensation.

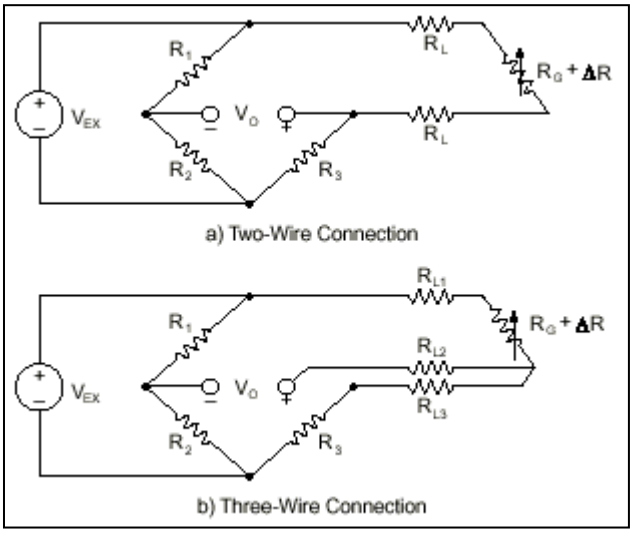

Figure 3-12. Bridge Connections

The strain gage may not be located close to the signal conditioning equipment. The location may dictate the use of relatively long lead wires to make the necessary electrical connections between the gage, the bridge completion resistors, and the signal conditioning equipment. Unfortunately, the lead wires can adversely affect the strain measurement due to their own resistance, R_l. The lead wires are in series with the gage so that the total resistance of the gage bridge arm ends up being $R_g + R_l$. The overall effect is to desensitize the bridge. For example, if 100 feet of 24 gauge copper wire is used to connect a 350 Ω gage to the signal conditioning equipment, and if the lead wire resistance is ignored, there will be a 0.75% lower output than expected. This output may be acceptable depending on the desired overall accuracy of the measurement, but there are some solutions to the problem. First, the resistance of the lead wires can be measured and their values can be used in the strain equations. Second, the resistance of the lead wires can be reduced by using larger-diameter wire, such as American Wire Gage (AWG) #22 wire instead of AWG #30. Third, the signal conditioning and/or bridge completion resistors can be moved closer to the strain gage. The test item and the location provided for instrumentation may dictate which of these options, if any, is chosen. The instrumentation engineer must consider the above items when deciding upon a course of action. Careful attention to proper grounding and shielding techniques is also critical to maintaining measurement accuracy. Remember, the signal levels are generally in the range of mV. Shielded twisted pair cable is often used for the lead wires. The shielding is beneficial in keeping out unwanted noise, but can also be a source for ground loops if not properly terminated.

3.2.4 Calibration

Calibration is required to convert the mV output from the strain gage to microstrain, and there are direct and indirect methods for accomplishing this. The direct method is the most desirable; however, in the case where the strain gage is part of a transducer such as a load cell, the direct method is usually impractical if not impossible. Therefore, the indirect method, often

called shunt calibration, is sometimes the only choice. For shunt calibration, a known resistance is placed in parallel (shunted) with the active gage thereby simulating a compressive strain by slightly reducing the resistance in that arm of the bridge. Simulated strain values up to about 2000 $\mu\in$ with shunt resistance values in the range of 50k to 500k are typical. Larger strains can of course be simulated with lower shunt resistor values, but then non-linearity inherent to the Wheatstone bridge becomes an issue. If larger strains must be simulated, the non-linearity can be accommodated by using equations in the references in Appendix A.

For strains up to about 2000 $\mu\in$:

$$R_c = \left[\frac{(R_g \times 10^6)}{(GF \times N \times \in sim)}\right] - R_g \qquad \text{Eqn. 3-12}$$

where R_c = value of shunt calibration resistor in Ω;
R_g = nominal strain gage resistance in Ω;
GF = gage factor of the strain gage;
N = number of active gages;
$\in$sim = simulated strain in units of microstrain, $\mu\in$.

Tensile (positive) strain can also be simulated in similar fashion by shunting the adjacent arm of the bridge (R_3 as shown in Figure 3-13), as long as the simulated strain is, once again, fairly small. In this case, the sensitivity to the non-linear effects of the Wheatstone bridge is essentially doubled. There are generalized equations for these non-linear effects in the references in Appendix A.

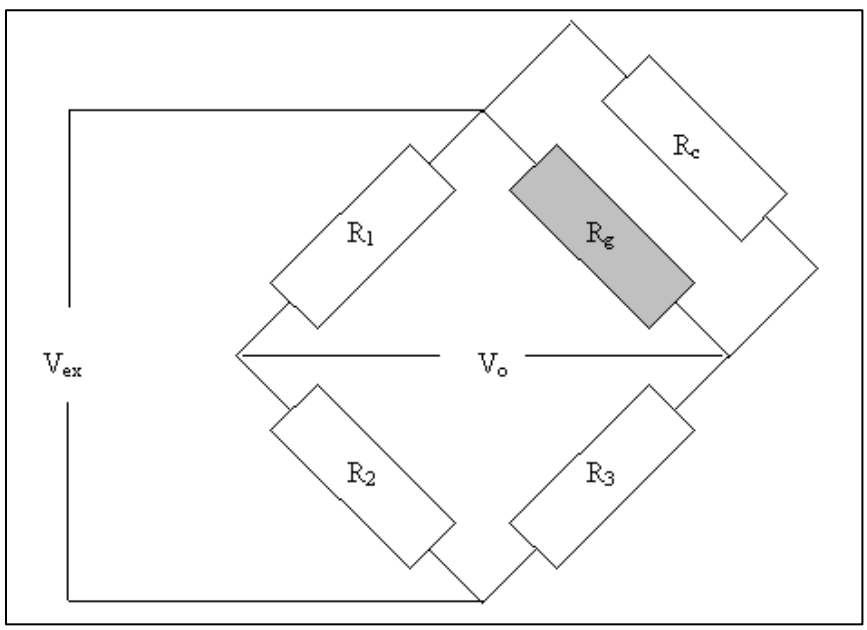

Figure 3-13. Bridge Calibrations

3.2.5 Strain gage installation

Proper strain gage installation is necessary to obtain accurate experimental stress results. Skilled technicians usually install strain gages after attending a strain gage school or training

course. The decision on locations of the desired stress measurements is usually made by the test sponsor or mechanical design team of the test item. The instrumentation engineer must then ensure the following items are addressed. Failure to proceed in this fashion will result in poor gage adhesion, faulty data, and engineer frustration.

a. The supplies should be on hand for the technicians to apply the gages when the time comes.
b. The type of gage, the material to which the gage is to be mounted, and the environment in which the gage will be exposed.
c. Are the principle axes known (many times they are not)?
d. How long do these gages need to be used?
e. Will the gages be submersed in a liquid?
f. Will the gages be exposed to temperature extremes?
g. How long will the lead wires need to be?
h. Can the bridge completion resistors at the site of the strain gage be co-located?

Once all of the supplies are on hand and the desired locations of the gages known, the installation process can begin. The following steps should be followed.

a. Surface preparation. The surfaces to which the gages are to be applied must be free of paint, oil, grease, etc. The surface preparation usually involves paint stripping, sanding, and degreasing.
b. Install gage or rosette. The gage (or rosette) is applied to the surface with an adhesive. Adhesives exist for a variety of environments and desired lifespan. Cure times vary from a few hours to several days. Cure temperatures can vary from room temperature to several hundred °F. During the curing process, evenly distributed pressure is usually required on the applied gage(s). This is accomplished by using clamps, weights, fixtures, etc.
c. Install bridge. The bridge completion resistor assemblies and small wire terminals or solder tabs may be bonded near the gage. Small-gauge wire is typically used to connect the gage to the bridge completion packs and to the wire solder tabs. The larger-gauge lead wires are then soldered to these tabs and completion networks (not directly to the gage itself).
d. Epoxies and sealants. Finally, depending on the test environment, several additional coatings of specialized epoxies and sealants may be needed to protect the gage(s), bridge completion packs, and/or wire tabs.
e. Patience and skill. Skipping steps or trying to shorten the cure times is a formula for disaster.

3.2.6 Common strain gage configurations as transducers

Strain gages can be used for many purposes as was stated in the introduction. To this point, the focus has primarily been finding the stresses at a point on a material; however, there may be a need to know the bending or axial load on a column or tension member or to measure

the torque on a propeller shaft or torsion bar. To obtain these quantities, there are several ways that strain gages can be used and electrically configured in Wheatstone bridges. Often it is also possible to obtain temperature compensation concurrent with increased signal output. A single strain gage or quarter-bridge arrangement is rarely used to measure loads, torques, pressures, etc. Half- and full-bridge arrangements offer temperature compensation and increased signal output. If both sides of a beam or column are accessible, full-bridge arrangements should be used. Half-bridge arrangements are used primarily when only one surface is readily accessible for gage installation. The diagrams and circuit drawings of the most common configurations are illustrated on the following pages.

Note: Values of N for shunt calibration resistor calculations and the net output from the bridge circuits are included with each application.

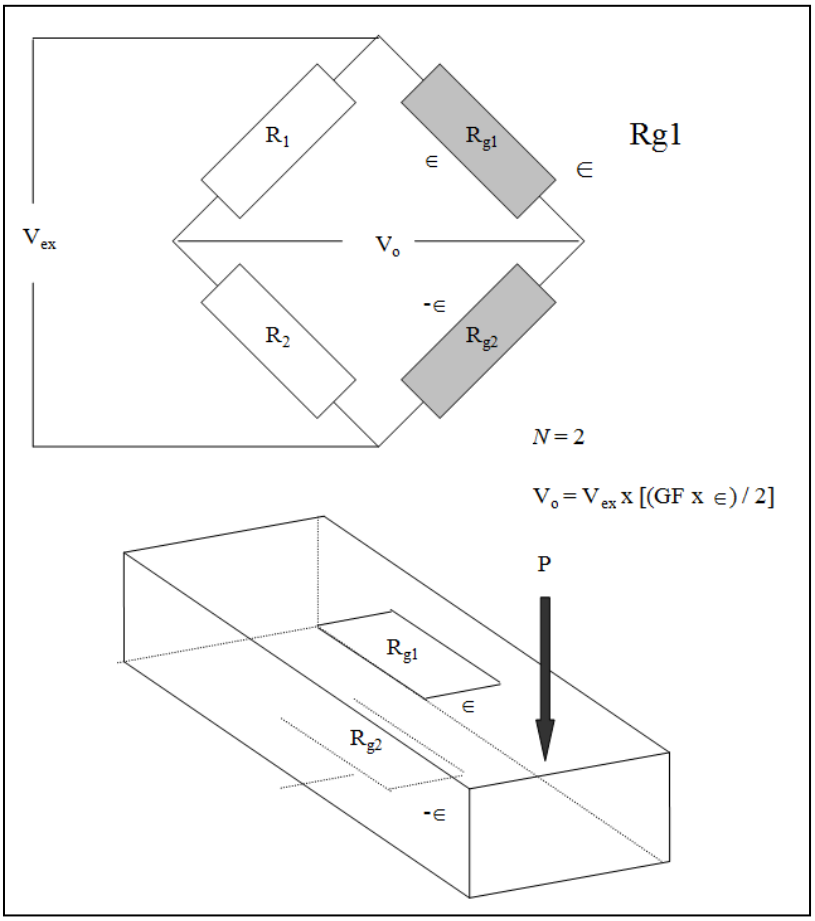

Figure 3-14. Bridge Connections, N=2

Note: This half-bridge configuration measures pure bending loads, has temperature compensation, and has twice the output of a single gage arrangement. In addition, all axial loads are cancelled.

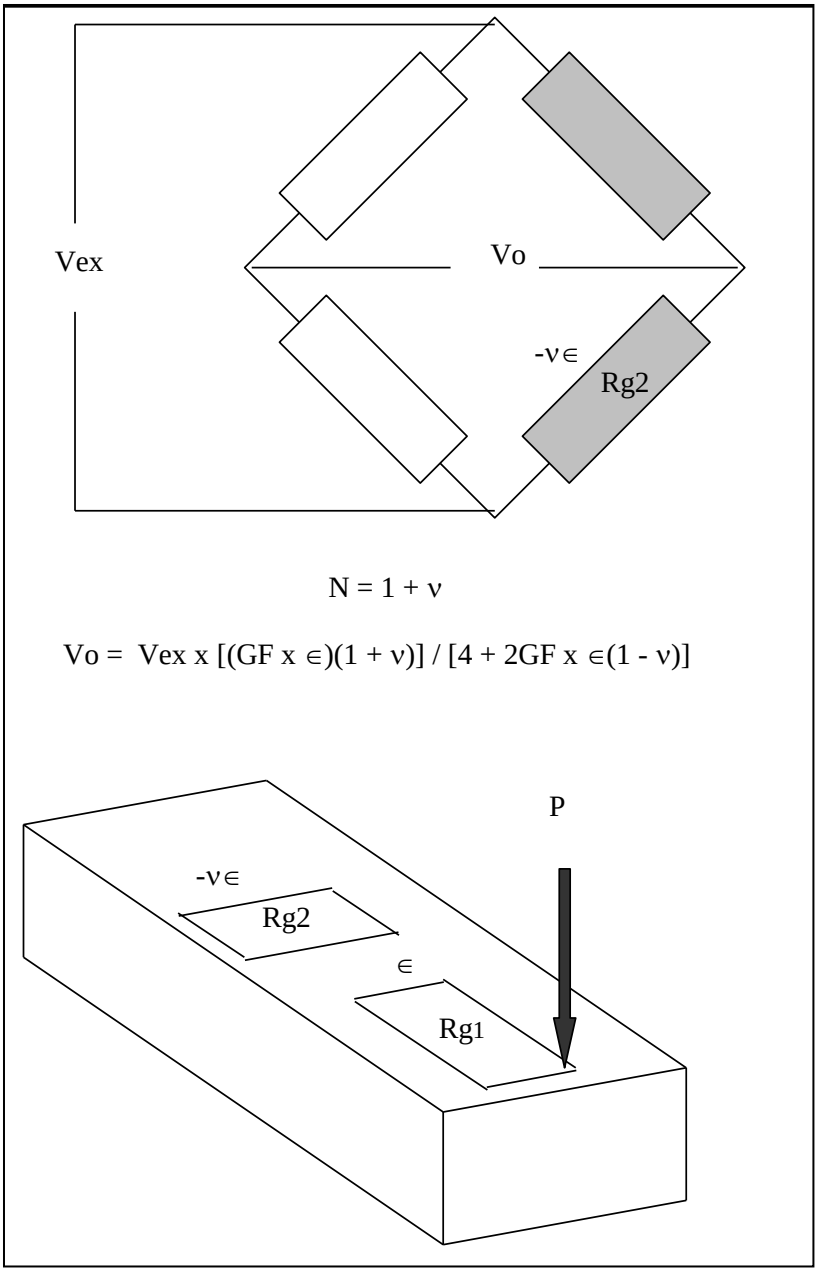

Figure 3-15. Bridge Connections, 21=1+*v*

Note: This half-bridge bending beam configuration (one gage aligned with applied strain; the other with Poisson strain) provides about 25% greater output than the single-gage configuration and has temperature compensation.

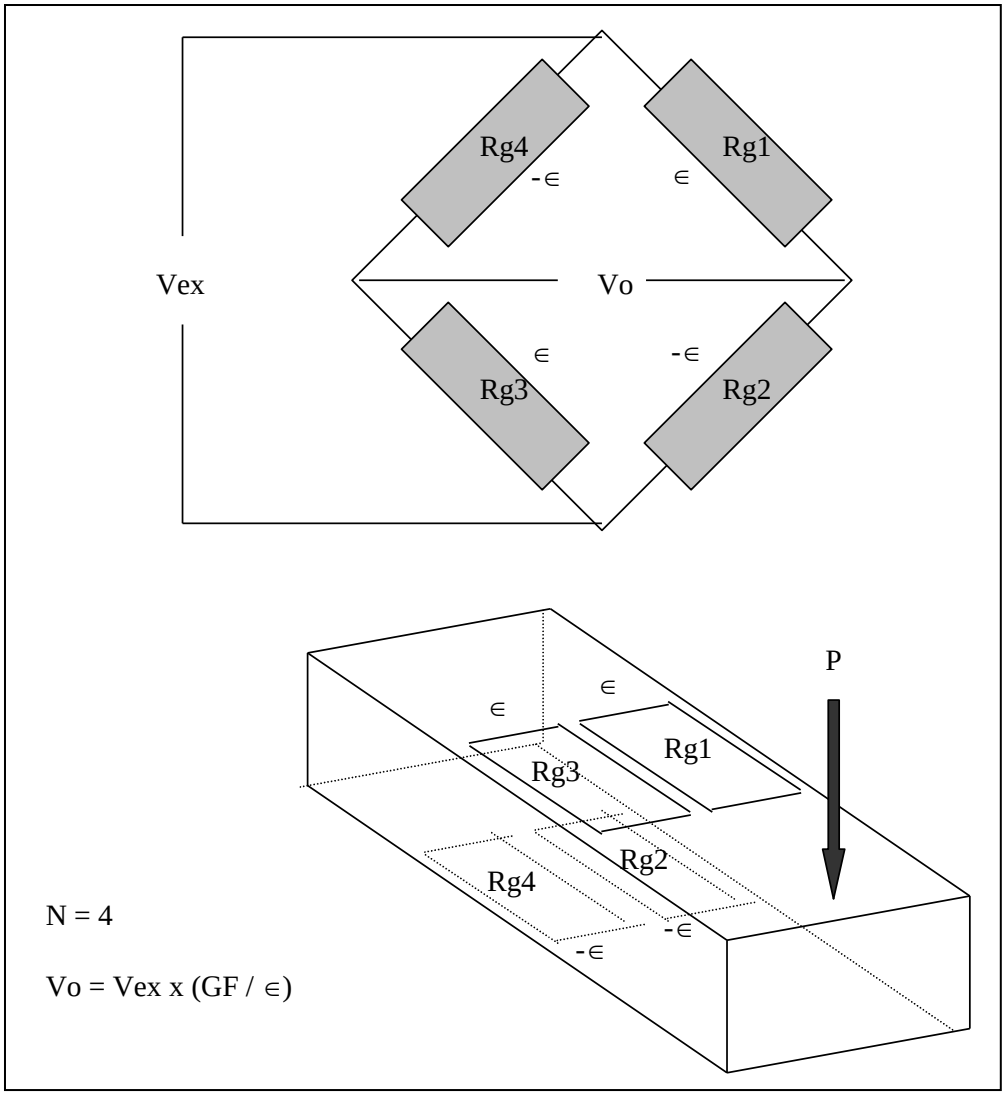

Figure 3-16. Bridge Configuration, N=4

Note: The full-bridge bending beam configuration has four times the output of a single gage and has temperature compensation. Axial loads are cancelled.

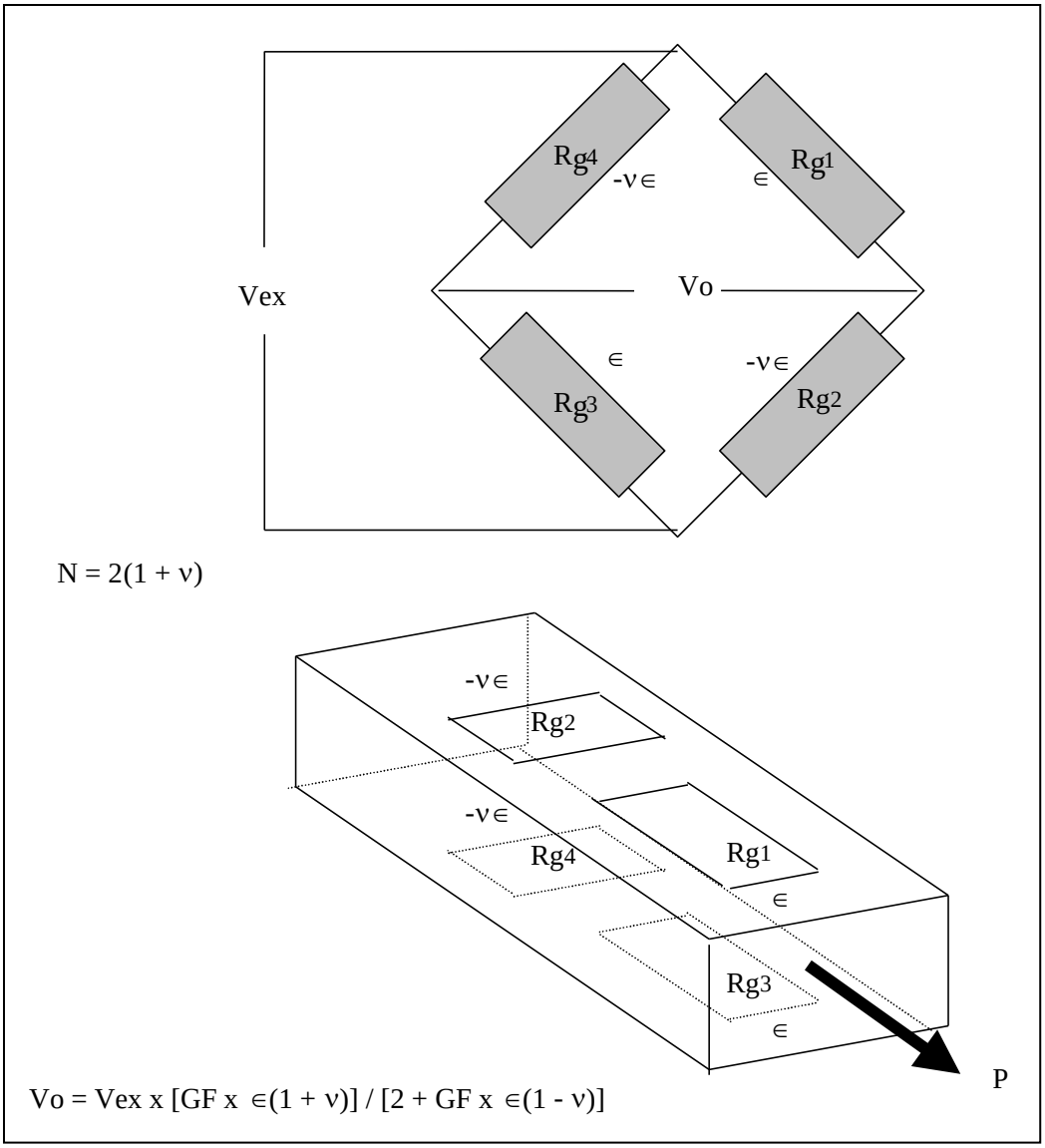

Figure 3-17. Load Cell, N=2 (1+*v*)

Note: This full-bridge, axially loaded column has augmented output level with temperature compensation. Bending loads are cancelled.

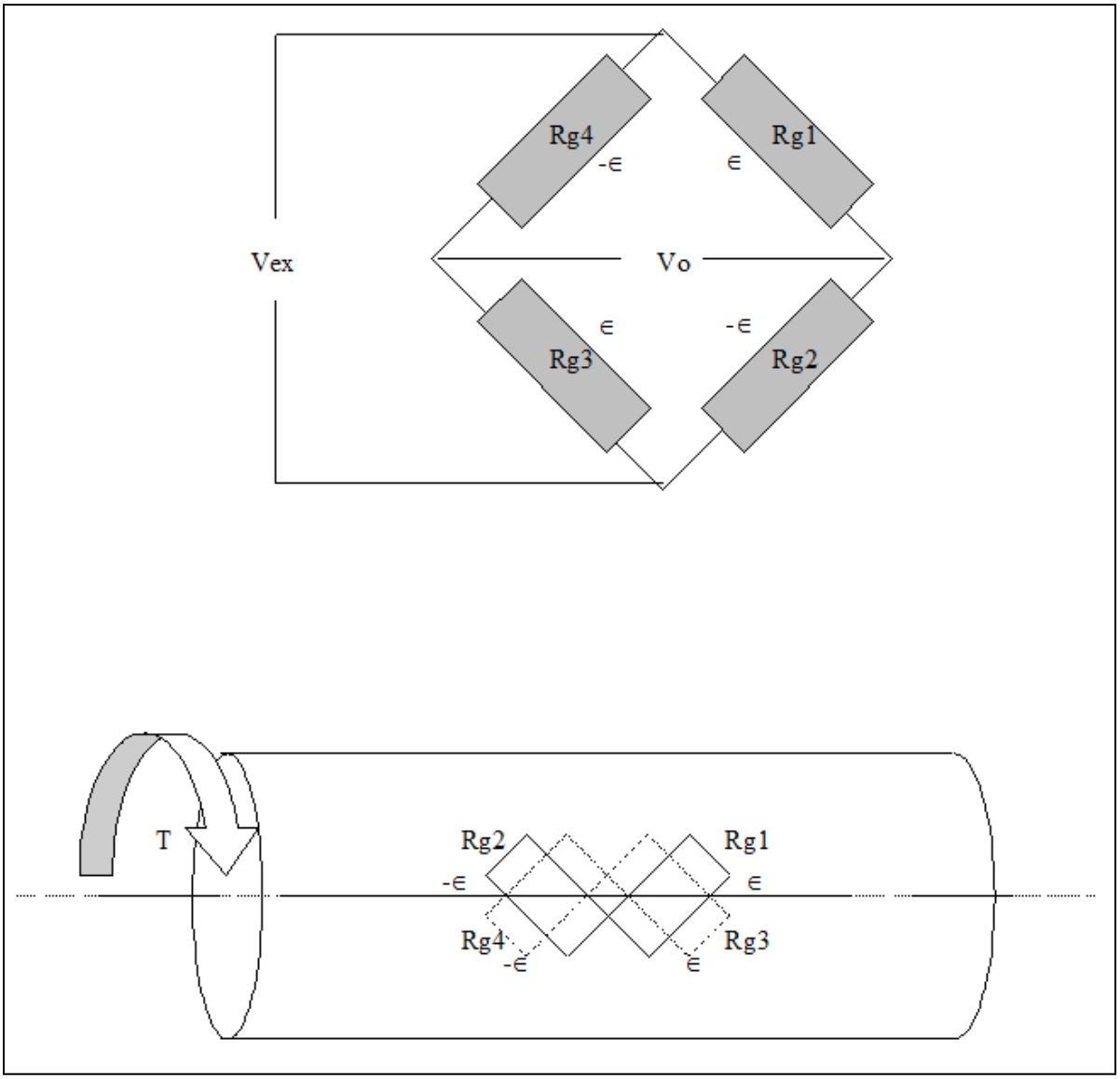

Figure 3-18. Torsion Load Configuration

3.3 Thermocouples

Thermocouples incorporate two electrical conductors of different materials that are connected at one end. This end is exposed to the environment to be measured and is called the measurement junction. The other end (usually connected to a measurement device) is called the reference junction.

When the two junctions are at different temperatures, an mV potential is formed. Knowing the thermocouple type, the mV level, and the temperature of the reference junction allows the user to determine the temperature at the measurement junction. The mV potential created is a function of the materials in the conductors. Some materials create stable, repeatable potentials and have been given type names such as Type E, J, K, N, T, B, R, and S thermocouples.

Thermocouples can be broken down into the two categories of base metal and noble metal. Base metal thermocouples are made from copper, nickel, aluminum, iron, chromium, and silicon (Si) and are known as Types E, J, K, N, and T. Noble metal thermocouples are Types R, S, and B and are made from platinum and rhodium. Noble metal thermocouples are used when the environment dictates that base metal thermocouples cannot be used (temperature, corrosion, etc.).

Thermocouples can be used to measure a very wide range of temperatures (up to 3100°F) in very demanding environmental conditions. Because the junction consists of two wires, case material is not a limiting factor when determining the application. In addition, the thermocouple can be tailored to provide a very fast response time; however, care must be taken when routing thermocouple wire from the measurement junction to the reference junction and measurement device.

3.3.1 Thermocouple Theory

When two wires composed of dissimilar metals or alloys are connected together and the two junctions are exposed to different temperatures, a current will flow due to a thermoelectric electromotive force (EMF). This effect is known as the Seebeck effect, named after the German physicist who discovered it.

The Seebeck effect has been exploited for temperature measurement for years. Cable assemblies comprised of two dissimilar conducting metals are produced and available for a wide range of temperatures and purposes. When this cable is stripped of its insulation at one end and the two conductors are bonded together, we have what is known as a thermocouple (see Figure 3-19 and Figure 3-20).

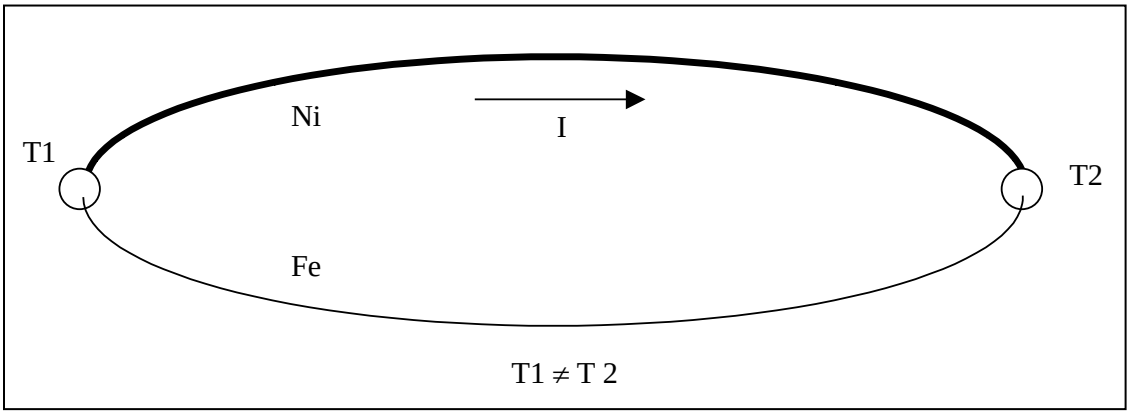

Figure 3-19. Thermocouple Cable Assembly

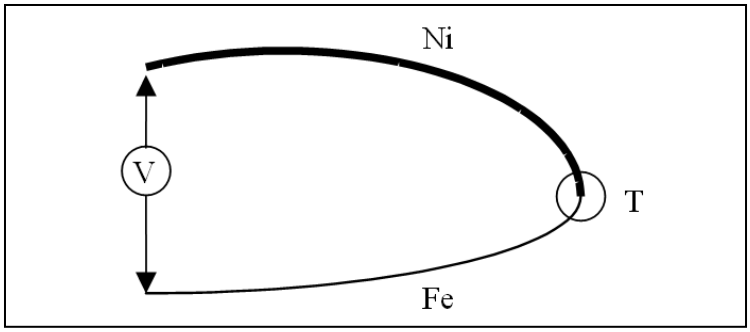

Figure 3-20. Thermocouple Junction

To measure the EMF or Seebeck voltage produced by the junction of the dissimilar metals, we must break the loop and measure the potential of the open ends without affecting the quantity of interest (Figure 3-20 above). Taking this measurement turns out to be a non-trivial task since the EMF generated is typically on the order of microvolts, and any dissimilar metal junctions, not just the one we intend to measure, will generate Seebeck voltages. Therefore, we cannot simply use our voltmeter with a length of thermocouple wire; however, if we provide an intermediate reference junction of known temperature, we can accomplish the task. Originally, this was done with an ice bath at 0°C. Today, it is usually accomplished with a semiconductor-integrated circuit block with terminals provided for the thermocouple wire and the measurement system leads (Figure 3-21). The device will usually be part of the instrumentation system signal conditioning and will act as an electronic ice point reference.

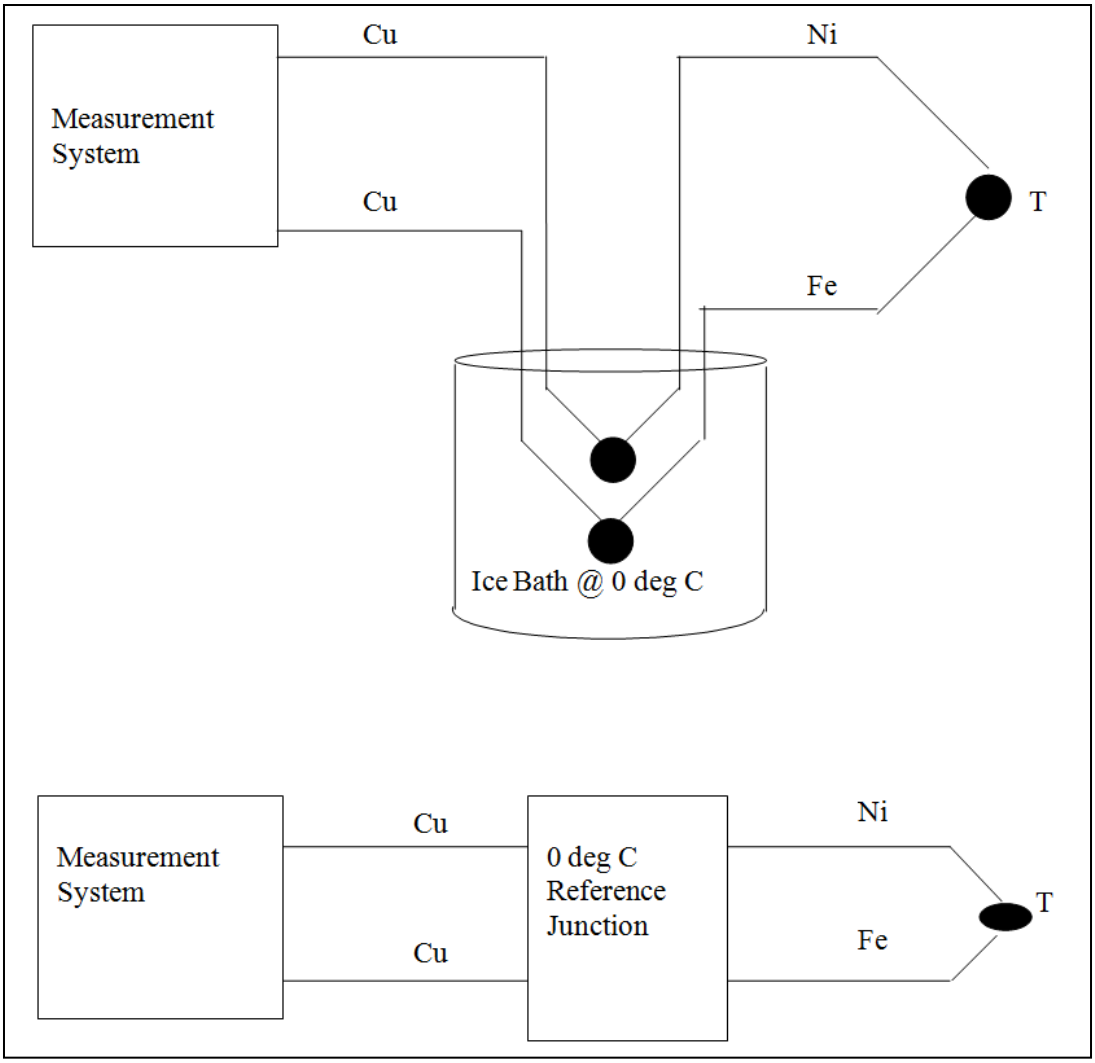

Figure 3-21. Thermocouple Reference Function

The most common thermocouples have been standardized for metal and alloy content by American National Standards Institute (ANSI) and are known as types E, J, K, and T thermocouples. Each type of thermocouple is composed of different pairs of dissimilar metals and/or alloys and each type has a useful temperature range and environment in which it is best suited. Generally, the thermocouple wire, as it is commonly called, is comprised of the two conductors, generally in the range of AWG #20 to 30, each conductor having its own color coded insulation surrounded by an overall outer jacket of plastic or Teflon. The references in Appendix A contain additional information in detail.

Once the voltages are obtained by the measurement system, they need to be converted from microvolts to units of temperature. Unfortunately, unless the range of temperatures is relatively small, the relationship is not linear; however, for each type of thermocouple, there are lookup tables of measured values recorded by the National Institute of Standards and Technology (NIST). From these tables, coefficients have been determined for up to a ninth order polynomial equation to convert the outputs of the various thermocouple types. The polynomial equation is:

$$\boxed{T = a_0 + a_1 x + a_2 x^2 + \ldots + a_9 x^9} \quad \text{Eqn. 3-13}$$

where x is the measured quantity in V and T is in °C.

Often, the location of the temperature measurement is in a hot or cryogenic caustic fluid or pressurized gas. To prevent any intermediate thermocouple junctions, (i.e., short circuits) sheathing material can be used to protect the thermocouple wire insulation from extreme temperatures. In the case of immersion in a caustic fluid or gas, the thermocouple can be placed inside of a small-diameter tube known as a thermowell. The thermowell transfers the heat from the surrounding fluid while protecting the thermocouple inside. The thermocouple may be bonded directly to the interior of the thermowell or may be suspended within it. The construction technique chosen depends on the intended application.

The method to connect the thermocouple ends is also an issue. The ends may be brazed, welded, or silver soldered. Soldering is fine if the temperature to be measured is known to be below the melting point of the solder and the environment in which the thermocouple will be exposed will not chemically react with the solder. Welding provides the highest heat tolerance but can also cause problems if precautions are not taken to prevent overheating of the thermocouple wire. Overheating and reaction with the welding gas can alter the composition of the thermocouple and change its characteristics. The wire is made to conform to the NIST tables. Loss of calibration can result from annealing of the thermocouple wire or from cold working effects caused by stress. This loss of calibration can be especially insidious since the thermocouple will continue to provide an output, but the output will no longer conform to the NIST tables. Therefore, preparation and installation of the thermocouple should be done with care. The thermocouple junction can be several feet or more from the signal conditioning equipment. The extension wire used to make the connection between the thermocouple junction and the signal conditioner needs to be protected. Cable routing should be made to minimize stress points and exposure to extreme hot or cold temperatures. When such exposure(s) are unavoidable, protective sheathing composed of metal braiding or ceramic fiber should be used.

Thermocouple wire is manufactured and color-coded per the ANSI types aforementioned, which always use red-colored insulation for the "-" conductor. The "+" conductor color is type-specific; however, it is important to note that other countries have established other color codes. For example, United Kingdom, Brown & Sharp thermocouples use blue for negative while German (Deutsches Institut für Normung) thermocouples use red for positive. These differences must be taken into account on test items that may have instrumented components from other countries.

Pre-fabricated thermocouple assemblies are commercially available for specific tasks. General-purpose thermocouples with welded ends are available in all standard ANSI types. Thin foil styles are well suited for surface or skin temperatures. Bonding cements are available for different temperature ranges and fluid exposures. Washer types can be used to get a quick idea of the temperature of any item with fasteners (screws, nuts, bolts).

Connectors, contacts, and terminal strips consistent with the ANSI-type metals and alloys are all commercially available to aid in the layout and installation of thermocouples on a test vehicle. Thermocouples can be connected in parallel to acquire the average temperature over an

area, or connected in series (known as a thermopile) to provide for increased temperature measurement sensitivity at a location.

As with other low-level signals, good signal conditioning prior to sampling is key to obtaining reliable data. High-quality instrumentation amplifiers with high common mode rejection ratios (CMRRs) are especially desirable since the thermocouple junction itself may be grounded. Such is the case with surface temperature thermocouples.

Having advanced knowledge of the expected range of temperatures and the environment in which the measurement is to be made will also help the instrumentation engineer choose the best thermocouple type. Several different types and styles of thermocouples may reside on the same test vehicle. Thermocouples can provide a simple, inexpensive method of temperature measurement when planned for and utilized properly.

3.4 Resistive Temperature Devices

The RTDs are used as another means of measuring temperature. Where thermocouples are very good at higher temperatures, RTDs are a good choice for lower temperature measurement.

3.4.1 Resistive temperature device theory

The RTDs operate on the inherent fact that when metallic materials are heated and cooled, their electrical resistances change. The resistance, *R*, is directly proportional to the length of the metal wire, *L*, and inversely proportional to its area, *A*, as in the following:

$$\boxed{R = \rho L / A} \quad \text{Eqn. 3-14}$$

where ρ is the constant of proportionality (or resistivity of the material).

The RTDs are manufactured from materials whose resistances increase with temperature. Within a certain temperature range, this relationship is linear:

$$\boxed{\rho_t = \rho_o\left[1 + \alpha\left(t - t_o\right)\right]} \quad \text{Eqn. 3-15}$$

where ρ_t = resistivity at temperature t;
ρ_o = resistivity at temperature t_o;
α = temperature coefficient;
t_o = temperature at time zero;
t = temperature at time t.

If the two preceding equations are combined and rearranged, the result is:

$$\boxed{R / R_o = \alpha t + 1} \quad \text{Eqn. 3-16}$$

From the above equation, it is easy to see that resistance versus temperature is linear with a slope equal to α.

An RTD usually contains a coil of wire (wire-wound element) or a grid of conductive film (thin-film element) with a conductor pattern cut into it. Extension wires are attached to the sensing element in order to sense the electrical resistance from some external measurement device. The RTDs can be made of any material but the one most widely accepted is platinum. Platinum is highly corrosive-resistant and very stable over a wide temperature range and can be made very pure for consistent sensors.

Care must be taken when mounting RTDs. Some things to keep in mind are:

a. Wiring configuration. Lead wire resistance errors can be induced if the proper wiring configuration is not selected. As long as the wire resistance stays constant, there are no measurement errors; however, when the lead wire experiences temperature gradients, the resistance will change and affect the temperature measurement. Therefore, three- and four-wire RTDs are available. Refer to paragraph 4.5 for a discussion of Wheatstone bridges.

b. Self-heating effects. To measure the resistance of the RTD, a current must be passed through it. When this is done, the RTD heats up and the reading is slightly higher than the actual temperature. Self-heating is affected by the amount of current passed through the RTD and the environmental conditions in which the RTD is placed.

c. Strain considerations for thin-film RTDs. Thin-film RTDs act much like strain gages; the resistance of the RTD changes as strain is applied. If this occurs, a measurement error will result. Care should be taken when choosing a mounting location that is free from large amounts of strain for a thin-film RTD.

d. Accuracy, Stability, Repeatability.

   (1) Accuracy. Accuracy describes the amount of uncertainty in the measurement. There are normally two classes of RTDs: Class A and Class B. Class A applies to three- and four-wire RTDs with temperature ranges from –200°C to 650°C. Class B is for all RTDs in the entire temperature range from –200°C to 650°C.

   (2) Stability. Stability is the RTDs ability to maintain a consistent resistance when a constant temperature is applied. The RTDs are normally very stable where drift rates on the order of 0.05°C/year common.

   (3) Repeatability. Repeatability is the ability of the RTD to give same resistance value under repeated identical conditions.

e. Response Time. Manufactures normally give a response time specification, usually the time constant of the RTD. This specification is the time it takes the RTD to reach 63% of its final value when reacting to a step change in temperature.

3.5 Hall Effect Devices

Hall-effect devices measure magnetic field strength. Magnetic flux lines are generally viewed as flowing from the north pole of a magnet to the South Pole. The total number of flux lines flowing through a given area is known as flux density, or *B*. A gauss (G) is one flux line passing through one square centimeter (cm). A tesla (*T*) is 10,000 lines per square cm and, therefore, $T = 10{,}000\ G$. The force that produces the flux lines is the magnetic field strength, *H*. It is then obvious that flux density and magnetic field strength are not equal but related. The

characteristics of the magnetic material must be considered. Only in free space are flux density and field strength considered equal.

The Hall-effect device senses the magnetic field flowing through its sensing material (usually a thin film of gallium arsenide [GaAs], or indium arsenide [InAs]) and outputs a voltage proportional to that magnetic field. The output of the Hall device is greatest when the magnetic flux lines are perpendicular to the sensor. Conversely, if the magnetic flux lines are parallel to the device, little or no output is observed. This device can also be used to measure the direction of flux travel.

Ideally, the device would output zero V in the absence of a magnetic field, but in practice, this is not the case. In practical devices (real-world devices), there is a positive or negative offset voltage, referred to as the Hall offset voltage, that must be taken into account. There is a temperature dependency associated with this offset usually specified in +μV/°C. In addition, the device would ideally have a constant sensitivity over a range of flux density, but in practical devices, this is not true. Specifications in the range of +0.1% to +2.0% are the normally expected range of values. The sensitivity is also temperature dependant. As the temperature goes up, sensitivity decreases, and vice versa for both materials (i.e., GaAs or InAs). Typical values range from 0.04% per degree Celsius to 0.2% per degree Celsius.

A Hall-effect sensor produces a positive voltage for flux line traveling in one direction and a negative voltage for flux line traveling in the opposite direction. Ideally, these voltages would be equal for fields of equal strength traveling in opposite directions but this is not true for a practical device. This phenomenon is known a reversibility error that causes the voltages to be slightly different. This error, as large as 1%, is caused by material inconsistencies and differing sizes off the electrical connections to the material.

3.6 Angular Position Sensors (Synchros and Resolvers)

Angular position as it pertains to a shaft or appendage can be measured by a number of different techniques. Synchros and resolvers have historically been the most robust and accurate devices, but their requirement for alternating current (AC) power and signal processing can be an issue. Absolute shaft encoders and potentiometers typically use DC power, but these typically do not have the longevity of the AC powered units. As is the case with most measurements, several transducers can serve the purpose. The instrumentation engineer must decide which device type is the best solution for the given situation. A brief discussion for each device type is provided in the following paragraphs.

3.6.1 Synchros

Synchros and resolvers come under the general classification of rotary transformers. In the case of the synchro used for instrumentation purposes, it is usually in the form of a synchro transmitter as illustrated in Figure 3-22.

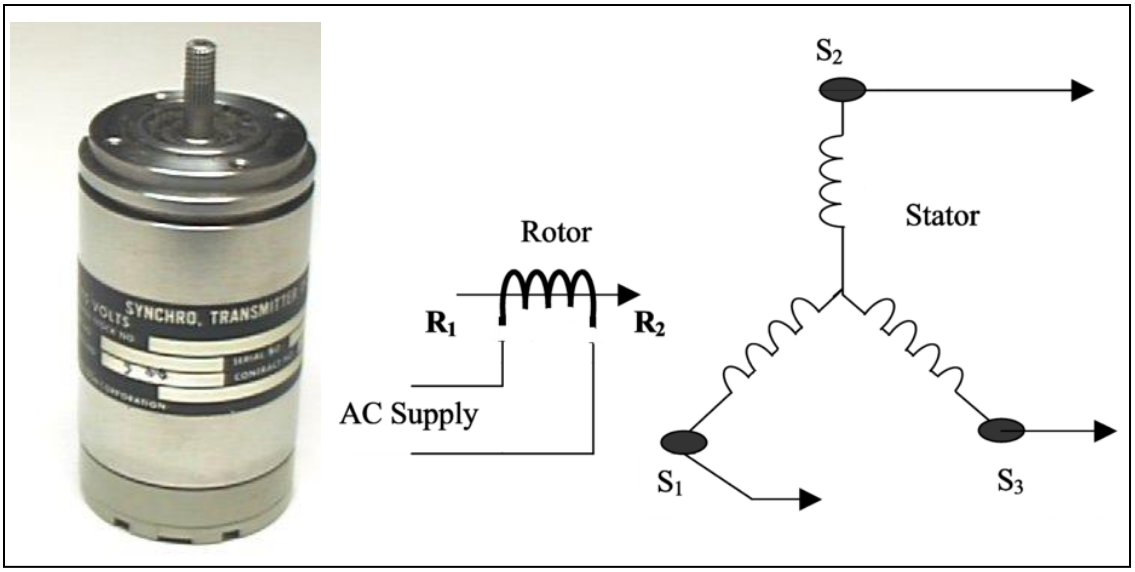

Figure 3-22. Synchro Transmitter

The three stator windings that form the secondary portion of the rotary transformer are mechanically located 120° apart. The stator windings can be connected in a "wye" or "delta" fashion. An AC carrier or reference (typically 115 volts AC [VAC] or 26 VAC, 60 Hz or 400 Hz) is supplied through leads R_1 and R_2 to the rotor coil that forms the primary portion of the rotary transformer. The rotor is mechanically linked by a flexible coupling, belt, chain, or other device to the item for which the angular measurement is to be acquired. The induced AC voltage outputs from the stator windings (S_1, S_2, and S_3) are in time phase with the applied rotor winding input, but will vary in amplitude with respect to rotor position. Therefore, there is only one set of S_1, S_2, S_3 output amplitudes for a given rotor position. These outputs can be connected to another synchro in the form of a synchro receiver for direct display (see Figure 3-23).

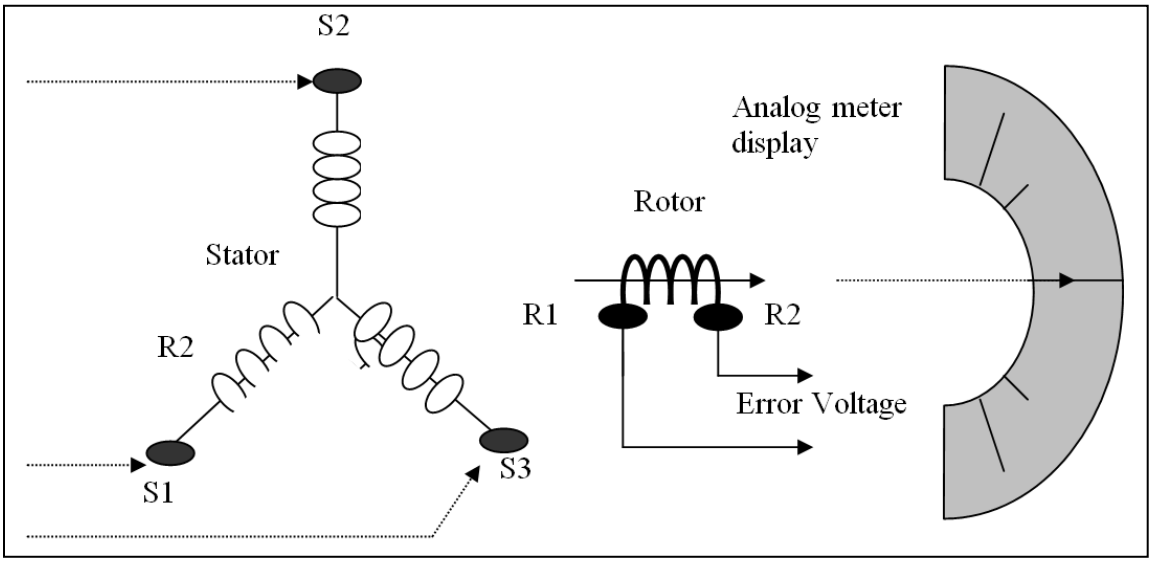

Figure 3-23. Synchro Receiver

The receiver synchro stator windings induce a torque on the receiver rotor until the position matches that of the transmitter rotor. The windings on the receiver rotor will have an induced output "error" voltage that will go to zero as the rotor position matches that of the transmitting synchro. An arm attached to the receiver rotor can then be used as a pointer for a traditional analog meter or as a mechanical link for some other process.

The instrumentation engineer will want to record a time history of the transmitting rotor position rather than providing a remote analog meter display. The S1, S2, S3 synchro transmitter outputs are sent to the synchro to digital (S/D) converter along with the rotor AC supply voltage (see Figure 3-24). The S/D converter knows the unique rotor position for the given set of input amplitudes and outputs the angular value in a parallel digital word format. The output resolution (12-, 14-, 16-bit) in degrees or radians is determined by simply dividing the desired engineering units of measurement for a complete circle (360°, 2π radians, etc.) by the total number of output counts available (2^{12}, 2^{14}, 2^{16}, etc.).

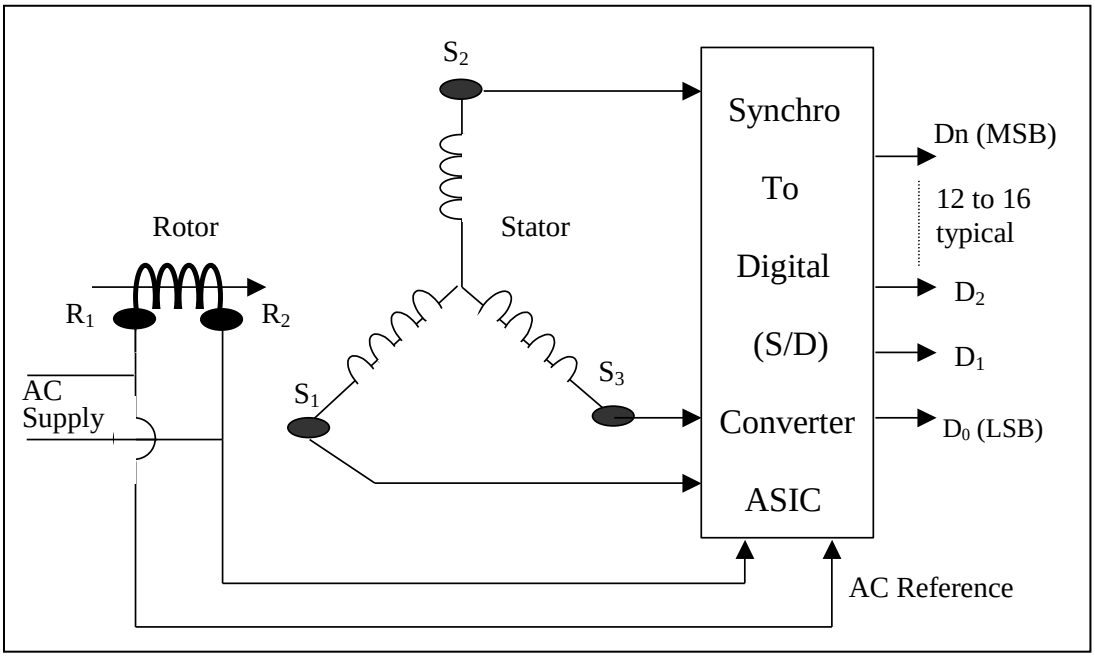

Figure 3-24. Synchro Transmitter

3.6.2 Resolvers

Resolvers differ from synchros in that they have a pair of output wires from two isolated stator windings that are mechanically located 90° apart (Figure 3-25). As with the synchro, the rotor winding is excited with a reference AC supply voltage. Each pair of stator windings has induced voltages in time phase with the input reference. The amplitudes of these induced voltages are proportional to the sine and cosine of the rotor angle with respect to the stator windings. Resolvers have historically been used in systems to perform electrical computations. These computations have historically been used to perform coordinate system transformation between polar and rectangular coordinate systems. Resolver-to-digital application-specific integrated circuits are commercially available to convert the resolver outputs to an absolute angular measurement. Similar to the S/D converter, the output resolution is typically on the order of 12 to 16 bits.

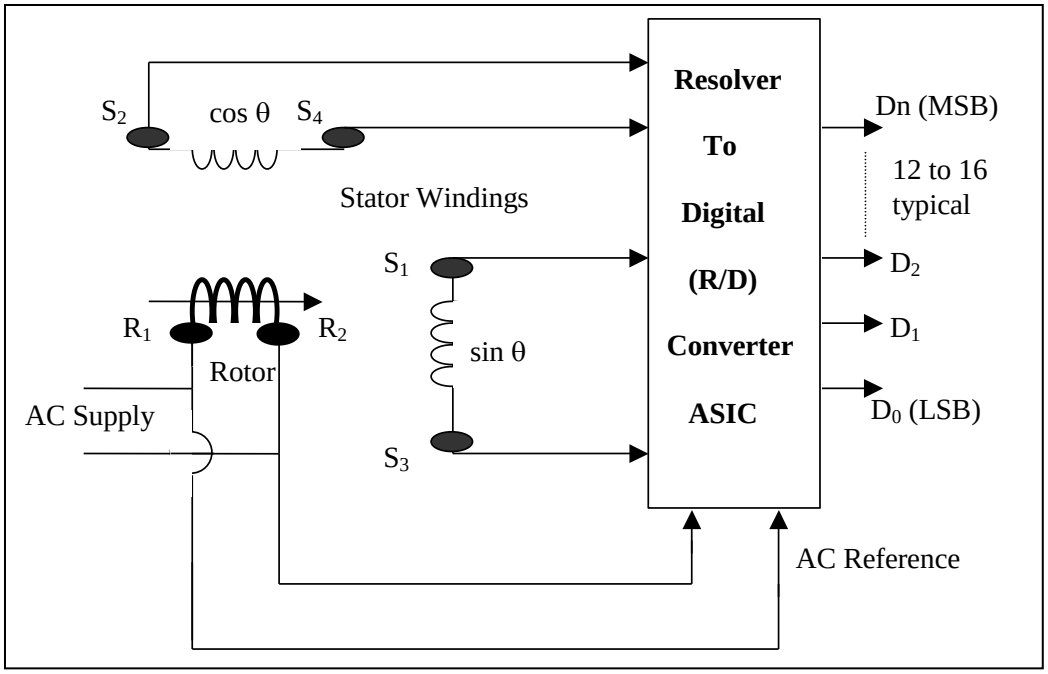

Figure 3-25. Resolver

3.6.3 Absolute shaft encoders

Absolute shaft encoders use an optical-electronic method of measuring angular position (see Figure 3-26). The absolute shaft encoder is constructed with an input shaft to which a disc is attached. The disc is etched with encoded strips of transparent and opaque sectors. The number of concentric strips determines the output resolution of the device (i.e., the number of bits). The encoded strips pass between light sources, such as light-emitting diodes (LEDs) and photodiodes, or phototransistors. The encoded pattern on the disc can be arranged in various schemes. The most basic scheme is binary coded decimal (BCD). Others, such as Gray code, limit the number of bits that can change state simultaneously. In Gray code, only one bit at a time changes state as the input shaft is rotated. The output, then, is a parallel digital word, typically 12 to 16 bits wide, that directly represents the shaft angle. The zero position is set at the factory when the device is constructed. Power supply requirements range from +5 to +28 VDC.

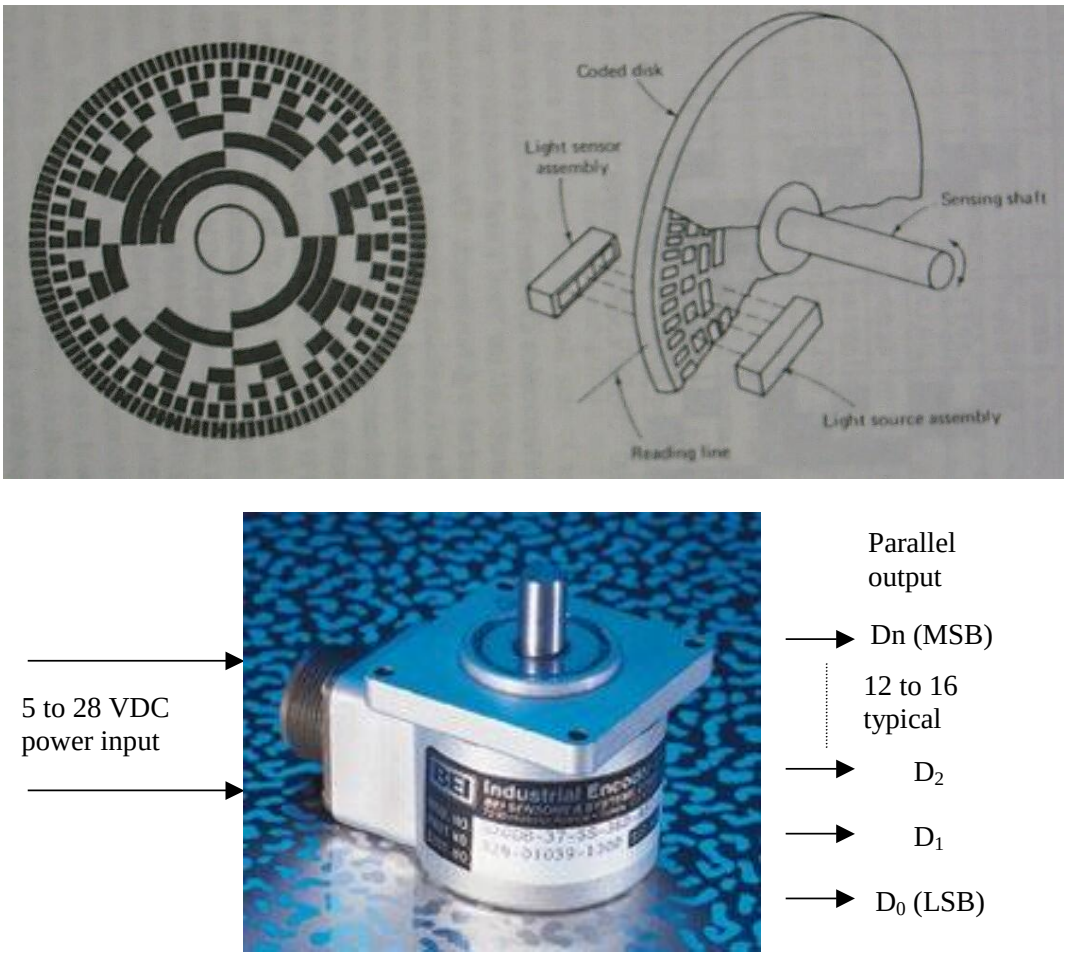

Figure 3-26. Shaft Encoders

3.6.4 Linear variable differential transformer

A linear variable differential transformer (LVDT) is a common type of electromechanical transducer that can convert the linear motion of an object to which it is mechanically coupled into a corresponding electrical signal (Figure 3-27). There are LVDTs readily available that can measure movements as small as a few millionths of an inch up to several inches. There are also LVDTs capable of measuring positions up to ± 20”.

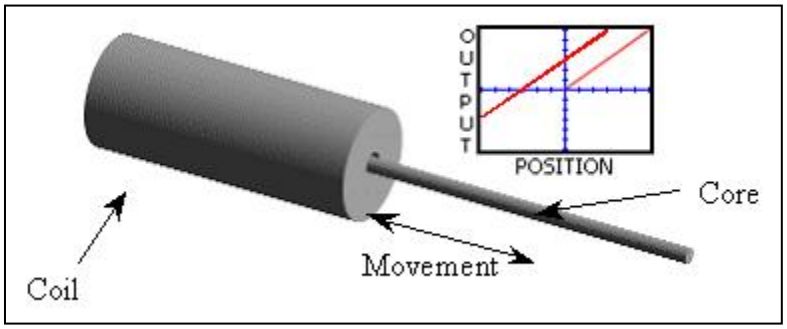

Figure 3-27. Linear Variable Differential Transformer

The physical construction of a typical LVDT consists of a movable core of magnetic material and three coils comprising the static transformer (Figure 3-28). One of the three coils is the primary coil and the other two are secondary coils. The moving element of the LVDT is a separate tubular armature of magnetically permeable material called the core that is free to move axially within the coils' hollow bore and mechanically coupled to the object whose position is being measured. This bore is typically large enough to provide substantial radial clearance between the core and bore, with no physical contact between it and the coil.

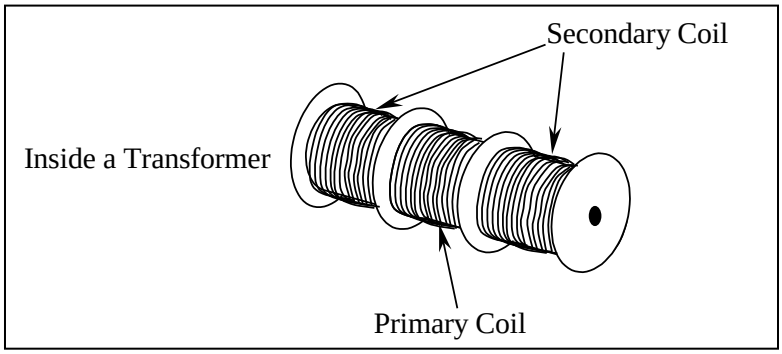

Figure 3-28. Linear Variable Differential Transformer Construction

During operation, the primary winding of the LVDT is energized by AC of appropriate amplitude and frequency, known as the primary excitation. The LVDT's electrical output signal is the differential AC voltage between the two secondary windings, which varies with the axial position of the core within the LVDT coil. Usually, this AC output voltage is converted by suitable integral electronic circuitry to high-level DC voltage or current that is more convenient to use.

Figure 3-29, below, illustrates what happens when the LVDT's core is in different axial positions. The LVDT's primary coil is energized by a constant amplitude AC source, V_{in}. The magnetic flux developed is coupled by the core to the adjacent secondary windings, S1 and S2. If the core is located midway between S1 and S2, equal flux is coupled to each secondary so the voltages, E1 and E2, induced in each winding are equal. At this midway core position, referred to as the null point, the differential voltage output, (E1-E2), is effectively zero. As shown here, if the core is moved closer to S1 than to S2, more flux is coupled to S1 and less to S2, so the induced voltage E1 is increased while E2 is decreased, resulting in the differential voltage (E1-E2). Conversely, if the core is moved closer to S2, more flux is coupled to S2 and less to S1 and E2 is increased as E1 is decreased, resulting in the differential voltage (E2-E1).

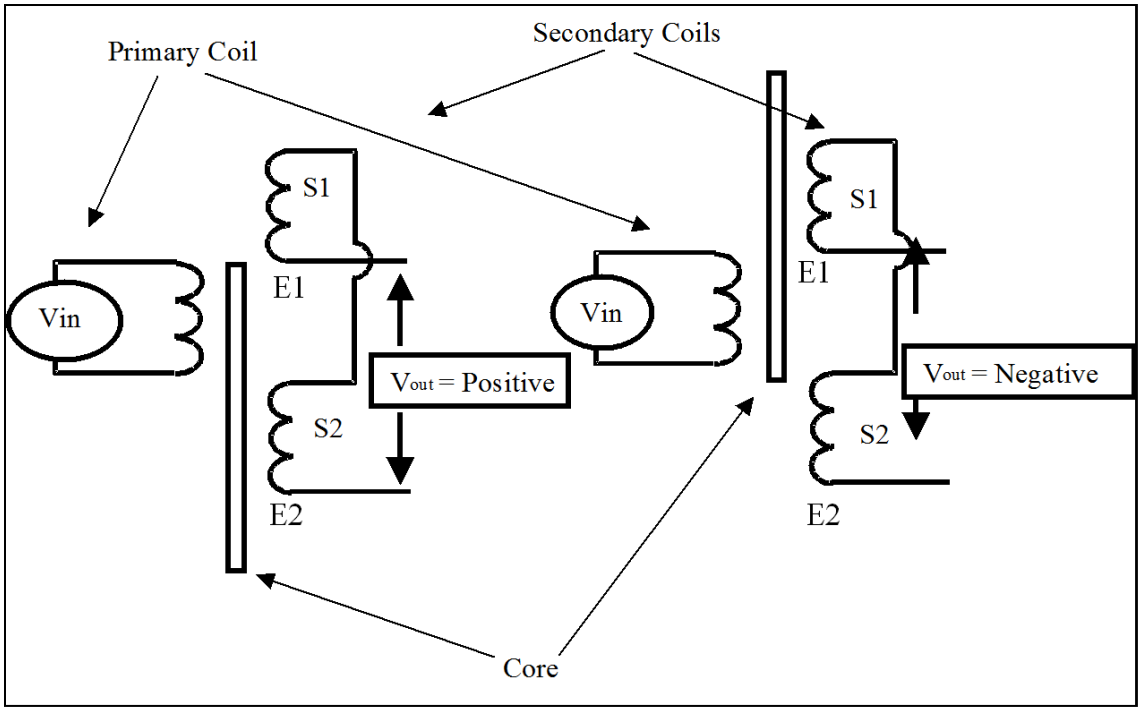

Figure 3-29. Linear Variable Differential Transformer

Supplying this excitation power for an LVDT is one of several functions of the support electronics, which is also sometimes known as LVDT signal conditioning equipment. Because the LVDT is an electrical transformer, it is designed for AC power of specific amplitude and frequency (typically 3 V root mean square [RMS] at 2.5 kHz). The output of an LVDT is an AC waveform. The magnitude of the output of the transducer rises regardless of the direction of movement from the electrical zero position. In order to know in which half of the displacement transducer coil the center of the armature is located, one must consider the phase of the output as well as the magnitude. The output phase of the position sensor is compared with the excitation phase and it can be either in or out of phase with the excitation, depending upon which half of the coil containing the center of the armature.

One of the most important features of an LVDT is its low friction operation. In normal use, there is no mechanical contact between the LVDT's core and coil assembly, and there are minimal sources of friction, such as rubbing, dragging, or binding. This feature is particularly useful in materials testing, vibration displacement measurements, and high-resolution dimensional gauging systems. Because there is normally no contact between the LVDT's core and coil structure, no parts can rub together or wear out. This means that an LVDT features unlimited mechanical life. This factor is especially important in high-reliability applications, such as aircraft, satellites, space vehicles, and nuclear installations. It is also highly desirable in many industrial process control and factory automation systems. Additionally, since an LVDT operates on electromagnetic coupling principles in a friction-free structure, it measures infinitesimally small changes in core position. This "infinite" resolution capability is limited only by an LVDT's signal conditioner. These same factors also give an LVDT its outstanding repeatability.

The LVDT has only one axis of sensitivity. In other words, the LVDT responds to motion of the core along the coil's axis, but is generally insensitive to cross-axis motion of the core or its radial position. Thus, an LVDT can usually function without adverse effect in applications involving misaligned or floating moving members, and in cases where the core doesn't travel in a precisely straight line.

3.6.5 Rotational variable differential transformer

The rotational variable differential transformer (RVDT) is used to measure rotational angles and operates under the same principles as the LVDT sensor. Whereas the LVDT uses a cylindrical linear core, the RVDT uses a rotary core (see Figure 3-30).

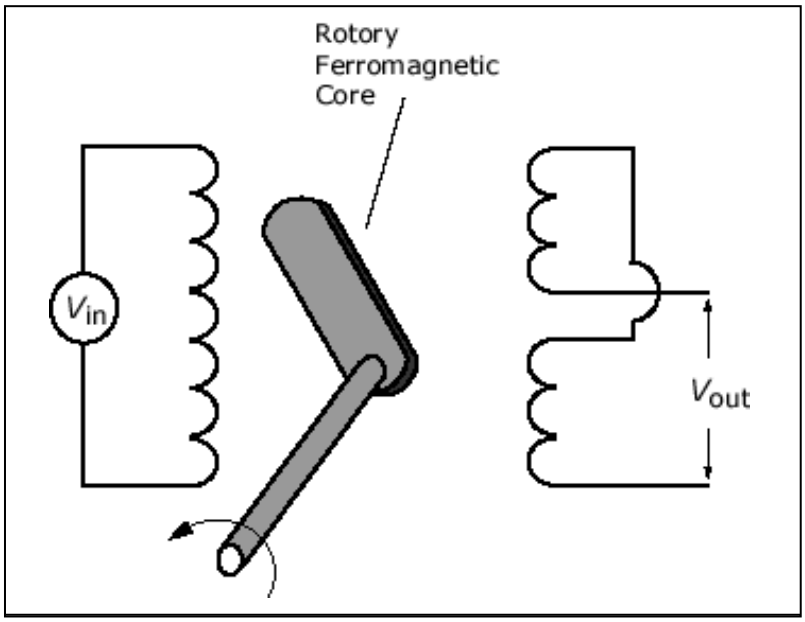

Figure 3-30. Typical Rotational Variable Differential Transformer

3.6.6 Potentiometers

Figure 3-31 contains a circuit description and Figure 3-32 contains a potentiometer photo. Potentiometers are probably the simplest, cheapest way to acquire angular position; however, they are not as durable and generally not as accurate as the devices discussed previously. Temperature drift, for example, is a large error source for potentiometers (see RTD section in Chapter 3, paragraph 3.4). For short-term measurements where high accuracy is not of paramount importance, the potentiometer is a good economic solution. Potentiometers with linear taper are used; in other words, a given displacement of wiper position is proportional to a change in resistance between the wiper and the end terminals. The electrical configuration is also simple. The potentiometer winding can be excited with virtually any level DC voltage within the current capacity of the device. If necessary, the voltage at the wiper can then be directly input to analog signal conditioning equipment for gain and filtering. Often, this signal will be a high-level analog signal that will not require any amplification. In cases where the range of angular displacement is very small, the potentiometer can be wired into a Wheatstone bridge configuration to increase sensitivity; however, the number of turns of wire used to construct the potentiometer will ultimately determine the resolution that can be obtained. For this reason, potentiometers are better suited for measuring relatively large angular displacements. Potentiometers have historically been constructed with turns of wire with a maximum shaft

rotational range of about 300°. Today, additional construction techniques are available, such as thin-film deposition. Such developments also permit full 360° measurement ranges without the need for end stops.

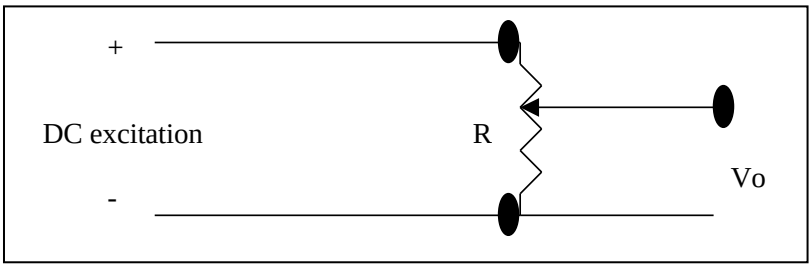

Figure 3-31. Potentiometer Circuit Diagram

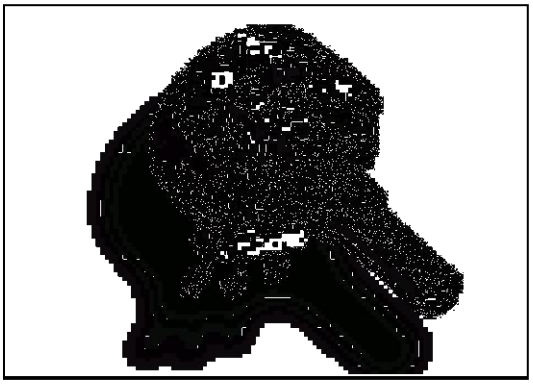

Figure 3-32. Typical Potentiometer

3.7 Rotational Speed

Some of the methods for sensing rotational or angular speed are discussed below. These methods include magnetic pickup and optical methods.

3.7.1 Magnetic pickups

One of the most common transducers for measuring the angular speed of a rotating member (gear, shaft, pulley, etc.) is the magnetic pickup. The magnetic pickup is comprised of a permanent magnet with a coil of wire wrapped around it. The coil ends are then attached to connector pins. The entire assembly is usually hermetically sealed because it is often located in environmentally challenged surroundings.

3.7.1.1 *Basic operation*

The basic theory of magnetic pickup operation is as follows. A coil of wire is magnetically coupled to a permanent magnet around which it is wrapped. When a ferrous material disturbs the magnetic field, the coil senses a change of flux and a small-induced voltage appears at the coil output wires. The rate of change of the flux (the speed of the rotating member), the “strength” of the magnet, and the size of the air gap will affect the output amplitude. The frequency of the output signal will be directly proportional to the rotational speed of the member. Typically, the air gap is on the order of a few millimeters. The shell of the magnetic pickup is often threaded so that it can be mounted and adjusted as needed.

The output from the magnetic pickup is usually processed one of two ways.

a. The first method is to convert the low-level AC output from the magnetic pickup to a high-level DC analog signal. This is done by a frequency to voltage converter. These devices are readily available from a number of vendors in an integrated component (IC) package. The frequency to voltage converter will be specified by the maximum frequency input in Hz, the minimum input level in mV, and the corresponding high-level voltage output per Hz.

b. The second method results in a digital value representing pulses per minute or second. This is described as an event or pulse counter. Minimum trigger levels may need to be determined for what constitutes a valid pulse. There are also pulse-conditioning modules that may be employed for "cleaning up" the signal prior to being counted. This will usually prevent random noise spikes from being counted as valid pulses. In any case, the output can be scaled to revolutions per minute or second, radians or milliradians per second, etc.

An example application is to acquire engine speed on a vehicle by mounting a magnetic pickup in the bell housing. The teeth on the flywheel for the starter serve as the stimulus for the pickup. Assuming the number of teeth on the flywheel is known, the number of pulses per revolution can be determined. The number of pulses or cycles per unit time can then be acquired as described earlier to obtain rotational speed.

The mounting position of the magnetic pickup is important to obtain reliable results. The pole piece of the pickup must usually be located within a couple millimeters of the gear teeth to obtain an acceptable output level. Of course, if the pickup is too close, gradual bearing wear of the rotating member or small foreign objects temporarily lodged in the gear teeth can result in damage to the pole piece of the pickup. It is safer to start out with a gap that is too wide and adjust accordingly than to start with a gap that is too narrow. Since the output level at low speeds can be on the order of a few mV, shielding of the output wires may be required in the presence of high electromagnetic interference (EMI) sources. The basic magnetic pickup design and operation is illustrated in Figure 3-33.

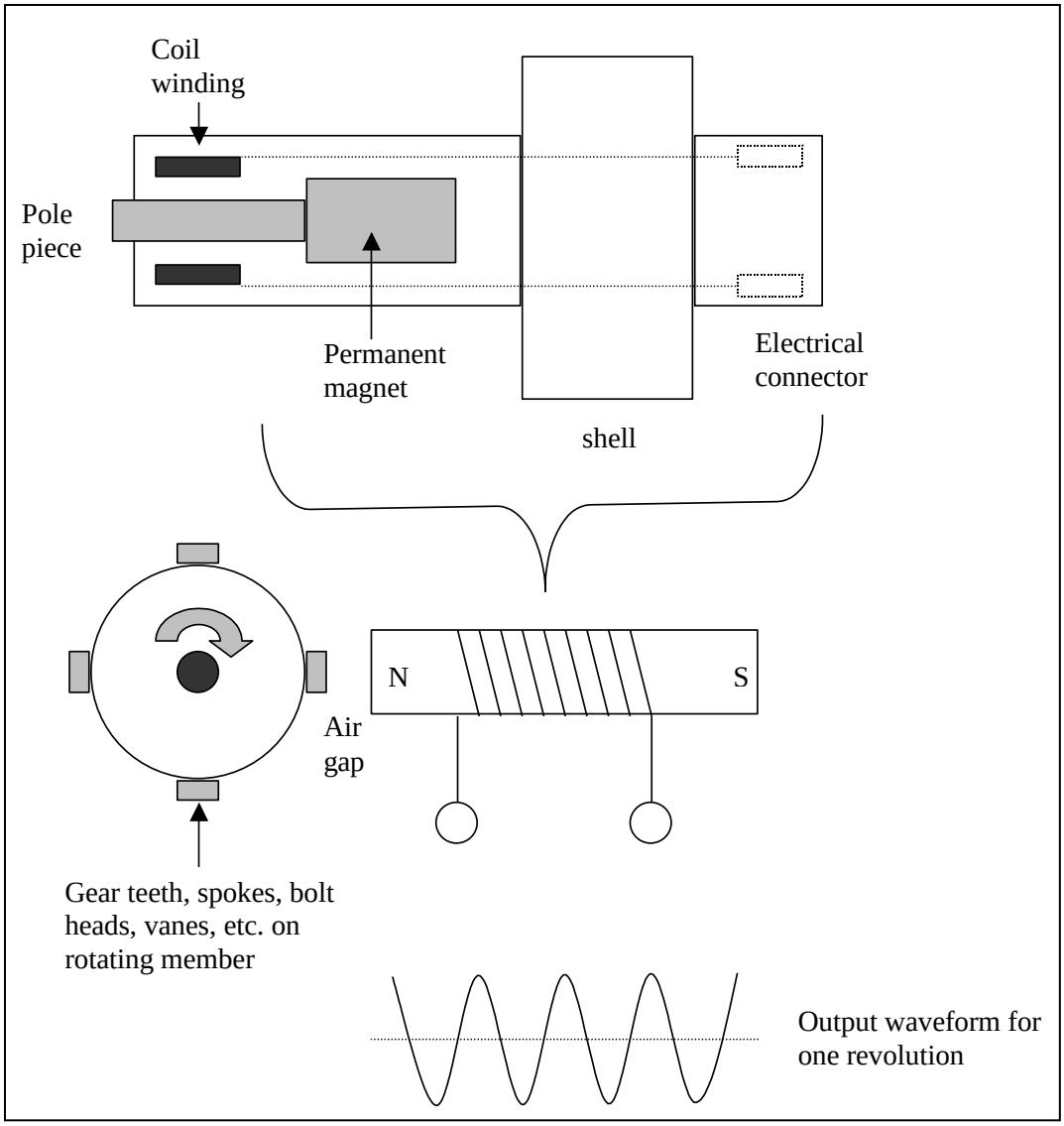

Figure 3-33. Typical Magnetic Pick-up Design

3.7.2 Optical methods

In addition to magnetic pickups, there are a few optical methods used to obtain rotational or angular speed. With the use of LEDs and photodiodes, non-contact optical speed sensing transducers can be constructed. Light-reflective tape or paint can be applied to a portion of a rotating item. If a light source, such as a lamp or LED, is positioned to illuminate the marked section and coincidentally, a reverse-biased photodiode is aimed at the same section, then each time the reflective portion of the rotating item is aligned with the light source and the photodiode, the photodiode will be forward-biased. This change in bias can be detected by measuring the voltage drop across a resistor placed in series with the photodiode as illustrated in Figure 3-34 below.

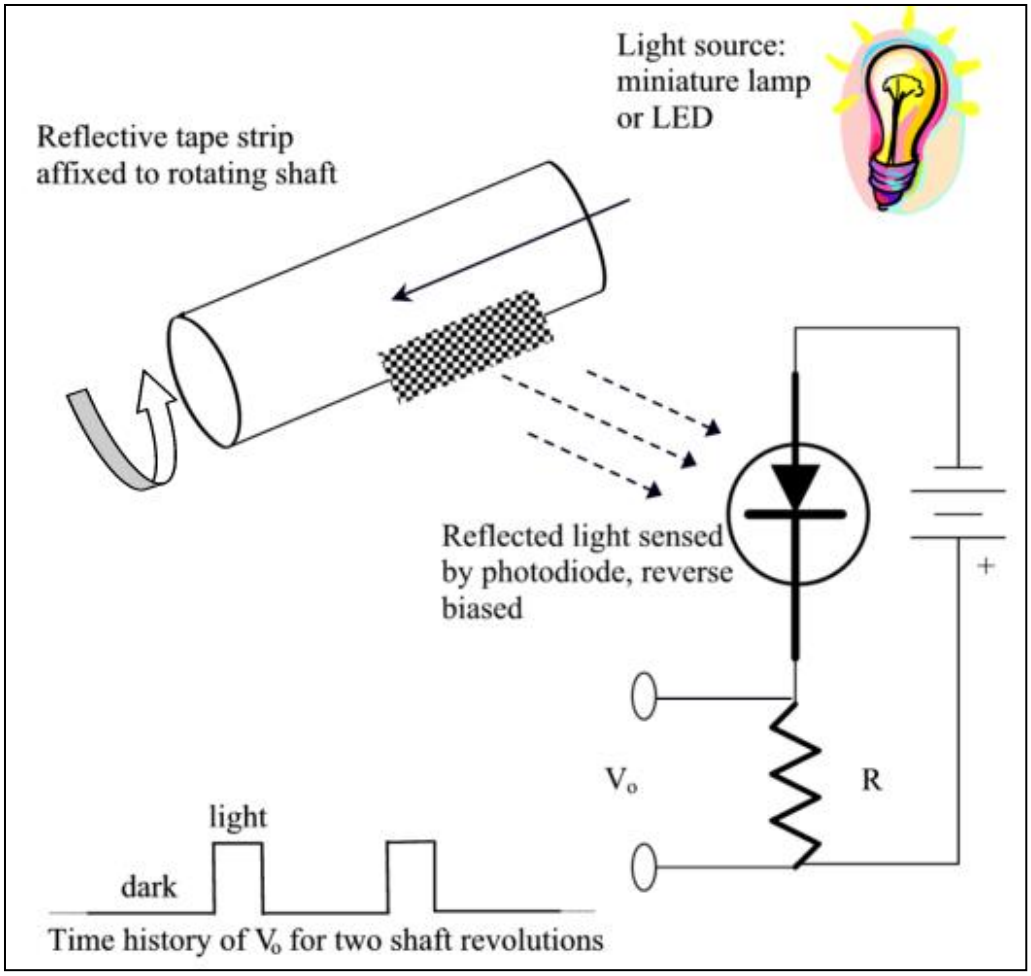

Figure 3-34. Optical Rotational Speed Measurement

Pre-packaged assemblies with LEDs and photodiodes are commercially available in a number of sizes and shapes (an example is in Figure 3-35). They are often grouped under the heading "proximity sensors" for which they are also suited. The operating range from the transducer to the rotating item can typically be from a few cm up to a few m. The physical constraints of available mounting locations and the surrounding environment usually dictates a few operating ranges within the sensor's limits. The width and number of reflective strips to be placed on the rotating item can be determined to set the duty cycle and frequency of the sensor output. These can be adjusted to optimize the measurement resolution within the bounds of the detector and the rest of the instrumentation system. The minimum and maximum anticipated speeds to be measured should be known to help make these choices.

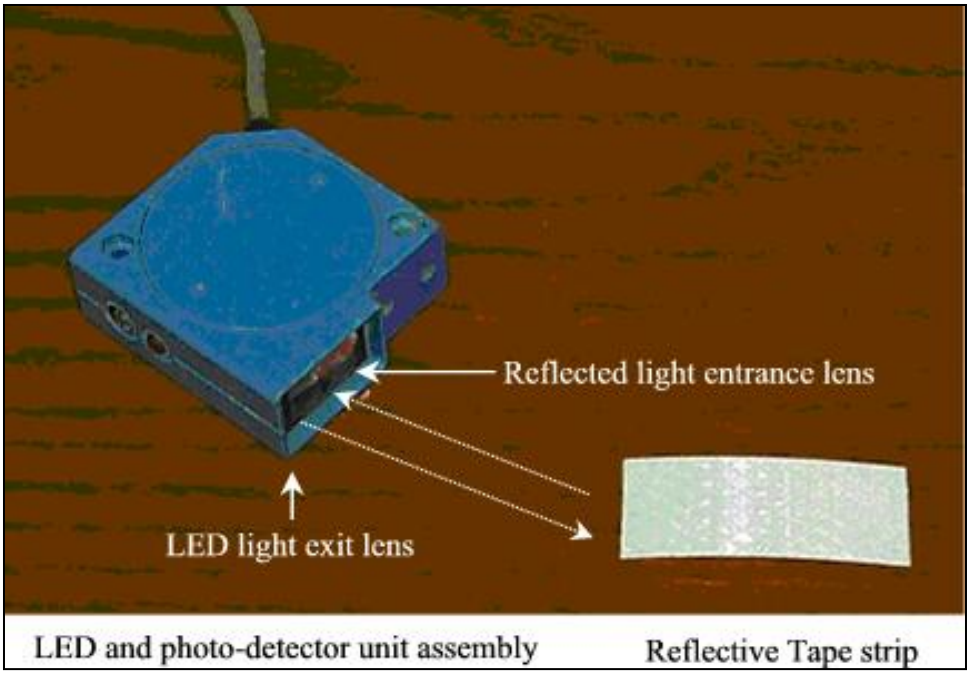

Figure 3-35. Typical Optical Sensor

Whether the output will be converted to an analog voltage by a frequency-to-voltage converter or totalized over a period is a consideration. The capabilities of the instrumentation system to which the transducer is to be connected will determine which method is employed.

Another optical device for acquiring rotational or angular speed is an incremental shaft encoder (Figure 3-36). In this case, however, the optical components are entirely housed within an enclosure and a shaft or coupling is provided to attach the device to the rotating item to be measured. A disc within the device etched with alternating opaque and transparent sectors passes between a light source and a detector (photodiode or phototransistor). The device is usually excited with +5 VDC and outputs a transistor-transistor logic-compatible pulse train with a duty cycle of 50% when the shaft is rotated. These devices are commercially available with a typical range of 1 to 1000 pulses per revolution. The incremental shaft encoder is also available with an additional output that will allow the user to determine which direction the item is rotating. A second set of alternating transparent/opaque sectors is etched on the rotating disc, 90° out of phase with the original set. This second pattern is sensed by another photodetector and output as another pulse train. This technique is known as quadrature encoding. Pulse counter/timer circuit modules are available to acquire this quadrature output and provide speed and direction (velocity) information. The minimum and maximum speed of interest, the mechanical linkage required between the transducer and the rotating item, and directional information if desired must all be taken into account when choosing this type of transducer.

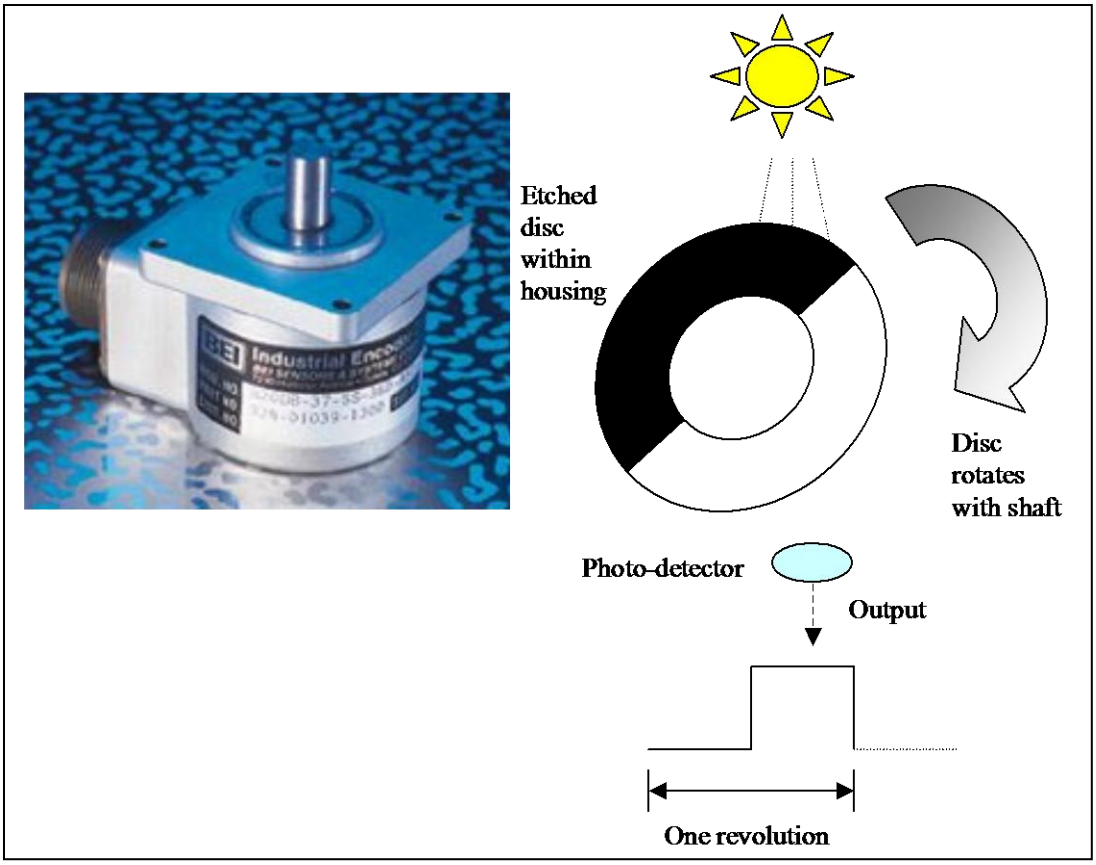

Figure 3-36. Optical Shaft Encoder

3.8 Photodetectors/Photodiodes

By generating charge carriers in response to photons, semiconductor structures yield robust, highly linear solid-state photodetectors for a variety of applications.

The purpose of any photodetector is to convert electromagnetic radiation into an electronic signal-ideally one that is proportional to incident light intensity. Because they are compact, versatile, and can be produced economically in high volume, positive-intrinsic-negative (PIN) diodes have become the detector of choice in applications from biomedical and vehicular instrumentation to telecommunications.

3.8.1 Construction

Photodiodes are constructed from semiconductor materials. The most popular choices are Si or GaAs. These materials absorb light over a characteristic wavelength range, 250 nanometers (nm) to 1100 nm for Si, and 800 nm to 2.0 micrometers for GaAs. When a proton of light is absorbed, it excites an electron and produces a single pair of charge carriers (an electron and a hole). The hole is simply the absence of an electron in the semiconductor lattice. Current passes through a semiconductor when the charge carriers separate and move in opposite directions. The trick in a photodiode is to collect photon-induced charge carriers as current or voltage at the electrodes, before they have a chance to recombine. This is achieved using a positive-channel, negative-channel (PN) or PIN diode junction structure, hence the term PIN photodiode.

An *n*-type semiconductor material is doped to produce an excess of electrons, whereas a *p*-type material has an excess of holes, or an electron deficiency. At the PN junction, this disparity creates a concentration gradient that causes electrons to diffuse into the *p*-layer and holes to diffuse into the *n*-layer. This diffusion results in an opposing electrical potential, often referred to as an internal bias. In a region spanning both sides of the junction, this electrical force causes any charge carriers to be rapidly swept to the appropriate layer. Because charge carriers cannot reside in this region, it is termed the depletion region.

In a generic PIN photodiode, light enters the device through the thin *p*-type layer. Absorption causes light intensity to drop exponentially with penetration depth. Any photons absorbed in the depletion region produce charge carriers that are immediately separated and swept across the junction by the natural internal bias. Charge carriers created outside the depletion region will move randomly, many of them eventually entering the depletion region to be swept rapidly across the junction. Some of them will recombine and disappear without ever reaching the depletion region. This movement of charge carriers across the junction upsets the electrical balance and produces a small photocurrent that can be detected at the electrodes.

The thickness of the depletion region can be modified by varying the semiconductor doping levels; however, the easiest way to expand this layer is to apply an external electrical bias (voltage). This is referred to as photoconductive operation, since the signal is detected as a current. Conventional unbiased operation is referred to as photovoltaic operation, because the signal is detected as a voltage. The latter is preferable for applications requiring high linearity of response and/or low dark noise.

3.8.2 Device optimization

It is very important that the instrumentation engineer have a complete understanding of requirements because manufacturers produce photodiodes in a wide range of shapes and sizes, with each design optimized to meet the specified parameters. The most important performance characteristics are response speed, quantum efficiency at the wavelength of interest, size and shape of the active area, response linearity, spatial uniformity of response, and dark noise or other noise sources that impact the sensitivity. Photodiode sensitivity is very important in low-light applications and is typically quantified by noise-equivalent power (NEP), defined as the optical power that produces a signal-to-noise ratio of unity at the detector output. The NEP is usually specified at a given wavelength and over a frequency bandwidth of 1 Hz and is therefore expressed in units of $W\sqrt{Hz}$.

Because the various performance parameters are interrelated, device design often involves careful tradeoffs to achieve optimum performance. For example, an application based on the detection of an unfocused source of light may require a detector with a large active area. If this application also requires high speed, then some compromise will have to be made because increasing device area raises capacitance, thereby increasing the R-C time constant, which slows device response. As a result, the majority of successful original equipment manufacturer applications use application-specific photodiodes.

Most performance parameters, particularly speed and noise, also are strongly influenced by the design of the signal-processing electronics. The electrical characteristics of even a simple photodiode can be remarkably complex, however, so engineers often represent the photodiode with an equivalent circuit. This is a virtual circuit consisting of multiple components whose overall behavior matches that of the photodiode. Certain photodiodes can be represented as a

current source in parallel with a diode, a capacitor, and shunt resistance, in addition to series resistance, for example. In more complex devices, the various noise sources (shot noise, Johnson noise, and 1/f noise) can be represented as additional current sources in parallel to the signal current source.

There are several types of signal processing electronics regularly used with photodiodes, but by far the most common is the trans-impedance amplifier (TIA). Normally, generating a highly amplified voltage from a given input current requires high input impedance. The downside of high input impedance is that it increases the R-C time constant. The TIA uses an operational amplifier to circumvent this problem and to deliver high effective input impedance while maintaining a circuit time constant several orders of magnitude lower than a conventional amplifier with the same impedance. Moreover, a well-designed TIA delivers several orders of magnitude of linear response and therefore does not compromise the inherent high linearity of a photodiode. Some assemblies also include sophisticated signal processing to ratio or normalize signals from a multi-element photodiode, for example. They may also incorporate optical elements to condition the light before it reaches the photodiode active area.

3.9 Piezoelectric Transducers

Transducers utilizing the piezoelectric (PE) effect include accelerometers, force transducers, and pressure transducers. They are used in numerous applications, such as environmental stress screening, vibration control, active vibration reduction, flight testing, wind tunnel testing, structural testing, modal analysis, seismic vibration, package testing, shock, motion, and attitude detection and stabilization, ride quality response and simulation, acoustic testing and noise, harshness, and vibration testing. The PE transducers play a significant role in numerous military and commercial applications. Measurements of dynamic oscillating forces, impact, or high-speed compression/tension under varying conditions may require sensors with special capabilities. Fast response, ruggedness, high stiffness, extended range, and the ability to also measure quasi-static forces are standard features associated with PE sensors. There is ample technical information to assist the instrumentation engineer on the proper use of PE transducers for vibration, acoustics, and force measurement. Sources include numerous technical papers and articles along with application notes and catalogs from the various PE transducer manufacturers.

3.9.1 Description of operation

The PE effect causes a realignment and accumulation of positively and negatively charged electrical particles, or ions, at the opposed surfaces of a crystal lattice, when that lattice undergoes stress. The number of ions that accumulate is directly proportional to the amplitude of the imposed stress or force. The PE transducers use a spring-mass system to generate a force proportional to the amplitude and frequency of the input measurand. The force applied to a PE element produces a charge on its terminal that is proportional to the mechanical motion. The stress imposed upon the PE material is the direct result of a physical input, such as acceleration, force, or pressure. To accomplish this, a mass is attached to the crystal that, when accelerated, causes force to act upon the crystal. The mass, also known as a seismic mass, creates a force directly proportional to acceleration according to Newton's law of motion, $F=ma$. Thin metallic electrodes collect the accumulated ions. Small lead wires interconnect the electrodes to an electrical connector or feed-through, to which cabling is attached. An advantage of PE materials is that they are self-generating and require no external power source. Two categories of PE material used in transducer designs are quartz and polycrystalline ceramics.

Quartz crystals are naturally PE when properly cut, but they have low sensitivity. Quartz is a naturally occurring crystal; however, the quartz used in sensors today is produced by a process that creates material free from impurities. Quartz is known for its ability to perform accurate measurement tasks, such as time and frequency, and is therefore used in products like wristwatches, radios, computers, and home appliances. Transducers benefit from several characteristics of quartz. Because quartz is naturally PE, it has no tendency to relax to an alternative state and is considered the most stable of all PE materials. Therefore, quartz-based sensors make consistent, repeatable measurements and continue to do so over long periods. Also, quartz has no output occurring from temperature fluctuations; this fact provides a formidable advantage when placing sensors in thermally active environments. Because quartz has a low capacitance value, the voltage sensitivity is relatively high compared to most ceramic materials, making it ideal for use in voltage-amplified systems. Conversely, the charge sensitivity of quartz is low, limiting its usefulness in charge-amplified systems, where low noise is an inherent feature. The useful temperature range of quartz is limited to approximately 600°F (315°C).

Ferroelectric materials are more commonly used. They are man-made ceramics that are given PE properties by a process of artificial polarization. Through the art of ceramics formulation, much higher charge sensitivity and operating temperature are attainable. The material shape can be easily configured to achieve special transducer characteristics. Special attention is given to output stability. Different specific ingredients yield ceramic materials that possess certain desired sensor properties. Each material offers distinct benefits, and material choice depends on the particular desired performance features. A wide variety of ceramic materials is used for transducers, and selecting material to use depends on the requirements of the particular application. Ceramic materials are manmade to become PE by a polarization process. This process, known as “poling,” exposes the material to a high-intensity electrical field that aligns the electric dipoles, causing the material to become PE. If ceramic is exposed to temperatures exceeding its range or to electric fields approaching the poling voltage, the PE properties may be drastically altered or destroyed. Accumulation of high levels of static charge also can have this effect on the PE output. Several classifications of ceramics exist. First, there are high-voltage-sensitivity ceramics used for accelerometers with built-in, voltage-amplified circuits. There are high-charge-sensitivity ceramics used for charge mode sensors with temperature ranges to 400°F (205°C). This same type of crystal is used in accelerometers containing built-in, charge-amplified circuits to achieve high output signals and high resolution. Finally, there are high-temperature ceramics used for charge mode accelerometers with temperature ranges to 600°F (315°C); these are useful for the monitoring of engine manifolds and superheated turbines.

3.9.2 Piezoelectric force transducers construction.

Most PE force transducers feature similar mechanical construction. Most are designed with thin quartz crystal discs that are sandwiched between upper and lower base plates as shown in Figure 3-37. An elastic, beryllium-copper stud holds the plates together and preloads the crystals. Preloading assures parts are in intimate contact to ensure linearity and provide the capability for tensile (force) measurements. This “sensing element” configuration is then packaged into a rigid, stainless steel housing and welded to assure the internal components are sealed against contamination. When force is applied to this sensor, the quartz crystals generate an electrostatic charge that is proportional to the input force. This charge output is collected on

electrodes that are sandwiched between the crystals. It is then either routed directly to an external charge amplifier or converted to a low impedance voltage signal within the sensor.

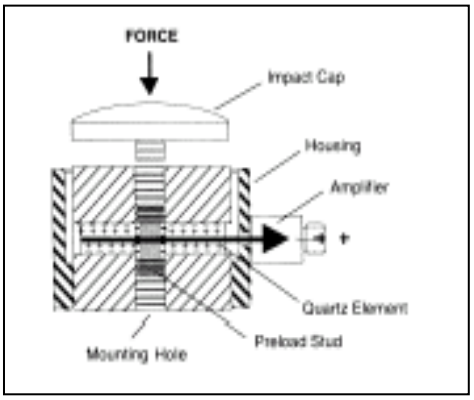

Figure 3-37. Typical Compression/Tension Force Transducer (courtesy of PCB Inc.)

3.9.3 Piezoelectric accelerometers

The construction and function of PE accelerometers are discussed in the following subparagraphs. Some information from this section is gleaned from the PCB Piezotronics corporate website.[5]

3.9.3.1 *Construction*

A variety of mechanical structures is available to perform the transduction principles required of a PE accelerometer. These configurations are defined by the nature in which the inertial force of an accelerated mass acts upon the PE material. A variety of designs is available. The single-ended compression design's high sensitivity and high resonance frequency make it suitable for general-purpose use. Some designs minimize the effects of base-coupled input and yield a more suitable device for low-level measurement, or those involving strain at the mount surface, or possible thermal transients. Shear designs permit miniature size and low mass for measuring shock and for testing lightweight panels and small components. Because the sensing element is well isolated from the base, shear accelerometers provide the best protection against pickup from base bending and acoustic noise. The shear excitation of the sensing element significantly reduces sensitivity to pyroelectric effects from temperature transients. The newer shear designs allow use of a broad range of PE materials, thereby enabling optimization for temperature extremes, exceptional stability. The newer designs also offer extremely high signal-to-noise ratio in all kinds of operating environments. Such terms as compression mode, flexural mode, and shear mode describe the nature of the stress acting upon the PE material. Current designs of PE accelerometers utilize, almost exclusively, the shear mode of operation for their sensing elements. Therefore, the information provided herein is limited to that pertaining to shear mode accelerometers (see Figure 3-38). Shear mode accelerometer designs feature sensing crystals attached between a center post and a seismic mass. A compression ring or stud applies a pre-load force to the element assembly to insure a rigid structure and linear behavior. Under acceleration, the mass causes a shear stress to be applied to the sensing crystals. This stress results in a proportional electrical output by the PE material. The output is collected by electrodes and transmitted by lightweight lead wires either to the built-in signal conditioning circuitry of integrated circuit PE sensors, or directly to the electrical connector for charge mode

[5] PCB Piezotronics corporate website. http://stage.pcb.com.

types. By having the sensing crystals isolated from the base and housing, shear mode accelerometers excel rejecting thermal transient and base-bending effects. In addition, the shear geometry lends itself to small size, which promotes high frequency response while minimizing mass loading effects on the test structure. With this combination of ideal characteristics, shear mode accelerometers offer optimum performance.

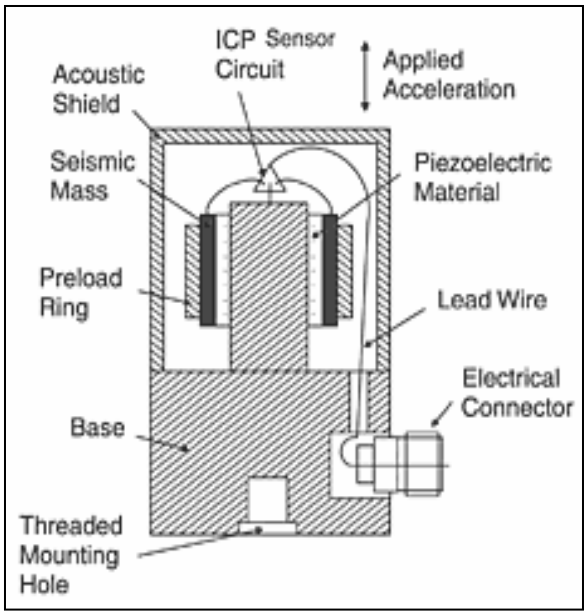

Figure 3-38. Typical Shear Mode Accelerometer (courtesy of PCB Inc)

For comparison, a typical compression accelerometer is shown in Figure 3-39.

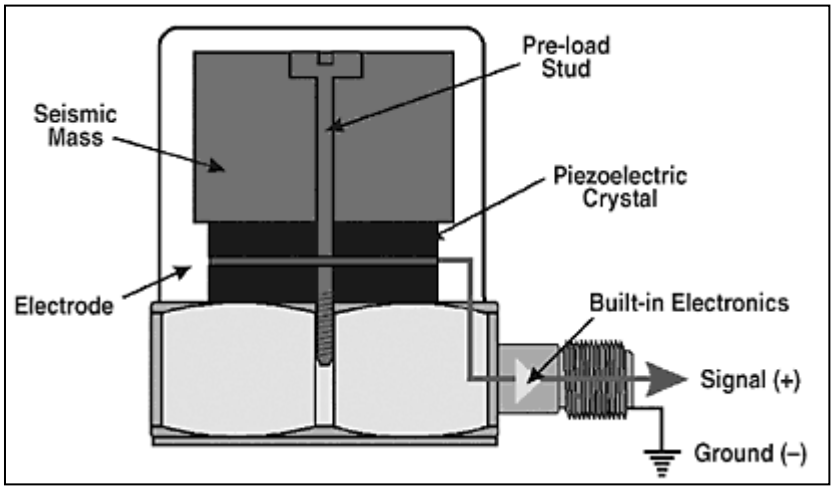

Figure 3-39. Typical Compression Accelerometer (courtesy of PCB Inc)

3.9.3.2 *Function*

Almost all mechanical systems and structures are subjected to vibration. This vibration has numerous sources, and ranges in its effects from minor nuisance to harmful or even dangerous. In order to deal with the effects of vibration its amplitude and frequencies must be measured. One of the most common ways to measure vibration is to use accelerometers, and one

of the most popular is the PE accelerometer. Some other means for measuring vibration are piezoresistive accelerometers, capacitive accelerometers, strain gage accelerometers, servo accelerometers, optical devices, motion picture, interferometry, etc. The PE accelerometer is so useful because it has a good combination of desirable characteristics, including a choice of high or low sensitivity, broad and flat frequency response, wide temperature tolerance, good linearity, ruggedness, small size, lightweight, and reasonable cost.

The PE accelerometer is a device that when it is subjected to acceleration produces an electrical signal. It contains a sensing element made of a PE material. Such a material has the unusual property that when force is applied to it, the material is slightly distorted, and opposing faces become negatively or positively charged. This property is known as the PE effect (Figure 3-40). The PE materials used in accelerometers are crystals or ceramics, such as quartz, barium titanate, lead titanate, lithium niobate, and others. Ceramic-type materials are most often used.

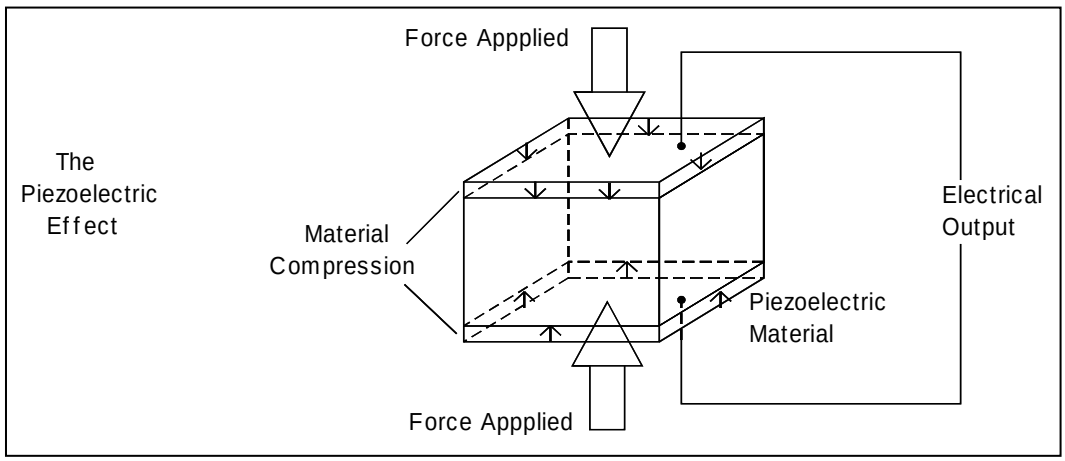

Figure 3-40. The Piezoelectric Effect

3.10 Electric Current Transducers

Electric current measurements are made for a variety of reasons and there are several transducer types, and hence several output signal types, for the instrumentation engineer to deal with. Current measurements can be made in conjunction with voltage measurements to determine electrical power consumption of a device or a series of loads. Current measurements can also be made at or near the typical sources of power such, as batteries, generators, alternators, or utility power lines. Transducers of both AC and DC exist. Some types of current transducers can be used to measure both.

3.10.1 Current shunts

Current shunts are nothing more than low-value precision resistors placed in a series connection in the conductor path of which we are interested in measuring (Figure 3-41). They traditionally have been constructed of a copper plate cut to a particular shape and thickness to yield a small voltage (IR drop) across their terminals when a specific current flows through them. Shunts are usually specified by their maximum current rating and corresponding voltage output. Such an example would be a 300-amp (A) shunt with a 60 mV output. The output (V_o) is linear such that 150 A would then yield 30 mV, etc. Large current shunts may require provisions for adequate airflow for heat dissipation (IR^2). In any case, the signal that we obtain from the

current shunt is a low-level voltage in direct proportion to the amount of current flow. This low-level voltage can be dealt with in a similar fashion to other low-level voltage signals with signal conditioning (i.e., gain, filtering, etc.). Measurement of AC can also be done with shunts, but often there are additional electronics to condition the output to a DC voltage level to represent an RMS current value.

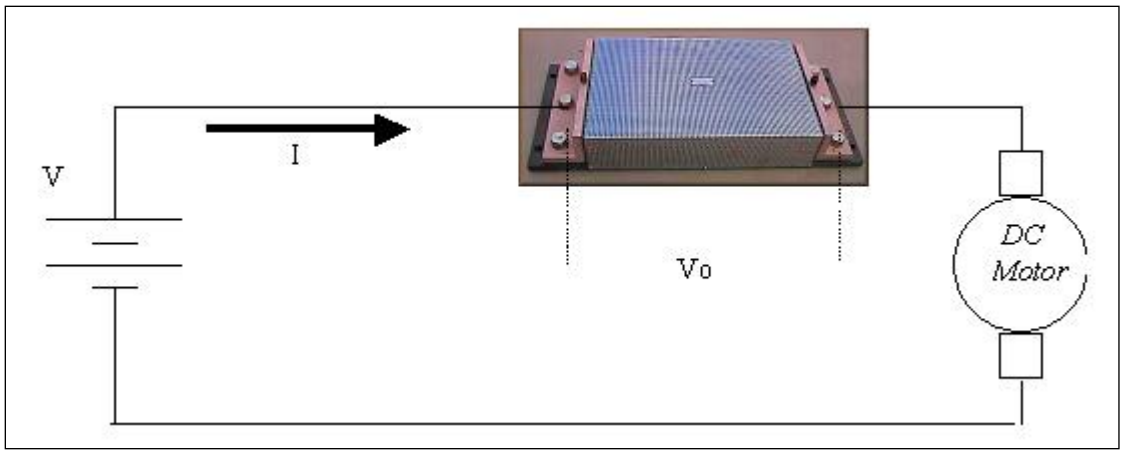

Figure 3-41. Current Measurement

3.10.2 Current transformers

Another type of current transducer is the current transformer (Figure 3-42). As the name implies, this device is only useful for measuring AC currents. Current transformers (or current loops as they are sometimes called) are usually constructed from toroid-shaped cores. The primary coil is connected in series with the current-carrying conductor and is constructed of a few turns of relatively large-gauge wire. Conversely, the secondary coil is constructed of a high number of turns of relatively small-gauge wire. The primary coil is usually deleted in the case where the conductor current exceeds 75 A. In this case, the current-carrying conductor passes directly through the toroid core and creates in essence a single-turn primary. The turns ratio is set to provide a specified secondary coil output voltage given a particular primary coil current. Clamp-on types are available for temporary applications. Once again, rectification electronics and filtering are usually employed before digitizing the signal.

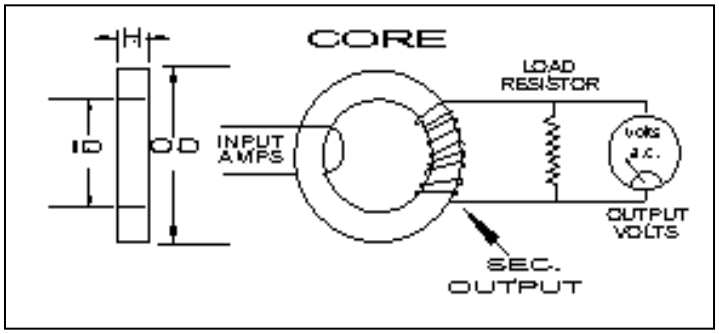

Figure 3-42. Current Transformer

3.10.3 Hall effect-type current transducer

Hall effect-type current transducers are useful for measuring both AC and DC currents (Figure 3-43). The current passing through the conductor of interest is made to affect the

magnetic field in which a Hall device is present. A disturbance of the magnetic field causes an output voltage change to occur from the Hall device. The device is a semiconductor with a high Hall constant. It produces an electric field that is transverse to both the magnetic field it is exposed to, and the excitation current passing through it. Hall effect current transducers are usually constructed of a ferromagnetic core with an air gap and the current carrying conductor passed through the middle. The Hall device is supplied with a constant excitation voltage and is located in the air gap of the core. The presence of a current flow in the conductor alters the electric field generated by the Hall device, and a corresponding voltage potential is output. The AC currents will generate proportional output AC voltages. Four connection points will be provided: two for the excitation voltage, two for the output voltage. A wide range of these transducers is available to suit laboratory and military environments. Open-loop and closed-loop devices exist. The open-loop types are economical and consume the least power. Closed-loop types are used when accuracy of the measurement is paramount. In either case, the output is generally high-level and types are available with split cores to ease installation.

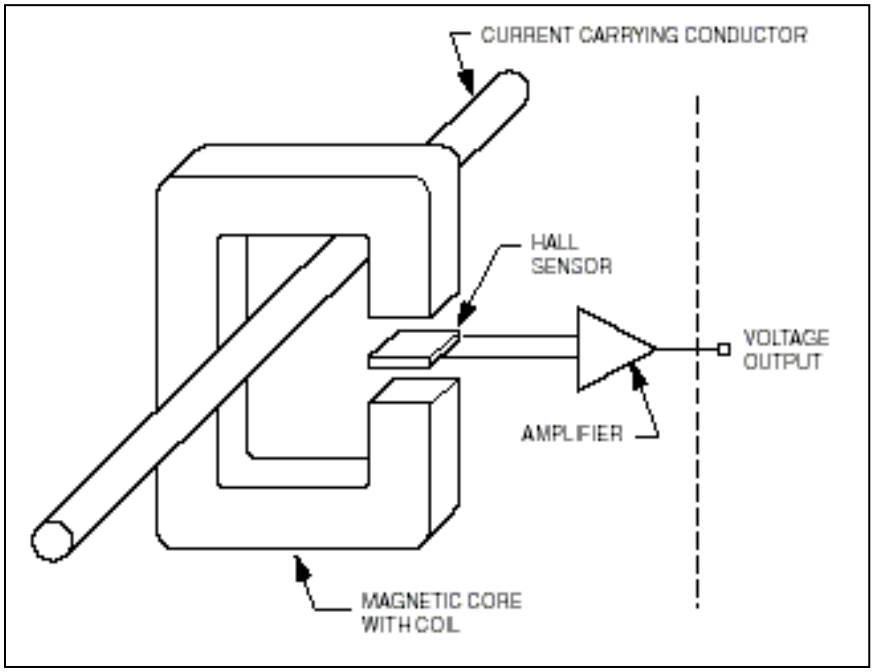

Figure 3-43. Hall Effect Current Transducer (Open Loop)

3.11 Anemometers

Several types of anemometers are discussed in the following subparagraphs. Some information for this section is gleaned from "Transactions" Volume 4,[6] a publication by Omega Engineering.

3.11.1 Sonic anemometer/thermometer

The sonic anemometer/thermometer (referred to as sonic) is capable of simultaneously measuring wind velocity components and sonic temperature at high data rates. Sonics consist of pairs of transmitters and receivers spaced 10 to 25 cm apart that send and/or receive sound pulses

[6] Omega Engineering. "Transactions" Volume 4. Available at http://www.omega.com/literature/transactions/Transactions_Vol_IV.pdf.

at a rate that is on the order of 100 Hz. The fundamental unit of measure for these instruments is time. These instruments operate on the principle that the time between transmission and reception of a sound pulse is a function of the speed of sound plus the wind speed component along the transmitter-receiver axis. A time differential is found by subtracting the time taken for travel in one direction from time of travel in the other direction. Because the speed of sound does not change appreciably in the fraction of a second between each transmission, the time differential is assumed to be due to the wind component along the transmitter-receiver axis. The horizontal wind vector can be resolved by a sonic with two axes and the three-dimensional wind vector can be resolved by one with three axes. By summing rather than differencing pairs of inverse transit times, the sonic simultaneously provides speed of sound measurements that can be converted to sonic temperatures.

Unlike mechanical wind sensors, the sonic does not gain or shed energy with the environment for measurement purposes. Therefore, sonics can produce wind component and temperature measurements at fast data rates without inertia, damping, overshoot, or threshold complications. Instrument response is bounded by the rate of acoustic wave front propagation between transducers (several hundred microseconds [μs]) and the instrument's data averaging algorithms; however, the advantages offered by sonic anemometry do not come without penalty. Sonic electronics equipment is complex, and therefore requiring the services of a skilled technician for operations and maintenance. Absolute calibration is possible with the use of a zero wind tube in a controlled atmosphere. The major remaining difficulties are flow distortion and flow separation due to the physical presence of the sonic array, although streamlined transducer designs and software corrections have minimized these problems. Sealed transducers permit operation in a wet environment where the performance of mechanical and thermal sensors is degraded. Precise array axis orientation is required for sonic anemometers to eliminate cross-axis signal contamination, and valid wind data can be collected only when flow is within the instrument's acceptance angle. Substantial software is needed to convert measurements made along a fixed axis of orientation to along-wind and crosswind components (x-axis and y-axis components), or to wind speed and direction.

The typical sonic sampling rate is 10 Hz or greater. Because of their high-accuracy time resolution, sonics are recommended when high-quality wind and turbulence measurements are needed. Sonic wind component and temperature measurements can also be used to compute the vertical flux of sensible heat (or momentum) using the eddy correlation method. This flux is derived from the covariance of vertical velocity and temperature (or along-wind component) fluctuations. Additionally, sonic vertical wind component measurements can be paired with high-resolution humidity measurements to compute the vertical flux of latent heat from the covariance of vertical velocity and humidity fluctuations. The fluxes of sensible heat, latent heat, and momentum characterize the micrometeorological state of the surface boundary layer.

3.11.2 Constant-temperature anemometers

Constant-temperature anemometer (CTA) systems consist of amplifiers, a data acquisition system, and a hot-wire or hot-film element mounted in a Wheatstone bridge that is balanced to maintain the sensor at a control temperature well above the ambient temperature. As wind blowing across the sensor cools the heated element, the bridge network responds by sending current through the element until balance is restored. System electronics sense and record the resulting voltage changes across the bridge. The heat loss experienced by the element

(parameterized by the Nusselt number, Nu) is related to the flow velocity (parameterized by Reynolds number, Re) across the element by the following equation:

$$N = A + B(\mathrm{Re}^{p}) \qquad \text{Eqn. 3-17}$$

3.11.3 Hot-wire anemometers

The term anemometer was derived from the Greek words anemos (wind), and metron (measure). Mechanical anemometers were first developed back in the 15th century to measure wind speed.

A hot-wire anemometer consists of an electrically heated, fine-wire element (0.00016" in diameter and 0.05" long) supported by needles at its ends (see Figure 3-44). Tungsten is used as the wire material because of its strength and high temperature coefficient of resistance. When placed in a moving stream of gas, the wire cools; the rate of cooling corresponds to the mass flow rate.

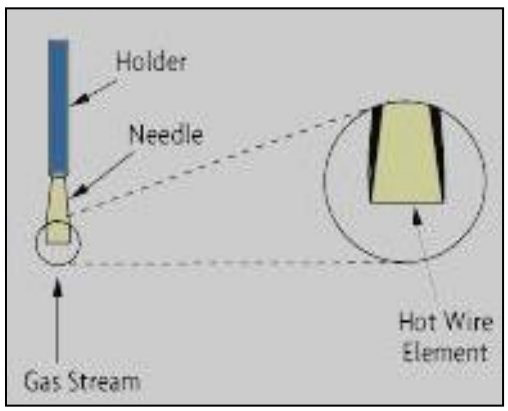

Figure 3-44. Hot Wire Anemometer

The circuitry of the heated sensing element is controlled by one of two types of solid-state electronic circuits: constant-temperature or constant-power. The constant-temperature sensor maintains a constant temperature differential between a heated sensor and a reference sensor; the amount of power required to maintain the differential is measured as an indication of the mass flow rate.

The CTAs are popular because of their high-frequency response, low electronic noise level, immunity from sensor burnout when airflow suddenly drops, compatibility with hot-film sensors, and applicability to liquid or gas flows.

Constant-power anemometers do not have a feedback system. Temperature is simply proportional to flow rate. They are less popular because their zero-flow reading is not stable, temperature and velocity response is slow, and temperature compensation is limited.

3.11.4 Air duct traversing

Anemometers are widely used for air duct balancing. This is accomplished by placing multiple anemometers in a cross-section of the duct or gas pipe and manually recording the velocity readings at numerous points. The mass flow rate is obtained by calculating the mean

velocity and multiplying this by the density and by the cross-sectional area measurement of the duct.

For cylindrical ducts, the log-linear method of traversing provides the highest accuracy because it takes into account the effects of friction along the walls of the duct. Because of the number of measurements, Figure 3-45, air duct traversing is a time-consuming task. Microprocessor- based anemometers are available to automate this procedure.

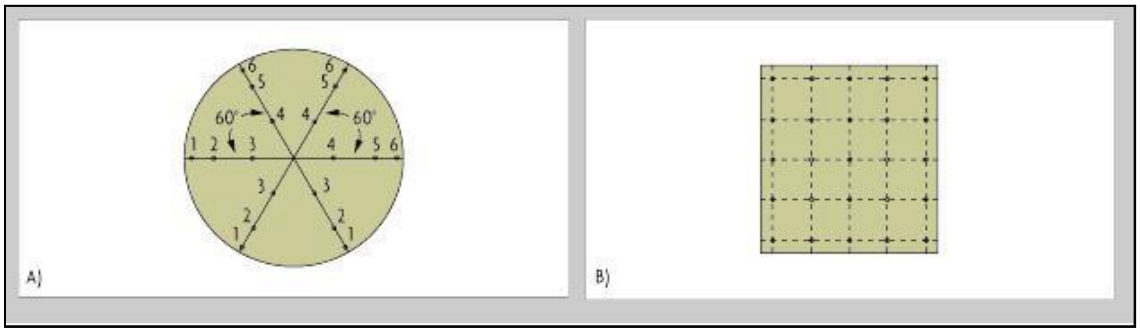

Figure 3-45. Anemometer Measuring Station

Because of the small size and fragility of the wire, hot-wire anemometers are susceptible to dirt build-up and breakage. A positive consequence of their small mass is fast speed of response. They are widely used in heating, ventilation, and air conditioning (HVAC) and ventilation applications. Larger and more rugged anemometers are also available for more demanding industrial applications. To ensure the proper formation of the velocity profile, a straight duct section is usually provided upstream of the anemometer station (usually 10 diameters long). A conditioning nozzle is used to eliminate boundary layer effects. If there is no room for the straight pipe section, a honeycomb flow straightener can be incorporated into the sensor assembly.

A hot-wire anemometer consists of a thin (5 mm or 12 mm) tungsten wire array consisting of one or more wires, each of which is mounted in a Wheatstone bridge connected through a series of amplifiers. Wire resistance varies with its temperature; air blowing over the heated wire reduces wire temperature. A fast-acting bridge circuit maintains the wire at constant overheat temperature (well above ambient temperature) by sending varying amounts of electrical current through the wire in response to the wind's cooling effect. The result is a measurement of wind flow across the axis of the wire. An array of multiple wires can resolve multiple wind velocity components. Because of the small size and fast response of the probes, hot-wire anemometers are used for high frequency (~1000 Hz) velocity fluctuation measurements. Hot-wire anemometry should be used to characterize fine-scale turbulence within the roughness sub-layer. Because of the need for frequent calibration, the hot-wire anemometers should be operated on a sampling basis over 15-minute periods.

3.12 Actinometers

Actinometers provide measurements of solar and terrestrial radiation. These measurements can be used to define the incoming and outgoing long-wave and short-wave radiation and radiative balance. Pyranometers are used to obtain hemispheric incoming and outgoing short-wave radiation (wavelengths of 0.3 to 4.0 millimeters [mm]), and pyrgeometers

are used to obtain hemispheric incoming and outgoing long-wave radiation (wavelengths of 4.0 to 50 mm). Pyranometers consist of thermopiles, a series of thermoelectric junctions between two dissimilar metals covered by a Schott glass dome that passes radiation in the visible part of the spectrum. A temperature gradient is created by placing one set of junctions in thermal contact with a non-wavelength-selective black surface, while isolating the other set. The temperature gradient produces a voltage that is proportional to the temperature difference and hence to the intensity of incident radiation. Pyrgeometers are of similar design except that the covering dome acts as a band-pass filter for long-wave radiation.

3.13 Pitot-Static Systems

The Pitot-static system is the classic method for measurement of aircraft and airflow velocity. The following subparagraphs describe Pitot-static systems, their basic theory of operation, properties, characteristics, and transducers used in conjunction with them.

3.13.1 Basic theory of operation

The simplest version of the system is composed of a source of moving air collected in the Pitot tube, a streamlined, hollow probe located forward on the aircraft in undisturbed air, and a source of ambient air called the "static port". The pressure created by moving air, called dynamic air pressure (from the Pitot tube or probe), and the static air pressure caused by the weight of the earth's atmosphere (from the static port), are supplied to the aircraft instruments (see Figure 3-46). The airspeed indicator uses the dynamic pressure and static pressure to indicate the aircraft horizontal velocity through the air mass. The altimeter measures the static pressure to provide aircraft altitude above sea level. The vertical speed indicator uses changes in the static air pressure over time to determine the aircraft upward and downward velocity.

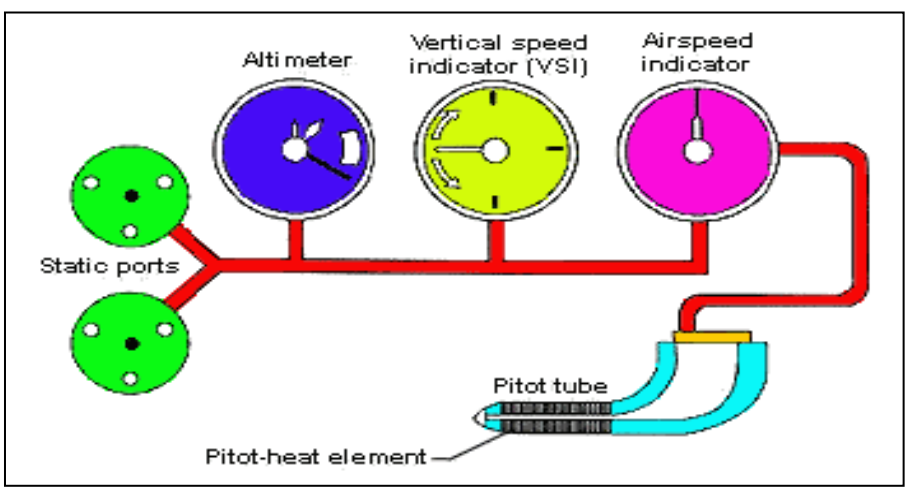

Figure 3-46. Basic Pitot-Static System and Aircraft Instrumentation

The static port is often located on the side of the aircraft fuselage to receive only outside air pressure unaffected by aircraft movement. The static port is sometimes combined with the Pitot tube as openings along the side of the Pitot probe to provide greater accuracy for higher speed aircraft, or for airframes where there are no acceptable locations for a separate static port.

In more complex systems, a transducer is used to measure the difference in dynamic and static air pressure and to convert the pressure difference into an electrical signal that is more

easily transmitted throughout the aircraft. The electrical signal is used by an air data computer to measure the aircraft motion and altitude based on the static pressure and the difference signal between the dynamic and static pressure. The results of computations are used by a variety of aircraft instruments beyond the basic altimeter and vertical speed indicator, such as autopilots, altitude alerters, flight management systems, electronic displays, and navigation systems.

The transducers use a variety of sensors to perform pressure measurements, including vibrating elements, capacitive variation, and the relative newcomers of solid-state sensors including micro-electro-mechanical and Si integrated-circuit types.

A diagram of the Pitot-static system operation is shown at Figure 3-47. In the diagram, the static port is combined with the Pitot in the same assembly. The transducer utilizes the difference between static pressure (simply the ambient air pressure surrounding the aircraft and Pitot probe assembly) and dynamic pressure created from the air in motion as it rams into the open end of the Pitot tube (note "V" in Figure 3-47). The dynamic pressure is created by the velocity *V* of the airflow as it enters the tube. The air entering the tube has both dynamic pressure from movement, and static pressure due to the weight of the earth's atmosphere. These two components are summed together as P_t, or total pressure. As shown in Figure 3-47, the dynamic pressure is proportional to the density of the air, *r*, multiplied times the air velocity *V* squared and divided by 2. By subtracting the static portion of the total air pressure, and using the formula shown, the velocity of the airflow, and thus the aircraft, can be computed.

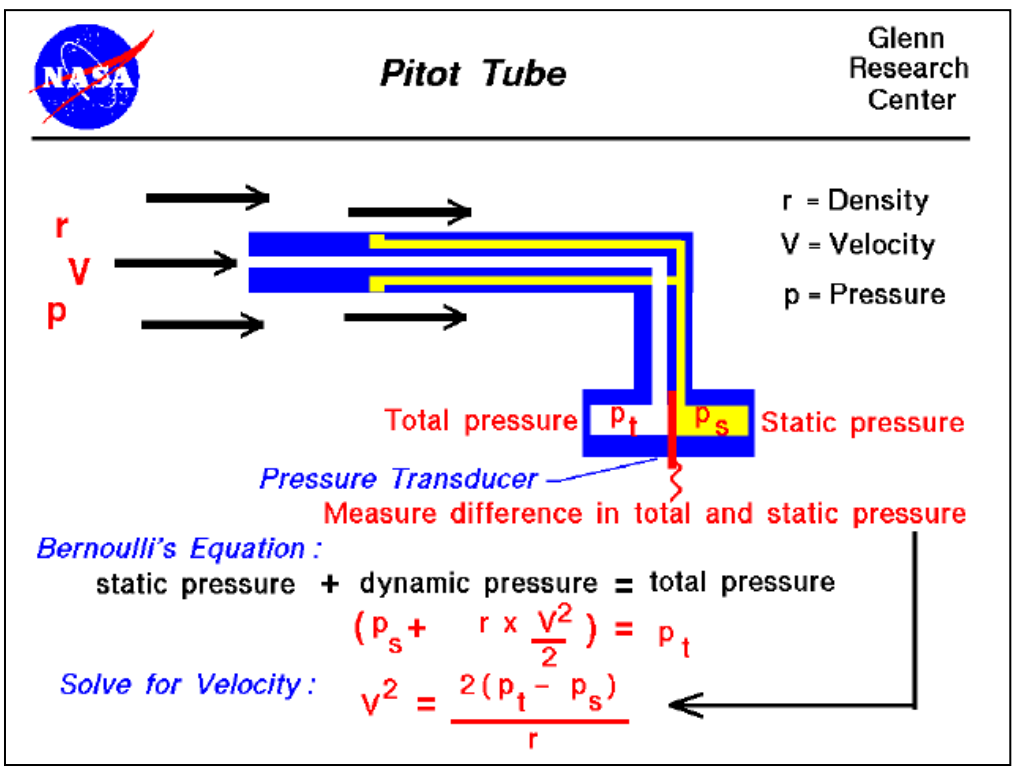

Figure 3-47. Pitot-Static System Operation

3.13.2 Properties and characteristics

The properties and characteristics of Pitot-static systems discussed below include the Mach number range, yaw and pitch angle range, boundary effects, Reynolds number range,

turbulence errors, and time constant. This information is gleaned from United Sensor Corp's webpage about Pitot-static probes.[7]

3.13.2.1 *Mach number range*

The lower usable limit for Pitot-static probes depends on the sensitivity of the readout device used with the probe. The lower limit is approximately at a Mach number of 0.06 or velocity of 70 fps for air at standard atmospheric conditions since a differential pressure (D/P) of 1" of water, for example is about the minimum that can be measured with 1% accuracy with ordinary slant gages. While there is no minimum Mach number for the probe itself, there are viscous drag effects that should be considered when using a probe in a low-velocity fluid field (See Reynolds Number Range, Section 3.13.2.5). The upper limit is at about Mach 0.95 for the total pressure reading and 0.70 for the static as shown in Figure 3-48. The static reading is accurate to 1.5% up to Mach 0.70 and to 0.5% to Mach 0.50. Due to the formation of local shock waves on and around the tip of the probe at this point the calibration becomes erratic and the reading can vary as much as 10% with little changes in flow conditions or proximity to solid boundaries. Above Mach 1.0, both the total and static readings vary considerably from true stream values but they can be corrected theoretically.

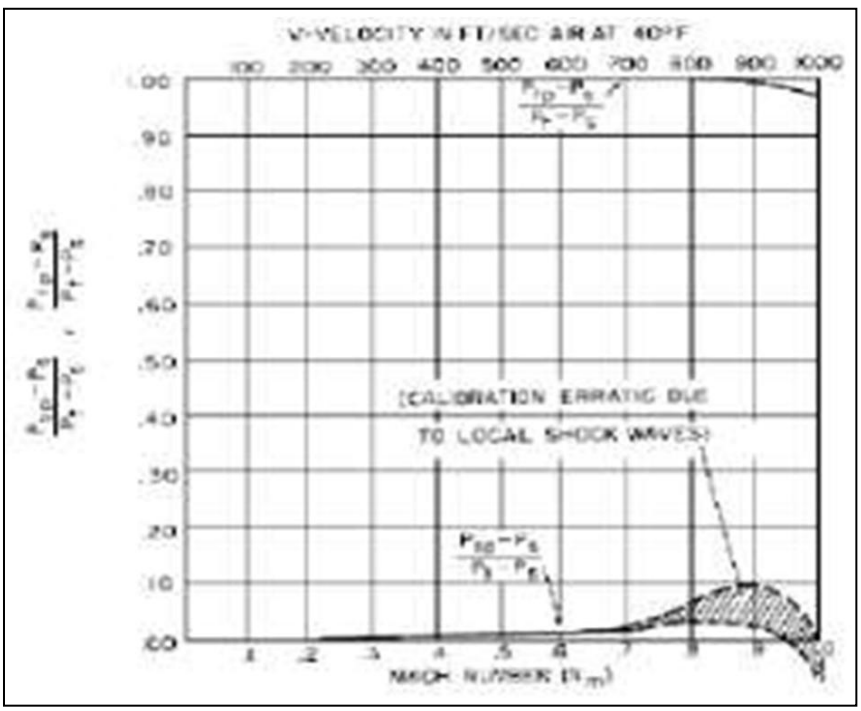

Figure 3-48. Mach Number Range

P_t Total pressure (impact / stagnation pressure)
P_s Static pressure (ambient / stream pressure)
P_{tp} Indicated total pressure
P_{sp} Indicated static pressure

[7] United Sensor Corp. Pitot-Static - Properties and Characteristics. http://www.unitedsensorcorp.com/pitot-properties.html. Last viewed 23 January 2013.

3.13.2.2 *Yaw and pitch angle range*

If the fluid stream is not parallel to the probe head, errors occur in both total and static readings. These are the most important errors in this type of instrument since they cannot be corrected without taking independent readings with another type of probe. Swivel-head probes are used on helicopters and vertical and short takeoff and landing aircraft to reduce these effects and for safety purposes. Figure 3-49 and Figure 3-50 show the errors in total and static pressure, velocity, and weight flow at various yaw and pitch angles.

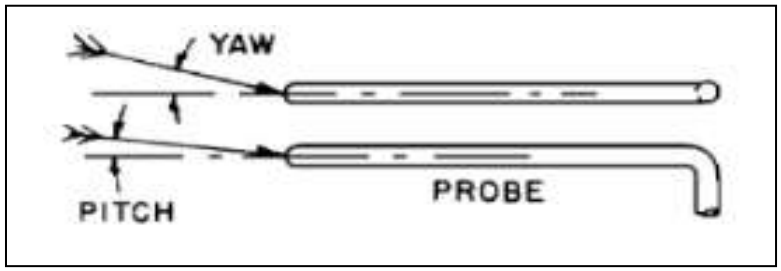

Figure 3-49. Yaw and Pitch Angle Error

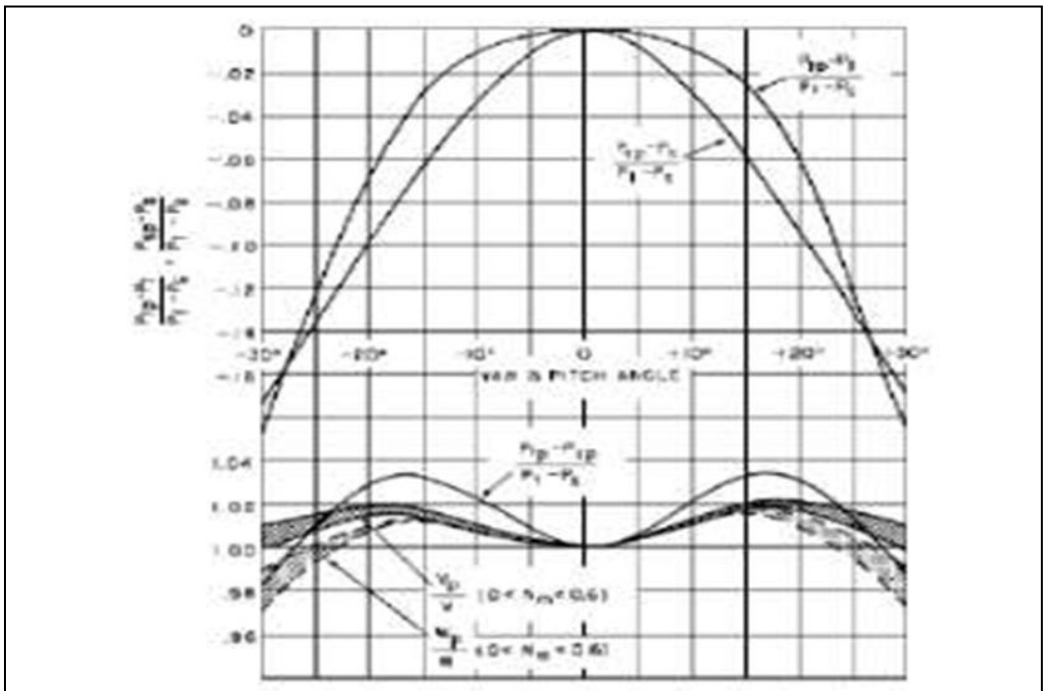

VP: Indicated velocity calculated from Ptp and Psp using standard equations.
W: Weight flow rate — lbs. sec x ft^2
Wp: Indicated weight flow rate from Ptp and Psp

Figure 3-50. Yaw and Pitch Angle Error

Note that yaw and pitch angles have exactly the same effects on the readings. For angles of attack higher than 5°, the errors in total and static pressure increase quite rapidly; however, they tend to compensate each other such that the probe yields velocity and weight flow readings

accurate to 2% up to angles of attack of 30°. This is the main advantage of the Pitot design over other types.

3.13.2.3 *Typical yaw and pitch measuring device*

A photo of a typical yaw and pitch measuring device for aeronautical applications is shown in Figure 3-51.

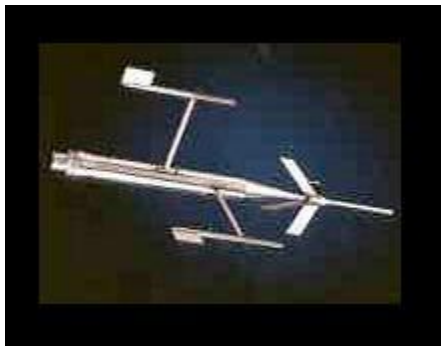

Figure 3-51. Swivel Head Probes

3.13.2.4 *Boundary effects*

The static pressure indication is sensitive to distance from solid boundaries. As shown in Figure 3-52 this error increases the indicated velocity pressure at a Mach number 0.25. The probe and boundary form a venturi passage that accelerates the flow and decreases the static pressure on one side. According to the curve the static readings should not be taken any closer than five tube diameters from a boundary for a 1% accuracy. A distance of ten tube diameters is even safer.

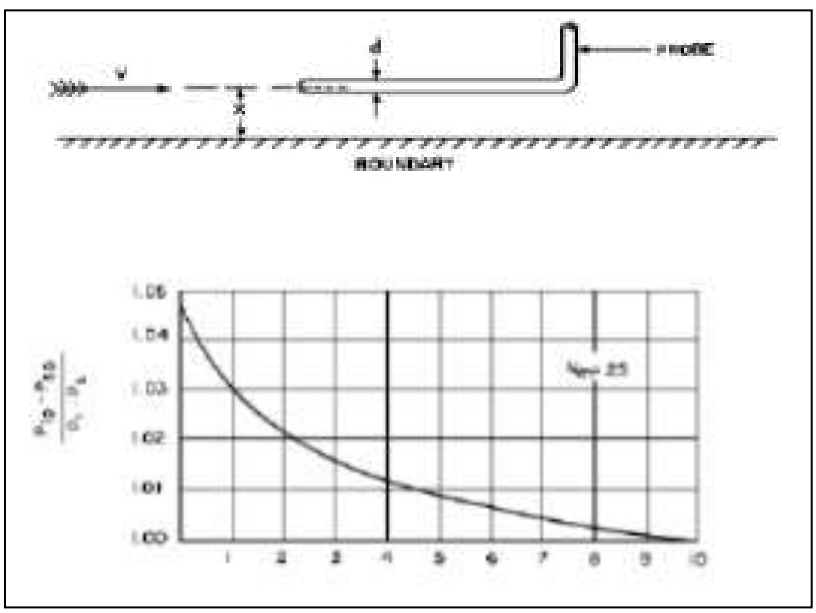

Figure 3-52. Boundary Effects

3.13.2.5 *Reynolds number range*

Pitot-static probes are not directly affected by Reynolds number (except at very low velocities). Therefore, in liquids where compressibility effects are absent, their calibration is

substantially constant at all velocities. The minimum Reynolds number for the total pressure measurement is about 30 where the characteristic length is the diameter of the impact hole. Below this value, the indicated impact pressure becomes higher than the stream impact pressure due to viscosity effects. This error is only noticeable in air under standard atmospheric conditions for velocities under 12 fps with impact holes 0.010” diameter or less.

3.13.2.6 *Turbulence errors*

Pitot-static tubes appear to be insensitive to isotropic turbulence, which is the most common type. Under some conditions of high intensity and large-scale turbulence, the angle of attack at a probe can vary over a wide range. This probe would presumably have an error corresponding to the average yaw or pitch angle produced by the turbulence.

3.13.2.7 *Time constant*

The speed of reading depends on the size of the pressure tubes to the manometer, the length and diameter of the pressure passages inside the probe, and the displacement volume of the manometer. For any of the standard tubes down to 1/8” diameter the time constant is very short; but it increases rapidly for smaller diameters. For this reason 1/16” OD is the smallest recommended size for ordinary use; this will take 15 to 60 seconds to reach equilibrium pressure with ordinary manometer hook-ups. These tubes have been made as small as 1/32” outside diameter (OD), but their time constant is as long as 15 minutes and they clog up very easily with fine dirt in the flow stream. If very small tubes are required, it is preferable to use separate total and static tubes rather than the combined total-static type. Where reinforcing stems are specified on small sizes, the inner tubes are enlarged at the same point to ensure minimum time constant.

The following tables and figures are offered for your understanding.

Table 3-1. Standard Pitot-Static Models (Part 1 of 3)

Ordering Part Number	Sensing Stem Diameter d	Probe Length a	Reinforcement		Pressure Take-Off Diameter e	Tip Joining Compound		Mounting Chuck	
			Diameter m	Length b		Metal Filler	Maximum Operating Temp.	Material	Thread
PAA-"a"-KL	1/16"	Standard Lengths are 8" 12" 18" 24"			5/32" Swaged down to 1/8"	Nicrobraz	1500°F	Stainless	1/8" NPT
PAB-"a"-KL	3/32"								
PAC-"a"-KL	1/8"								
PAD-"a"-KL	3/16"								
PAE-"a"-M	1/4"				1/4"				1/4" NPT
PAE-"a"-M-W						Weld	2000°F		
PBA-"a"-F-"b"-KL	1/16"		1/8"	6" to 22"	5/32" Swaged down to 1/8"	Nicrobraz	1500°F		1/8" NPT
PBB-"a"-F-"b"-KL	3/32"								
PBC-"a"-G-"b"-KL	1/8"		1/4"						1/4" NPT
PBD-"a"-G-"b"-KL	3/16"								
PBE-"a"-H-"b-M	1/4"		3/8"		1/4"				3/8" NPT
PBE-"a"-H-"b"-M-W						Weld	2000°F		

Table 3-2. Standard Pitot-Static Models (Part 2 of 3)

Ordering Part Number	Sensing Stem Diameter d	Probe Length a	Reinforcement Diameter m	Reinforcement Length b	Pressure Take-Off Diameter e	Tip Joining Compound Metal Filler	Tip Joining Compound Maximum Operating Temp.	Removeable Take - Off Material	Ferrule Type
PCA-"a"-KL	1/16"	Standard Lengths are 8" 12" 18" 24"			5/32 Swaged down to 1/8"	Nicrobraz	1500°F	Stainless Steel	Teflon
PCB-"a"-KL	3/32"								
PCC-"a"-KL	1/8"								
PCD-"a"-KL	3/16"								
PCE-"a"-M	1/4				1/4"				
PCE-"a"-M-W						Weld	2000°F		
PDA-"a"-F-"b"-KL	1/16"		1/8"	6" to 22"	5/32" Swaged down to 1/8"	Nicrobraz	1500°F		
PDB-"a"-F-"b"-KL	3/32"								
PDC-"a"-G-"b"-KL	1/8"		1/4"						
PDD-"a"-G-"b"-KL	3/16"								
PDE-"a"-H-"b"-M	1/4"		3/8"		1/4"				
PDE-"a"-H-"b"-M-W						Weld	2000°F		

Table 3-3. Standard Pitot-Static Models (Part 3 of 3)

Ordering Part Number	Sensing Stem Diameter d	Probe Length a	Reinforcement Diameter m	Reinforcement Length b	Pressure Take-Off Diameter e	Tip Joining Compound Metal Filler	Tip Joining Compound Maximum Operating Temp.	Mounting Chuck Material	Mounting Chuck Thread
PSA-"a"	1/16"	Standard Lengths are 8" 12" 18" 24"	Optional		Same as the Probe Diameter	Nicrobraz	1500°F	Optional	
PSB-"a"	3/32"								
PSC-"a"	1/8"								
PSD-"a"	3/16"								
PSE-"a"	1/4"								
PTA-"a"	1/16"								
PTB-"a"	3/32"								
PTC-"a"	1/8"								
PTD-"a"	3/16"								
PTE-"a"	1/4"								

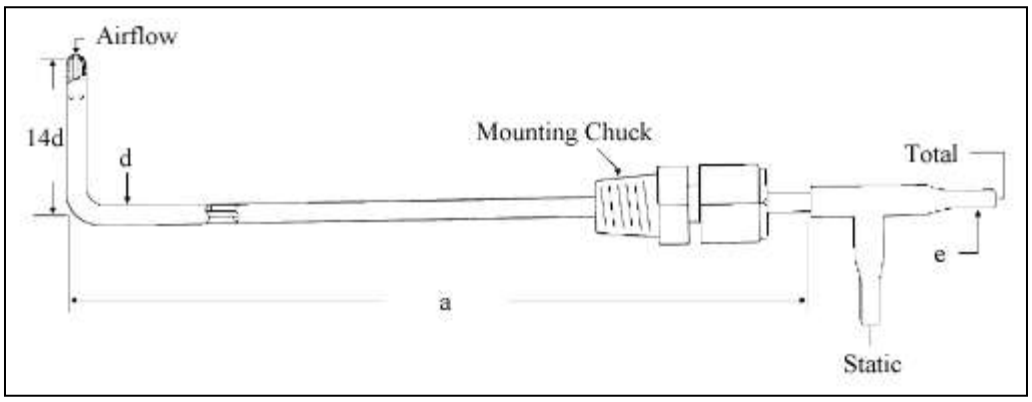

Figure 3-53. Type PA Probe

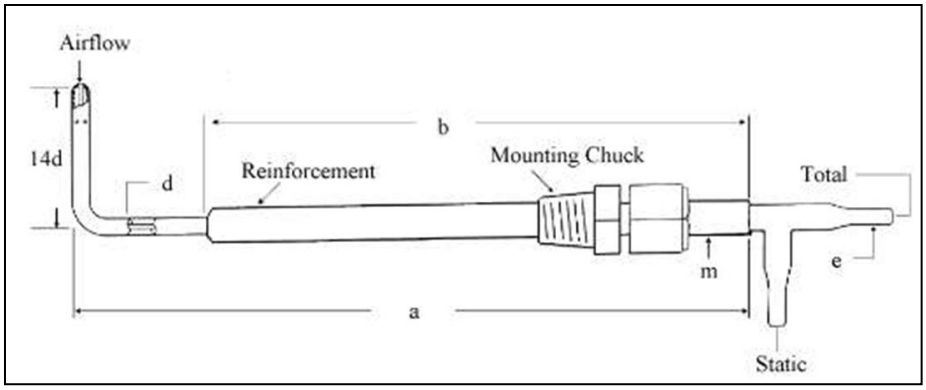

Figure 3-54. Type PB Probe

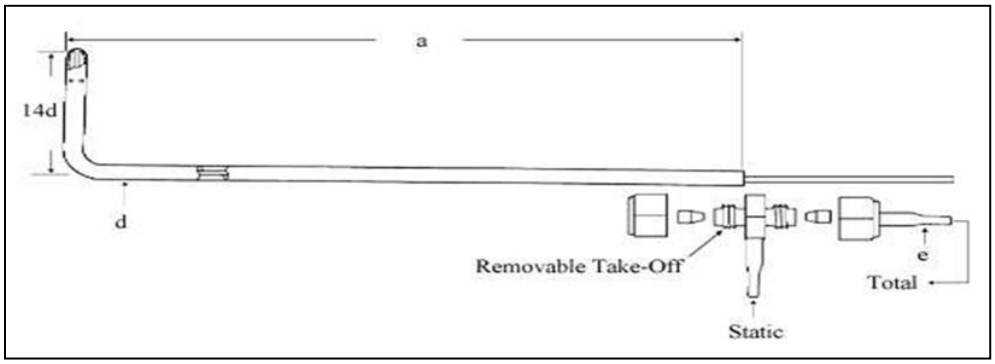

Figure 3-55. Type PC Probe

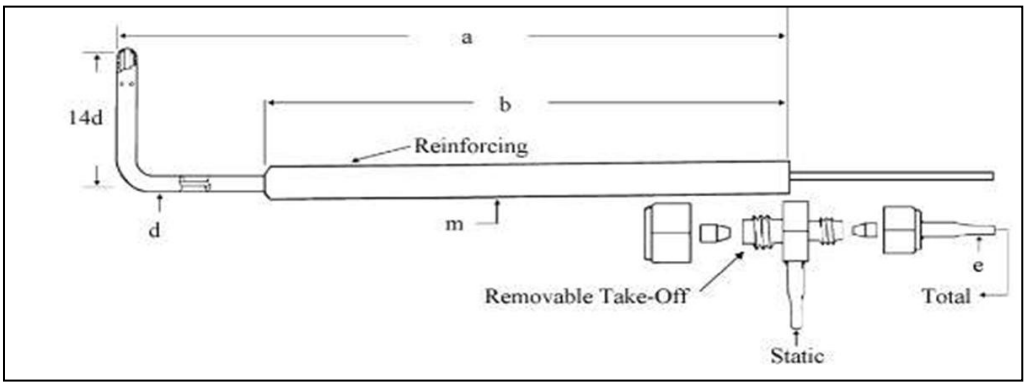

Figure 3-56. Type PD Probe

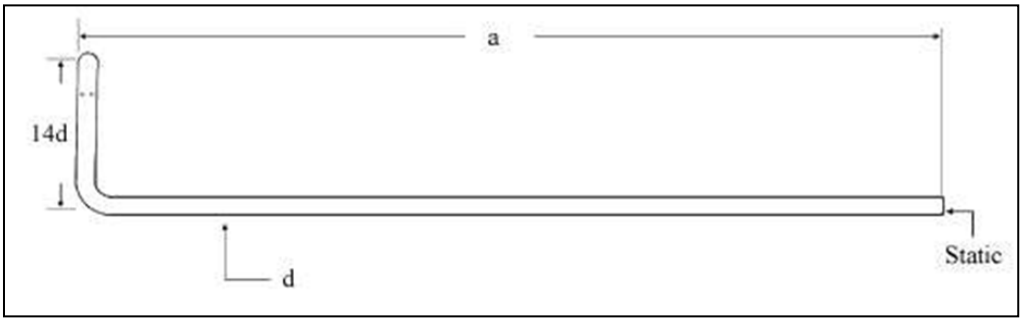

Figure 3-57. Type PS Probe

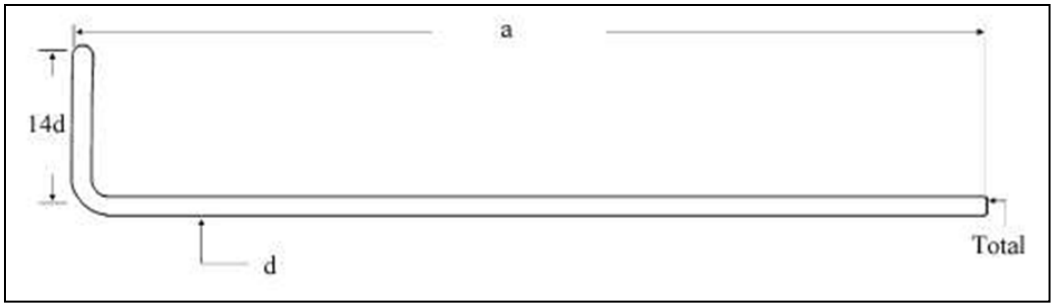

Figure 3-58. Type PT Probe

3.13.3 Transducers for Pitot-static systems

As mentioned before, pressure transducers are used to translate barometric Pitot-static air pressures into electrical signals. Pressure transducers typically are of two families: differential and absolute. Differential transducers accept two pressure inputs via separate ports applied to both sides of the pressure sensor, and provide an output proportional to the difference of the two pressures. Absolute sensors compare the sampled pressure to an aneroid - an evacuated or nitrogen-filled sealed containment. Differential transducers are used to provide a difference signal between the dynamic and static sources for airspeed calculations, while absolute sensors are used for altimeters and vertical speed calculations.

3.13.3.1 *Vibrating Element or Resonant Type*

This type of transducer typically takes two forms (see Figure 3-59). The first form is a vibrating wire driven by an electromagnetic source. The second form can be a resonant type, such as a PE ceramic or a quartz element, attached to a diaphragm. The diaphragm can be located either between the two pressure sources for differential sensors or between an aneroid and an external pressure source. A pressure-sensitive element (diaphragm or bellows) develops a force against a tensioned wire, a quartz crystal, or ceramic element whose natural mechanical frequency of vibration depends on the stress due to the force. As a result, the frequency is a function of pressure. The vibrations are maintained by a feedback loop with an amplifier in the loop.

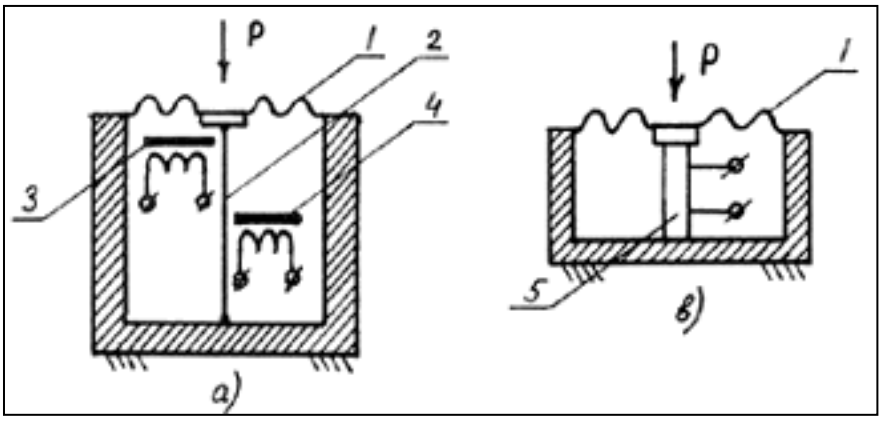

Figure 3-59. Vibrating Element Pressure Sensor Cross-Sectional Diagram

Pressure upon the vibrating element alters the resonant frequency of an oscillator, which is then used to provide an output signal proportional to the differential or absolute pressure.

Vibrating-element pressure transducers with pressure-sensitive element changing strain in vibrating wire (a) or quartz crystal (b). P = pressure, 1 = pressure-sensitive element, 2 = tensioned wire, 3 = pickup coil, 4 = driving magnetic system, 5 = quartz crystal or ceramic element.

The Rosemount air data transducer (ADT) measures static and impact pressures and provides digital outputs for static pressure, impact pressure, dynamic pressure, indicated airspeed, pressure altitude, and indicated Mach. The Rosemount ADT contains two high-accuracy digital sensor modules with each module utilizing a vibrating element. The outputs are digitized and digitally corrected to minimize temperature effects before pressure altitude, indicated airspeed, and Mach are calculated.

3.13.3.2 *Capacitive Type*

Capacitive sensors (no diagram available, but similar to the vibrating element construction) utilize the variation in capacitance caused by the flexure of thin diaphragms arranged as the plates of a capacitor. The capacitance changes as the spacing between the plates is altered by applied pressure. Applied pressure can be either differential (both sides of the diaphragm) or absolute (pressure applied to one side while the other side is sealed). The variable capacitance is again used as part of a frequency determining circuit of an mV whose frequency output is proportional to pressure.

3.13.3.3 *Solid-State Type*

The solid-state type of pressure sensors (Figure 3-60) use a diffused Si resistance element connected to a fully active measuring bridge. The Si element is combined with signal conditioning circuitry, often on the same integrated circuit. The piezoresistive effect causes element resistance to change proportionally with measured pressure, and the unbalanced bridge produces a differential output voltage that indicates system pressure. The external pressure can be applied to the passivated Si directly, or the Si-measuring cell is housed in an oil-filled chamber for hostile environments. A stainless steel diaphragm separates and protects the sensor from the medium.

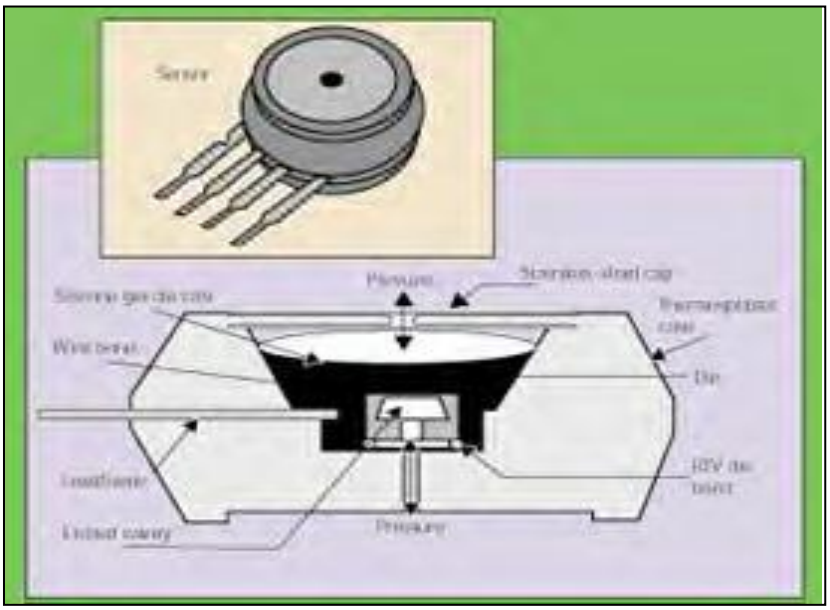

Figure 3-60. Solid-State Element Pressure Sensor Cross-Sectional Diagram

3.13.3.4 *Encoders*

Encoders are absolute pressure sensors integrated with signal conditioning and analog-to-digital conversion. The pressure sensor signals are calibrated to display altitude above sea level derived from the static pressure port. If the output is not displayed directly, these are often called "blind encoders." The digitized pressure output is supplied to non-direct display applications, such as navigation and flight management systems, for vertical navigation guidance, altitude alerts for altitude determination, autopilots for altitude hold functions, and transponders for telemetering of altitude to the air traffic control secondary radar tracking systems.

3.14 Aeronautical Radio, Incorporated 429

This section provides background, specifications, and other operational information relating to the Aeronautical Radio, Incorporated (ARINC) 429 waveform. This information is gleaned from "ARINC 429 Commentary"[8] published by SBS Technologies.

3.14.1 Background

ARINC itself is not a standard nor is it a piece of equipment. The ARINC organization is the technical, publishing, and administrative support arm for the Airlines Electronic Engineering Committee (AEEC) groups. The AEEC was formed in 1949 and is considered the leading international organization in the standardization of air transport avionics equipment and telecommunication systems. Standards from AEEC define avionics form, fit, function, and interfaces. The AEEC is comprised of 27 airline and related organizations. Representatives have engineering, operational, and maintenance experience within their organization.

ARINC specifications are divided into four numbering systems and two basic types. The numbering systems include the 400, 500, 600, and 700 series. The groups are divided into general design requirements and terminal design standards (characteristics). General design requirements include the 400 and 600 series of documents. Specific terminal design and testing criteria (characteristics) are set forth in the 500 and 700 series. The 400 series documents are considered the general design and supporting documents for the 500 series avionics equipment characteristics. The ARINC specifications define design and implementation of everything from testing requirements to navigation systems to in-flight entertainment. Some of the newer specifications cover digital systems, testing, and development and simulation criteria. Generally, three specifications define the characteristics of avionics buses. These are ARINC 419,[9] ARINC 429,[10] and ARINC 629.[11]

ARINC 419 is the oldest and is considered obsolete. The vast majority of avionics terminals employ the usage of ARINC 429 for their avionics bus. The predecessor of ARINC

---

[8] SBS Technologies, Inc. "ARINC 429 Commentary." Rescinded; available to RCC members with Private Portal access at https://wsdm.wsmr.army.mil/site/rccpri/Publications/121-13_Instrumentation%20Engineers%20Handbook/ARINC_429_Commentary.pdf.

[9] Aeronautical Radio, Incorporated. *Digital Data System Compendium*. ARINC Report 419-3. November 1984. Available for purchase at https://www.arinc.com/cf/store/catalog_detail.cfm?item_id=90.

[10] Aeronautical Radio, Incorporated. *Digital Information Transfer System (DITS) Parts 1-4*. ARINC Specification 429P1-P4. Available for purchase at https://www.arinc.com/cf/store/catalog.cfm?prod_group_id=1&category_group_id=1.

[11] Aeronautical Radio, Incorporated. *Multi-Transmitter Data Bus Parts 1 and 2*. ARINC Specification 629P1-5, 629P2-2. Available for purchase at https://www.arinc.com/cf/store/catalog.cfm?prod_group_id=1&category_group_id=3.

419 is a collection of the various avionics buses in use at its creation. The ARINC 419 specification was the first digital communications specification for commercial aviation. This specification was developed in 1966 and last updated in 1983. The ARINC 419 specification was created to provide a central point of reference for the different variations of buses, providing both electrical and protocol declarations. Although the 419 specification declares four different wire topologies and clock rates between transmitter and receiver, all buses use a shout bus topology (simplex) and the label identification method for data words (see Table 3-4).

Table 3-4. ARINC 419 Topologies

Topology	Description
Parallel	One Wire per Bit
Six Wire	One Clock, One Data, One Sync
Serial	One Twisted Pair
Serial	Coaxial Cable

Among the four, the most widely known implementation of 419 is the Serial: one twisted shielded pair topology used by the Digital Air Data System (DADS [known as ARINC 575], followed by the six-wire (three twisted shielded pairs). Although ARINC 419 is no longer used in terminal design and is considered obsolete, the DADS 575 twisted shielded pair bus served as the model for the ARINC 429 topology.

ARINC 429 defines the Air Transport Industry's standard for the transfer of digital data between avionics systems. The ARINC 429 specification is formally known as the MARK 33 Digital Information Transfer System (DITS) specification. The current release of the specification is known as ARINC 429-15 and is divided into three parts shown in Table 3-5).

Table 3-5. ARINC Specification Parts

Part	ARINC Specification	Description
1	429P1-18	Functional Description, Electrical Interface, Label Assignments, and Word formats
2	429P2-16	Discrete Word Data Formats
3	429P3-19	File Data Transfer Techniques

The ARINC 429 specification describes the avionics bus as an open-loop transmission model. Typically, this type of bus is described as a simplex bus with multiple receivers. Other terminology would refer to it as a "shout" or "broadcast" bus. When looking at a 429 bus, the transmitting line-replaceable unit (LRU) is known as the source while each receiving LRU is known as a sink. Any particular LRU may have multiple sources and/or sinks. A twisted shielded pair carries the ARINC 429 signal and the sets of information are transmitted at periodic intervals. The periodic interval of data transmission must be sufficient to provide a minimal rate of change in the data, so that if a data set were lost, the loss would be of little consequence. To detect errors, the specification prescribes the use of odd parity indication and optional error checking.

Typically, a data set is composed of one word and consists of either BNR, BCD, or alphanumeric data encoded per ISO Alphabet No. 5. The ARINC 429 specification also

provides for file data transfers that use more than one word. The transfer of graphic text and symbols used for CRT maps and other displays has not been defined. Documents for ARINC 429 are not standards; they are specifications developed to provide a high degree of interchangeability between common functional units.

3.14.2 ARINC 429P1-15 Specification

The ARINC 429 specification provides the electrical, timing, and protocol requirements necessary to implement design and proper communication on the MARK 33 DITS bus. The ARINC 429 topology is implemented as a simplex broadcast bus. The ARINC 429 wiring topology is based upon a 78 Ω, unbalanced, twisted shielded pair. An LRU is typically connected to the bus in a star or bus drop configuration (see below).

Each bus has only one transmitter and up to 20 receivers; however, one terminal may have many transmitters or receivers on different buses. The transmitter sends out the 32-bit word, least significant bit (LSB) first, over the wire pair in a tri-state clocking, return-to-zero (RZ) methodology. The actual transmission rate may be at the low or high speed of operation: Low speed of 12.5 kHz (12.5 kHz to 14.5 kHz) approximately 390 to 453 words per second and high speed of 100 kHz (±1%) approximately 3125 words per second. A receiver is not allowed to ever respond on the same bus where a transmission has occurred; however, since an LRU may have one or more transmitters and/or receivers (each being on a separate bus), an LRU may respond over another bus. An LRU on the ARINC 429 bus does not have an address. The LRUs have equipment numbers that are then further grouped into equipment/system types. Equipment and system identification numbers are used for system management and are not typically encoded into the ARINC Word. An LRU is programmed to listen on the bus for ARINC data words. Remember the data word begins with a label identifying data of interest.

Transmission of information occurs from a port on the LRU that is designated for transmission only. Similarly, receive ports are used for receive only. Information cannot flow into a port designated for transmission. This is the basic definition of a simplex bus. To obtain bi-directional dataflow between LRUs you must use at least two ARINC 429 buses.

3.14.3 Cabling

The transmission media for the ARINC 429 bus is a 78 Ω twisted shielded pair. A schematic illustration of a twisted pair appears in Figure 3-61.

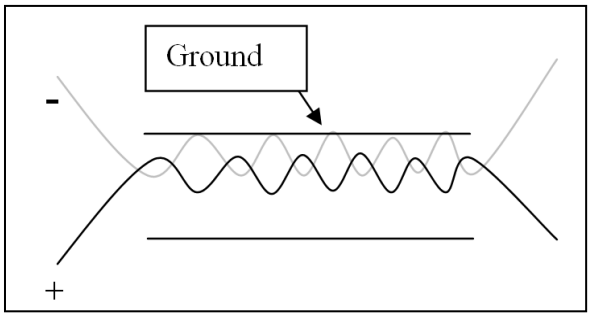

Figure 3-61. 429 Twisted Pair

One end of the twisted pair should terminate into the data source and the other end should terminate into the data sink(s). The shields should be grounded at both ends and at all production breaks in the cable. Only a single source is permitted per bus and a maximum number of 20 sinks may be connected. Either a star or line drop topology is permitted. A source must be

capable of handling a maximum load of 400 Ω. A receiver sink must have minimum effective input impedance of 8 kΩ with no particular bus lengths specified, partially due to the direct connect nature of bus and that each sink acts like an electrical drain. Most systems are designed for less than 175 feet.

The two types of topologies are the star and bus drop (Figure 3-62 and Figure 3-63, respectively). In earlier designs, especially, the star topology was implemented. Many consider star topology safe since each LRU has its own connection to the source; therefore, any break along the bus length results in loss of only one listener. The star topology, however, requires much more wire, which adds more weight and tends to create a "rat's nest" within harness areas. It is for this reason that many argue effectively for the bus drop topology. The same number of connections is still present and there is a significant reduction in weight from dropping each LRU off a central bus.

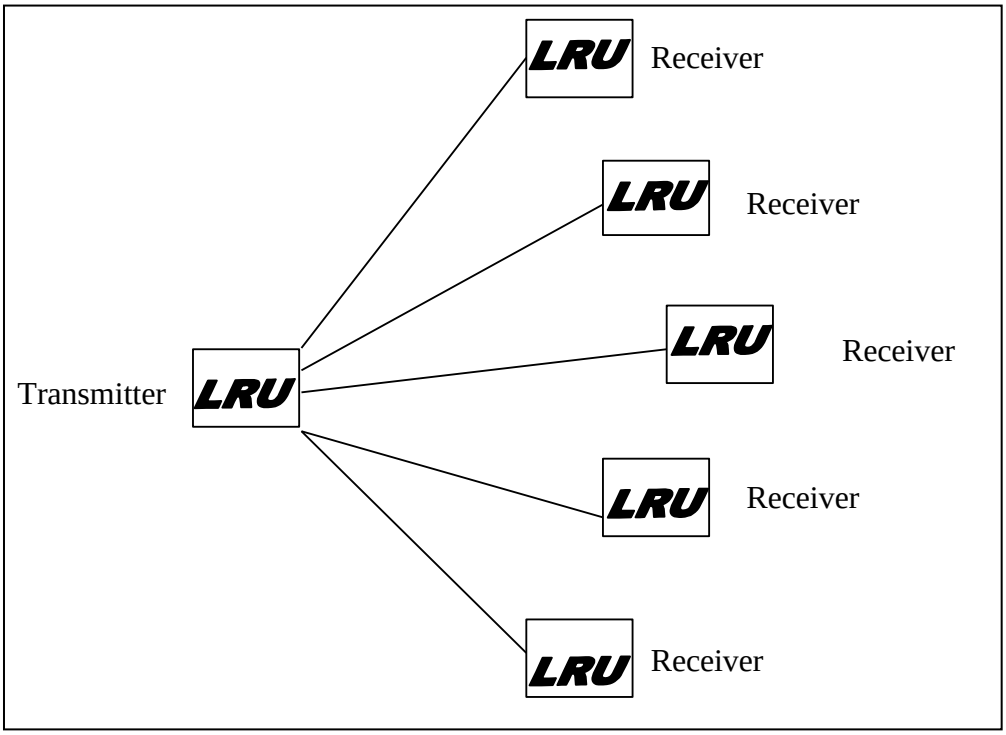

Figure 3-62. Star Topology

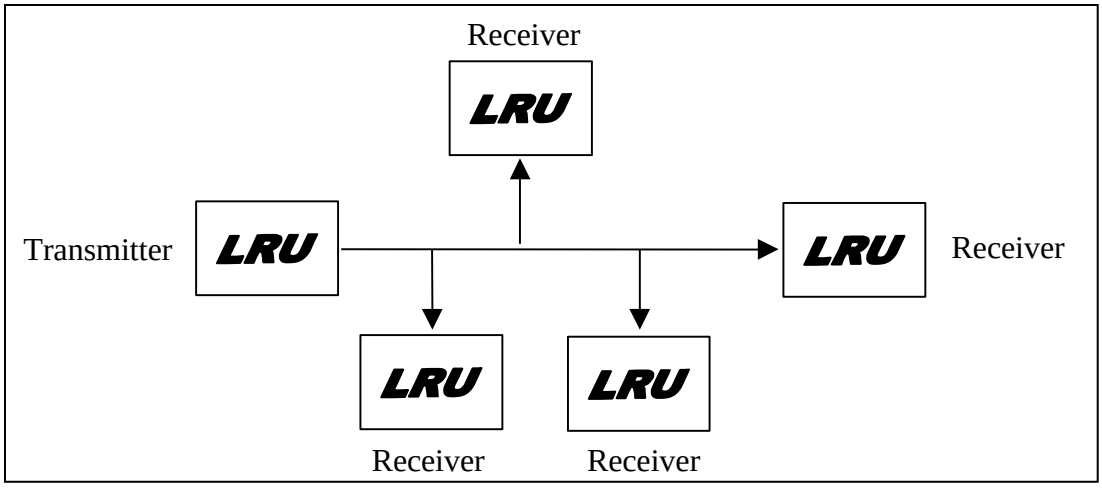

Figure 3-63. Bus Drop Topology

ARINC 429 has two speeds of operation: 12.5 kHz (12.5 kHz to 14.5 kHz) and 100 kHz (+/- 1%). The 32-bit word is transmitted LSB first over the wire pair with a tri-state clocking, RZ methodology. Separate words are identified by having an inter-message (or inter-word) gap time of at least 4 bit times, from end of cycle to beginning of next rise or fall time. A "one" is created by the transmitter when a rising edge goes from zero to 10 V +1 V, plateaus, then drops down to 0 V, which is known as the null area (null level +0.5 V). A "zero" is created by the transmitter when a falling edge drops from 0 V down to -10 V +1 V, plateaus then rises up to return to the null area. This is considered a complete cycle only when followed by a null area plateau. Every plateau should be of equal length.

The signal waveform generated is an RZ bipolar tri-state modulation. The three states are identified as "HI", "NULL" and "LOW". Figure 3-64 depicts each state and Table 3-6 identifies the output signal tolerances.

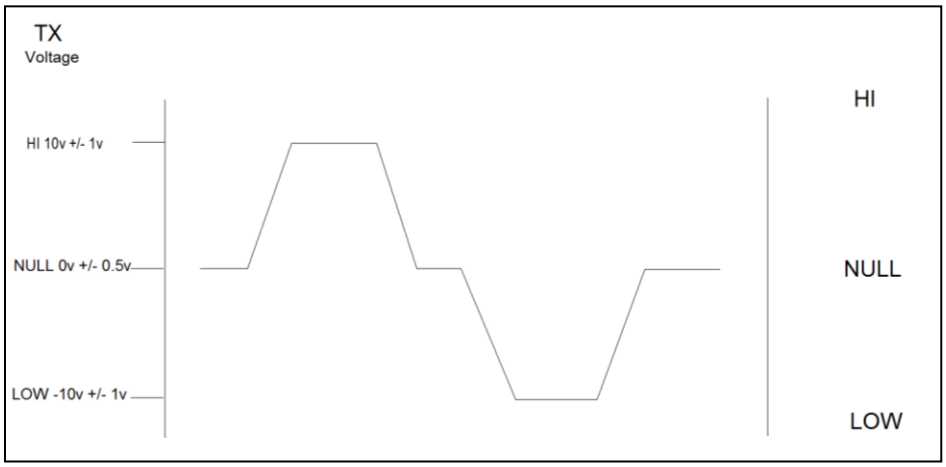

Figure 3-64. ARINC 429 Waveform

Table 3-6. Output Signal Tolerances

LTR	Parameter	High Speed	Low Speed

-	Bit Rate	100 thousand bits per second (kbps) +1%	12-14.5 kbps
A	1st Half Pulse	5 µs +5%	B/2 ±5%
B	Full Pulse Cycle 1	0 µs ±2.5%	Z* µs ±2.5%
C**	Pulse Rise Time	1.5 ±0.5 µs	10 ±5 µs
D**	Pulse Fall Time	1.5 ±0.5 µs	10 ±5 µs

Notes:
* Z = 1/Bit Rate; Bit Rate is the selected rate of transmission of 12 — 14.5 kbps

** The Pulse Rise (C) and Pulse Fall (D) times are measured between 10% and 90% amplitude.

3.14.4 Transmitter

The ARINC 429 waveform shows boundaries for both transmitter and receiver conditions. In order to create the wave, the transmitter needs to generate a differential output signal across the twisted pairs. The transmitter needs to be balanced to ground and should emit a differential signal as depicted on the left-hand side of the ARINC 429 waveform. The voltages depicted are when the transmitter line is at open circuit. The voltage scale on the left is the values that transmitters are expected to generate. Even though a valid signal should not exceed 13 V in either direction, a transmitter should be designed to prevent a voltage transmission in excess of 30 VAC across the wire pair and ±29 VDC from either wire to ground. Transmitters should be able to withstand indefinite shorts across the wire pair and/or to ground. Most ARINC 429 transmitters are designed using a resistor-capacitor (RC) circuit to control the rise time. This implementation is preferred in order to minimize overshoot ringing, typically associated with rapid rise times. The rise and fall times for the 10 kHz rate is 1.5 µs ±0.5 µs while the rise and fall times for the 12.5 kHz bus is 10 µs ±5 µs. The transmitter should exhibit continuous output impedance of 75 Ω ±5 Ω in a balanced fashion between each wire of the twisted pair. Cable impedance should be selected to match the 75 Ω transmitter requirement; however, actual values from 60-80 Ω fall within the expected characteristics.

3.14.5 Receiver

The voltage scale on the right of the ARINC 429 waveform in Figure 3-64 is the values for which receivers are expected to decode. Even though the receiver should not see amplitude any greater than ±13 VDC, each receiver should be designed to withstand steady-state voltages of 30 VAC RMS across the wire pair and ±29 VDC from either wire to ground. In proper decoding operations, the 429 specification declares the receiver's valid null area to be ±2.5 VDC, it is not uncommon to have receivers that have a null area up to ±3.5 VDC and will not decode a "one" or "zero" until the signal amplitude reaches +4.5 VDC or -4.5 VDC, respectively. These adjusted thresholds are typically implemented to overcome noise problems on the bus. On the other hand, the specification encourages designers to try a 1-V separation between decoding values. Most ARINC 429 receivers are designed around an operational amplifier matrix, which typically includes a clock speed identifier to establish timing requirements for differentiating high- and low-speed signals. The differential input resistance and resistance to ground of a

receiver should be no less than 12 kΩ, with a total input resistance no less than 8 kΩ. The differential input capacitance and capacitance to ground should not be greater than 50 picofarad.

3.14.6 Word overview

Each sink is programmed to look for only data relevant for its operation. Relevant data is identified by the first eight bits of the ARINC word, known as the label. Each ARINC 429 word (Table 3-7) consists of 32 bits with the first 8 bits (label) octally encoded to represent the type of information contained within the 32-bit word. A typical 32-bit word has five parts: 8-bit label, data area, odd parity bit, source/destination identifier (SDI), and sign/status matrix (SSM).

Table 3-7. ARINC 429 Word

P	SSM	Most Significant Data, 19 bits	SDI	8-Bit Octal Label
32	31 30	29 28 27 26 25 24 23 22 21 20 19 18 17 16 15 14 13 12 11	10 9	8 7 6 5 4 3 2 1
MSB		ARINC 429 Word		LSB

3.14.7 Information identifier

The information identifier (Table 3-8) is a term used in the specification to associate two different types of information (label and equipment identifier). The ARINC 429 specification defines these two together as a six-character label that provides distinct designation for any type of ARINC 429 data. This six-character label consists of a three-character octal identifier known as the label and a three-character hexadecimal identifier known as the equipment identifier. Table 3-8 is an example of the "Label Codes" table. The label identifies the type of information contained within BNR and BCD numeric and the word application for discrete, maintenance, and file transfer methods (also described in ARINC 429P2 and P3). Labels can have system instruction or data reporting functionality. The structure for assigning label numbers appears in ARINC 429P1 Appendix 5, "Guidelines for Label Assignments". The BNR representation of the octal label information and its bit position within the ARINC 429 data word is seen under the "Transmission Order Bit Position" heading of Table 3-8. The most significant bit (MSB) of the octal word is located in the least significant ARINC 429 bit and is transmitted first out onto the bus. Since the LSB of the ARINC word is transmitted first, this in effect causes the label to be transmitted onto the bus in reverse bit position order. The label is part of every ARINC 429 32-bit word and each word begins with a label. A label is always transmitted in the first 8 bits of the ARINC 429 word.

Table 3-8. Information Identifier

Code # (Octal)	Eqpt ID (Hex)	Transmission Order Bit Position in 429 Word			Parameters	Data	
		1 2	3 4 5	6 7 8		BNR	BCD
374	005	1 1	1 1 1	1 0 0	E-W Velocity — Mag	X	

3.14.8 Equipment identifier

The equipment identifier (Eqpt. ID) identifies the ARINC 429 bus source, is for administrative use, and must be associated with the source-sink combination. Each bus source

may have up to 255 of the labels, as defined above, assigned for its usage. Since each type of equipment (black box) has its own sets of labels (and data) and a distinct equipment identity, the ARINC designer can use the combination of the label and equipment identifier to prevent the conflict of unlike parameters having the same label. Many times this equipment identifier code identifies a system on the aircraft, such as the "Ground Proximity Warning System 023." The equipment identifier is not transmitted out onto a bus unless the label 377 is used. In association with that label, the number is encoded just following the SDI.

3.14.9 Source/destination identifier

The SDI is optional and, when used, occupies bits 9 and 10 of the ARINC word. The SDI is considered to add an extension onto the ARINC word's label and ARINC systems are expected to decode the label/SDI combination as a different label than an ARINC word with the same label and no SDI implementation.

The SDI has two functions as follows:

a. to identify which source of a multi-system installation is transmitting the data contained;
b. to direct which sinks (destination) on a multi-listener bus (known as a multi-system installation) should recognize the data contained within the ARINC word.

When used in the destination function, subsystems are given an installation number: 01, 10 or 11 (BNR). A zero in both bits 9 and 10 (00) conveys that all sinks on the bus should decode the data or can be used as the address for a fourth listener on the bus. As stated, the use of the SDI is optional and is not available if transmitting ISO Alphabet #5 alphanumeric data words or when additional bit resolution is needed for BNR or BCD numeric data (data requiring a higher resolution than typically provided with the 19 data bits).

3.14.10 Sign/status matrix

The SSM field may be used to report equipment conditions or the sign (+, -, north, south, east, west, etc.). Bits 30 and 31 are typically assigned to the SSM with bit position 29 also used for BNR words. In the status function, the SSM field reports hardware equipment conditions (fault/normal), operation mode (functional test) or validity of data word content (verified/no computed data).

The SSM is used for two purposes:

a. to provide a sign or direction indicator for data contained within the ARINC 429 word;
b. to provide source equipment status information as related to the data word for the sinks. Each label has its own unique implementation of the SSM function.

When used to provide equipment status information the SSM reports three general conditions:

a. report hardware equipment condition (fault/normal);
b. operational Mode (functional test);
c. validity of data word contents (verified/no computed data).

Other bit settings within the data word or data within the ARINC word indicating the type of status or related values may also accompany status information. This additional information would be specific for each system. The following is valid for BCD, BNR, and discrete data words. Functional test status encoding is used with instruction labels and data reporting labels. When an ARINC word has an instruction label and is accompanied by the functional test being set, the decoding sink should interpret the instruction as a command to exercise a functional test. When the ARINC word has a data-reporting label and the functional test is set, the data contained within are the results of a functional test. Typical BCD test report data has values of 1/8th of full scale (FS), unless otherwise defined.

3.14.11 Protocol

Most ARINC 429 data is transmitted integrally as part of the labeled word (i.e., BNR, BCD, and alphanumeric); however, a combination of 32-bit words may also be used in a block transfer (i.e., AIM) mode. The AIM block transfer protocol (now discontinued) was the original manner defined for data block transfer, being replaced with the Williamsburg file transfer protocol, as introduced in ARINC 429-12. Each LRU has a transmit bus and a receive bus and a control protocol is implemented to manage the data transfer. In addition, these buses are point-to-point and are typically designed with the ability to perform under typical 429 single-word-transfer format. An ARINC 429 data word has a predefined rate at which it must be retransmitted. The exact data may or may not be repeated. Most systems require data to be transmitted at the predefined transmission repeat interval whether the data has changed or not. Each label has a minimum and maximum transmit interval that has been predefined. A label's rate and interval are defined in the ARINC 429 specification or in a specification by another governing body (i.e., General Aviation Manufacturers Association) or by a particular avionics system supplier.

3.15 Military Standard 1553

The MIL-STD-1553 is a military standard that defines the electrical, mechanical, and timing specifications for a communication network that interconnects cooperating digital units in a system. This communication network, also referred to as a data bus, is typically used in military and commercial platforms utilizing an avionics system. The MIL-STD-1553 is a highly reliable bus, both because of its extremely low error rate (one word fault per 10 million words), and because of its implemented dual-redundant architecture. The bus operates at 1 megabit per second (Mbps).

The MIL-STD-1553, "Aircraft Internal Time-Division Command/Response Multiplex Data Bus," has been in use since 1973. The MIL-STD-1553 is referred to as "1553" with the appropriate revision letter (A or B) as a suffix. The basic difference between the 1553A and the 1553B is that in the 1553B, the options are defined rather than being left for the user to define as required. It was found that when the standard did not define an item, there was no coordination in its use. Hardware and software had to be redesigned for each new application. The primary goal of the 1553B was to provide flexibility without creating new designs for each new user. This was accomplished by specifying the electrical interfaces explicitly so that compatibility between designs by different manufacturers could be electrically interchangeable. The MIL-STD-1553B was widely adopted in 1978. It should be noted that 1553 bus wiring and bus coupling will differ between 1553A and 1553B specification buses. Paragraph 3.15.3 contains a review of the 1553A vs. 1553B specification hardware differences.

The DoD chose 1553 multiplexing because of the following advantages:

a. weight reduction;

b. simplicity;

c. standardization;

d. flexibility.

Some 1553 applications utilize more than one data bus on a vehicle. This is often done, for example, to isolate a weapons store bus from a communications bus or to construct a bus system capable of interconnecting more terminals than a single bus could accommodate. When multiple buses are used, some terminals may connect to both buses allowing for communication between them.

3.15.1 Specifics

The MIL-STD-1553B data bus interconnects up to 31 RTs controlled by a single controller unit referred to as the bus controller (BC). The RTs and the BC are connected using two separate buses of twisted-shielded pairs of wires to maintain message integrity. These are named the Primary Bus (or bus 'A') and the Secondary Bus (bus 'B'). Messages are transferred on both the primary and secondary buses with equal probability. If a message fails to be transferred over one bus, the transfer is retried on the other bus. Messages will continue to be transferred on this bus until a message failure occurs. At this time, the other bus is used for signaling.

There are only three functional modes of terminals allowed on the data bus: the BC, the bus monitor (BM), and the RT. These devices, which may be capable of more than one function, are described below.

a. Bus controller. The BC is the only terminal that initiates information transfers on the data bus. It sends commands to the RTs, which reply with a response. The bus will support multiple controllers, but only one may be active at a time. Other requirements, according to 1553, are: (1) it is "the key part of the data bus system", and (2) "the sole control of information transmission on the bus shall reside with the bus controller." The role of the BC is typically assigned to one of the more powerful units on the bus (e.g., the mission computer). In a typical MIL-STD-1553 bus, the BC has a predefined sequence of messages that it repeats indefinitely. This sequence of messages is referred to as a Bus List. The bus list is planned in such a way that it will cause each message to be transferred over the bus at a rate that is appropriate for the information that it carries. For example, a message that carries information about wing vibrations is transferred at a significantly larger number of Hz, than a message that carries information about fuel quantity.

b. Bus monitor. 1553 defines the bus monitor as "the terminal assigned the task of receiving bus traffic and extracting selected information to be used at a later time." Bus monitors are frequently used for capturing the entire bus or selected information for instrumentation purposes.

c. Remote terminal. Any terminal not operating in either the BC or bus monitor mode is operating in the RT mode. The RTs are the largest group of bus components. An RT is

usually a single box that has some information to send out, and needs other information to be sent in. (A sensory unit, for example, would only need to send data out, while a fuel control unit would need to transfer data in and out.). An RT can send out up to 30 different messages (numbered 1 through 30), and receive up to 30 other messages (also numbered 1 through 30). The number of the message in an RT is referred to as a sub address. Each message can hold between 1 and 32 data words, 16 bits per word. An RT sends or receives data only when instructed to do so by the BC.

The BC can transfer four basic kinds of messages over the bus (Figure 3-65).

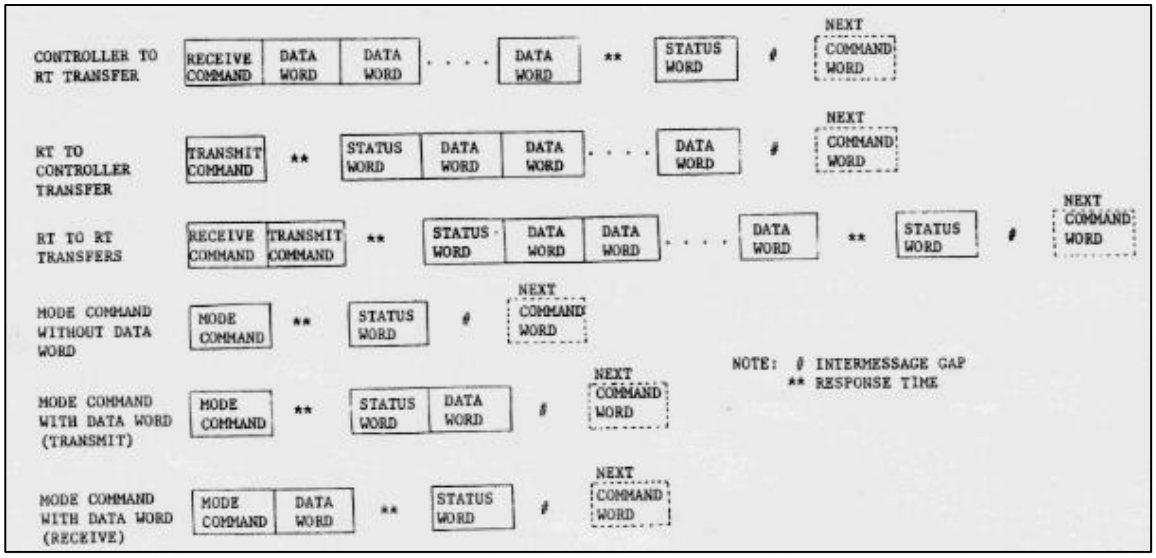

Figure 3-65. Information Transfer Formats

The kinds of messages used by the BC include RT to RT, RT to BC, BC to RT, and Mode commands. Each type is described below.

a. RT to RT message. The BC instructs one RT to be prepared to receive a certain number of words into one of its sub addresses, and then instructs another RT to send that number of data words from one of its sub addresses. Each RT is independent of the other. All they concern themselves with are commands from the BC.

b. RT to BC message. The BC instructs an RT to transmit a certain number of data words from one of its sub addresses, and then reads the data words that the RT transmits.

c. BC to RT message. The BC instructs an RT to be prepared to receive a certain number of data words, and then transmits that number of data words to the RT.

   (1) A unique subset to the BC to RT message is the Broadcast Message. When the BC sends out a command word with RT 31, then all RTs become prepared to receive the data words that follow. None of the RTs responds with a status word to avoid collisions.

   (2) Mode Command messages are used for management of the bus. They include a variety of messages, including, for example, requests from an RT to shut down its transmitter, or to send the results of the last built-in-test that it performed. Mode command messages are short, and contain one or no data words.

These signals are transferred over the data bus using serial digital PCM. It is encoded as Manchester II bi-phase, which breaks down as shown in Figure 3-66.

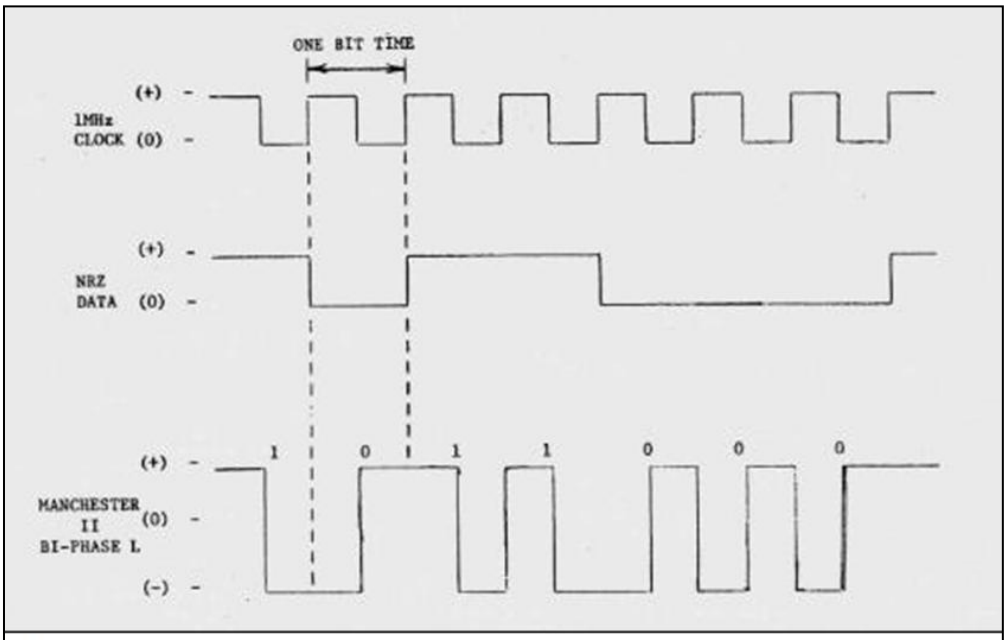

Notes:

1. A logic one (1) is transmitted as a bipolar coded signal 1/0 (in other words, a positive pulse followed by a negative pulse).
2. A logic zero (0) is a bipolar coded signal 0/1 (a negative pulse followed by a positive pulse).
3. A transition through zero occurs at the midpoint of each bit, whether the rate is a logic one or a logic zero.

Figure 3-66. Data Encoding

There are three types of words in MIL-STD-1553: Command, Status, and Data (see Figure 3-67). A word is a sequence of 20 bits consisting of a 3-bit synchronizer waveform, 16 bits of data, and 1 parity check bit. This is the word as it is transmitted on the bus; 1553 terminals add the sync and parity before transmission and remove them during reception. Therefore, the nominal word size is 16 bits, with the MSB first. This sync pattern distinguishes between data words (words that carry pure data) and command and status words (non-data words). The bit transmission rate on the bus is 1.0 Mbps with a combined accuracy and long-term stability of +0.1%. The short-term stability is less than 0.01%. There are 20, 1-μs bit times allocated for each word.

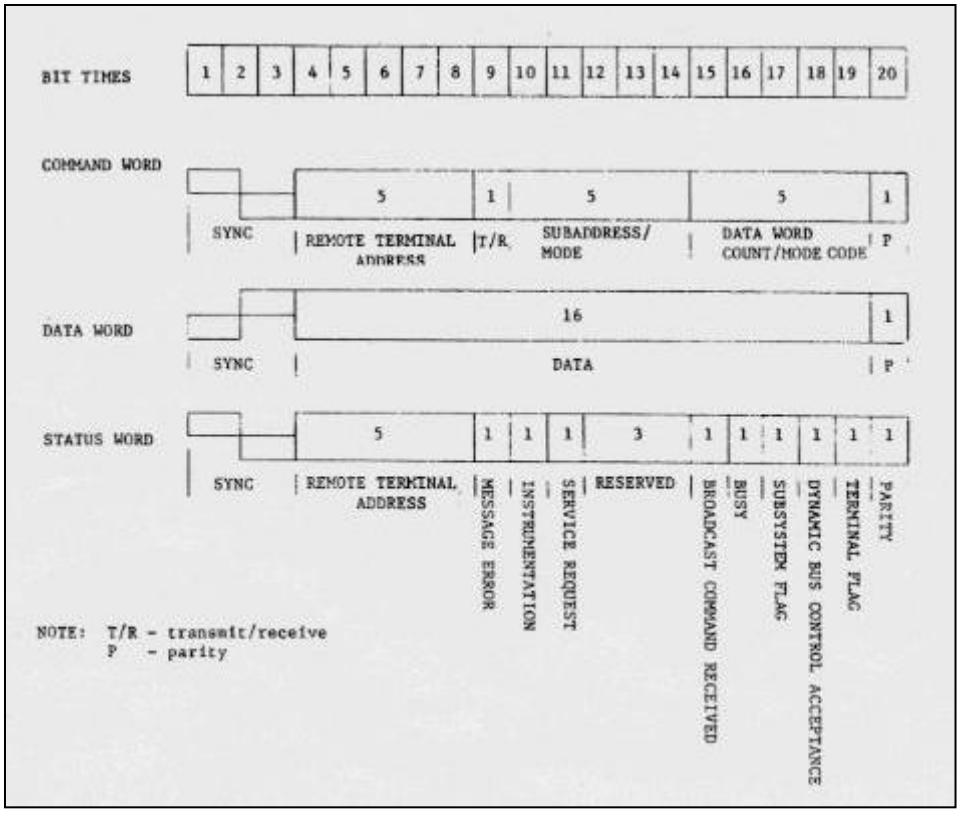

Figure 3-67. Word Formats

Command words are only transmitted by the BC and they always consist of:

a. 3 bit-time sync pattern;

b. 5 bit RT address field;

c. 1 Transmit/Receive field;

d. 5 bit sub-address/mode field;

e. 5 bit word count/mode code field;

f. 1 parity check bit.

Data words are transmitted either by the BC or by the RT in response to a BC request. The standard allows a maximum of 32 data words to be sent in a packet with a command word before a status response must be returned. Data words always consist of:

a. 3 bit-time sync pattern (opposite in polarity from command and status words);

b. 16 bit data field;

c. 1 parity check bit.

Status words are transmitted by the RT, in response to command messages from the BC, and consist of:

a. 3 bit-time sync pattern (same as for a command word);

b. 5 bit address of the responding RT;

c. 11 bit status field;

d. 1 parity check bit.

The 11 bits in the status field are used to notify the BC of the operating condition of the RT and subsystem.

Many different kinds of errors might occur on a MIL-STD-1553 bus. Some are related to electrical or magnetic conditions, and some relate to functional conditions of units on the bus. In general, there are two main groups of errors:

a. errors reported by an RT;

b. errors detected by the BC.

An RT can report an error by setting the Message Error bit in the status word that it sends back to the BC. Other kinds of errors involve bit-level errors and word-level errors. Bit-level errors relate to the bit pattern transmitted on the bus. The BC flags an error if it detects an illegal sync pattern, or when it detects a parity error. It also flags an error if it detects that a transmitted word contains too few or too many bits. Word-level errors relate to the transmission of complete words on the bus. The BC flags an error if it detects an illegal gap between successive words, or if too many or too few data words are transmitted (according to the number of words indicated in the command word). Finally, there are RT-level errors. The BC might detect that an RT is not responding at all, or that whenever the RT responds it causes corruption of the bus (The BC has the option of shutting off transmission of an RT, by sending the RT a Selected Transmitter Shut Down mode command.).

Because MIL-STD-1553 can be implemented as a dual-redundant bus, the occurrence of errors is when redundancy comes into play. Depending on the strategy that the designer of the BC has defined, whenever the BC detects an error during a message transfer, the BC has the following options:

a. to try to retransmit the message on the same bus (primary bus or bus ‘A’);

b. to try to retransmit the message on the other bus (secondary bus or bus ‘B’);

c. to ignore the error and move on to the next message.

Typically, there would be a limit to the number of retries. It is undesirable to retry more than just a few times, as this would stretch the bus list and cause delays in the transmission of other messages.

The MIL-STD-1553 does not specify the internal formatting of data in transferred messages. In MIL-STD-1553, data in each message is dependent on the system architecture. The various RT numbers and sub-addresses that are used are specific to the test platform. A defining document normally exists to provide detailed information at a system level on all the MIL-STD-1553 bus traffic managed by the BC. This document defines every message that the

BC should transfer over the bus. The precise contents of a message and each data field in the message are defined. It also identifies where each data field resides (i.e., in which word and bit[s]), the nature of data in the field, and other information used to convert the data into an engineering-units value. Each RT will have a dedicated ICD that defines all the interfaces to the RT including the detailed 1553 information.

3.15.2 Physical connection to the 1553 bus

When connecting to the 1553 bus, you MUST ensure the instrumentation system is properly isolated from the aircraft production 1553 bus.

3.15.2.1 *Transformer coupled stubs*

The length of the 1553 cable from the pick-up point to the instrumentation system shall not exceed 20 ft (Figure 3-68).

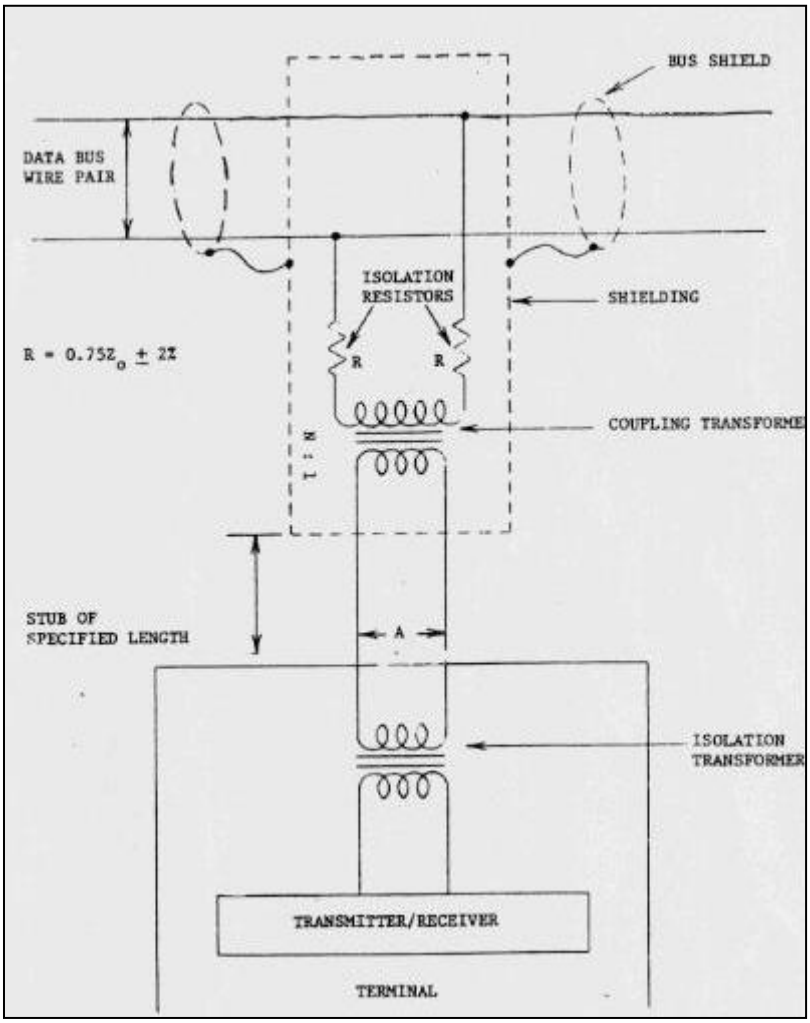

Figure 3-68. Transformer Bus Coupling

3.15.2.2 *Direct coupled stubs*

The length of the 1553 cable from the pick-up point to the instrumentation system should not exceed 1 ft (Figure 3-69).

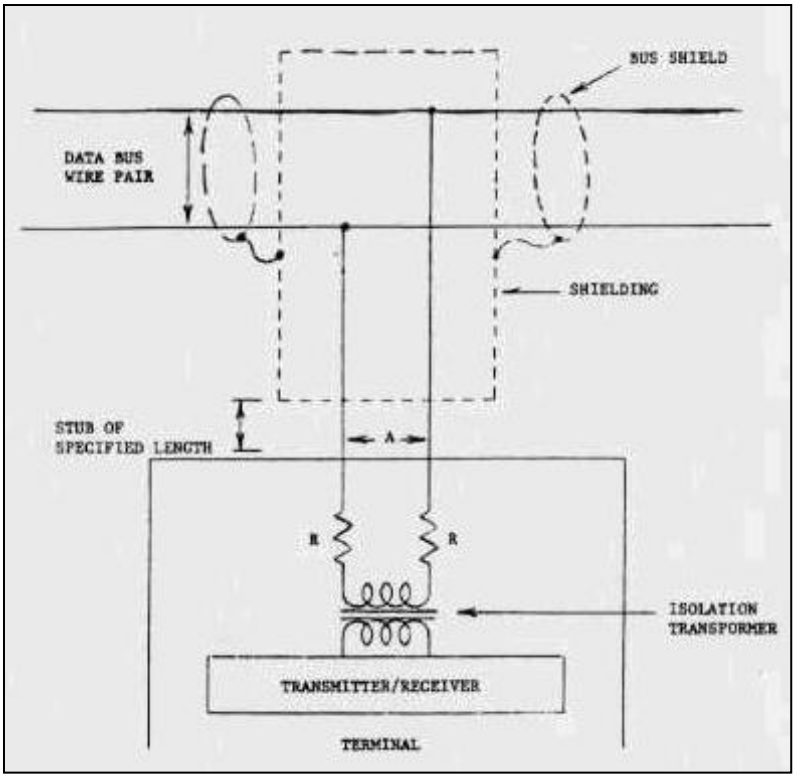

Figure 3-69. Direct Bus Coupling

3.15.3 <u>1553A versus 1553B specification differences</u>

It is important to note that most 1553 applications used today utilize the 1553B specification; however, some older test platforms utilize a mix of 1553A and 1553B specifications (see Table 3-9). It is very important that the specification being used is known when selecting 1553 cable and bus couplers. Using the wrong bus cable or bus coupler will result in reflections on the transmission line. The signal distortion will cause the bus to operate intermittently or cease operation.

Table 3-9. Specification Differences

Parameter	1553A Spec	1553B Spec
Cable Characteristic Impedance (Zo)	70 Ω	70 – 85 Ω
Fault Isolation Resistors	0.75 Zo, typically use 54 Ω	0.75 Zo, typically use 59 Ω
Transformer Turns Ratio	1:1	1:1.41

3.16 Serial Communications

Serial communication is a very common device communication protocol that is standard on almost every personal computer (PC). Most computers include two RS-232 (originally adopted in 1960 by the Electronic Industries Association)-based serial ports. Serial is also a common communication protocol that is used by many devices for instrumentation. Numerous general-purpose interface bus-compatible devices also come with an RS-232 port. Furthermore,

serial communication can be used for data acquisition in conjunction with a remote sampling device. Because of improvements in line drivers and cables, applications often increase the performance of RS-232 beyond the distance and speed listed in the standard. RS-232 is limited to point-to-point connections between PC serial ports and devices. RS-232 hardware can be used for serial communication up to distances of 50 feet.

3.16.1 Concept behind serial communications

The concept behind serial communications is that data is transferred from sender to receiver one bit at a time through a single line or circuit. The serial port takes 8, 16, or 32 parallel bits from your computer bus and converts it as an 8-, 16-, or 32-bit serial stream. The name serial communications comes from this fact; each bit of information is transferred in series from one location to another. Although this is slower than parallel communication, which allows the transmission of an entire byte at once, it is simpler and can be used over longer distances. In theory, a serial link would only need two wires, a signal line and a ground, to move the serial signal from one location to another; however, in practice this theory does not really work, some bits might get lost in the signal and thus altering the ending result. If one bit is missing at the receiving end, all succeeding bits are shifted, resulting in incorrect data when converted back to a parallel signal. So to establish reliable serial communications you must overcome these bit errors that can emerge in many different forms.

3.16.2 Serial bit error correction methods

Two serial transmission methods are used that correct serial bit errors are briefly described below.

3.16.2.1 *Synchronous communication*

The sending and receiving ends of the communication are synchronized using a clock that precisely times the period separating each bit. By checking the clock, the receiving end can determine if a bit is missing or if an extra bit (usually electrically induced) has been introduced in the stream.

3.16.2.2 *Asynchronous communication*

This method (used in PCs) is to add markers within the bit stream to help track of each data bit. By introducing a start bit that indicates the start of a short data stream, the position of each bit can be determined by timing the bits at regular intervals. By sending start bits in front of each 8 bit stream, the two systems don't have to be synchronized by a clock signal. The only important issue is that both systems must be set at the same port speed. When the receiving end of the communication receives the start bit, it starts a short-term timer. By keeping streams short, there is not enough time for the timer to get out of synchronization. This method is known as asynchronous communication because the sending and receiving ends of the communication are not precisely synchronized with a signal line.

Each stream of bits is broken up in 5 to 8 bits called words. The PC environment usually includes 7-bit or 8-bit words. The 7-bit word is to accommodate all upper- and lower-case text characters in American Standard Code for Information Interchange codes (the 127 characters). The 8-bit word is used to exactly correspond to one byte. By convention, the LSB of the word is sent first and the MSB is sent last. When communicating the sender encodes each word by adding a start bit in front and 1 or 2 stop bits at the end. Sometimes, as a data integrity check, a parity bit is added between the last bit and the first stop bit of the word. This is often referred to as a data frame.

Parity bits are not required, thereby eliminating 1 bit in each frame; this type of frame is often referred to as a non-parity bit frame; however, there are four other parity bit options available for use. The mark parity bit is always set at a logical 1. The space parity bit is always set at a logical 0. The even parity bit is set to logical 1 whenever the total number of bits in the data word plus the odd parity bit is even. The odd parity bit is set to logical 1 whenever the total number of bits in the data word plus the odd parity bit is odd. The latter two methods offer a means of detecting bit-level transmission errors.

In Figure 3-70, you can see how the data frame is composed of and synchronized with the clock signal. This example uses an 8-bit word with even parity and 1 stop bit, also referred to as an 8E1 setting.

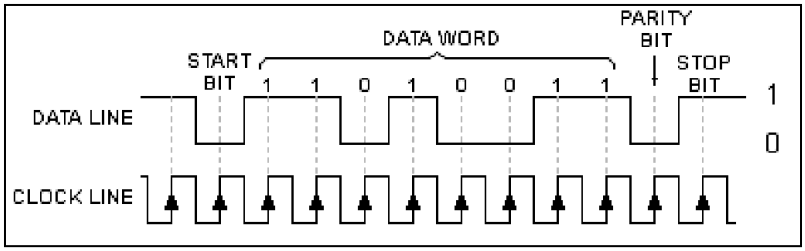

Figure 3-70. Asynchronous Serial Data Frame (8E1)

3.16.3 Communications Terminology

Some of the common terms are defined below.

a. Simplex. Simplex communications can be viewed as a one-way street. Data only flows in one direction. That is to say, a device can be a receiver or a transmitter exclusively. A simplex device is not a transceiver. A good example of simplex communications is an FM radio station and your car radio. Information flows only in one direction where the radio station is the transmitter and the receiver is your car radio.

b. Duplex. Duplex communications overcome the limits of Simplex communications by allowing the devices to act as transceivers. Duplex communication data flows in both directions, thereby allowing verification and control of data reception/transmission. Exactly when data flows bi-directionally further defines duplex communications.

c. Full Duplex. Full duplex devices can transmit and receive data at the same time. RS-232 is a fine example of full duplex communications. There are separate transmit and receive signal lines that allow data to flow in both directions simultaneously. RS-422 devices also operate full duplex.

d. Half duplex. Half duplex devices have the dubious honor of allowing both transmission and receiving, but not at the same time. Essentially only one device can transmit at a time while all other half duplex devices receive. Devices operate as transceivers, but not simultaneous transmit and receive. RS-485 operates in a half duplex manner.

e. Baud rate. Baud rate is a measure of the number of times each second a signal in a communications channel varies, or makes a transition between states (states being frequencies, voltage levels, or phase angles). One baud is one such change. Thus, a 300-baud modem's signal changes state 300 times each second, while a 600-baud modem's

signal changes state 600 times each second. This does not necessarily mean that a 300-baud and a 600-baud modem transmit 300 and 600 bits per second (bps).

3.17 RS-422

RS-422 is an industry standard specifying the electrical characteristics of a balanced interface circuit. The RS-422 standard was developed to overcome limitations with single-ended communications, such as RS-232. Advantages include increased cable length, higher data rates, and improved noise reduction. RS-422 is ideal for noisy environments due to its common-mode noise rejection capability.

RS-422 can be used for point-to-point (one driver, one receiver) or multi-drop (one driver, multiple receivers) operations. A daisy chain interface is recommended for multi-drop configurations. A receiver has a unit load of a maximum of 4 k Ω. An RS-422 driver can drive up to ten unit loads. The maximum cable length is 4000 feet and the maximum data rate is 10 Mb/s, although not simultaneously. Cable length and data rate have an inverse affect on each other. See Figure 3-71 for a graph of cable length versus data rate. The operating region for RS-232 is included to show a comparison of the two standards.

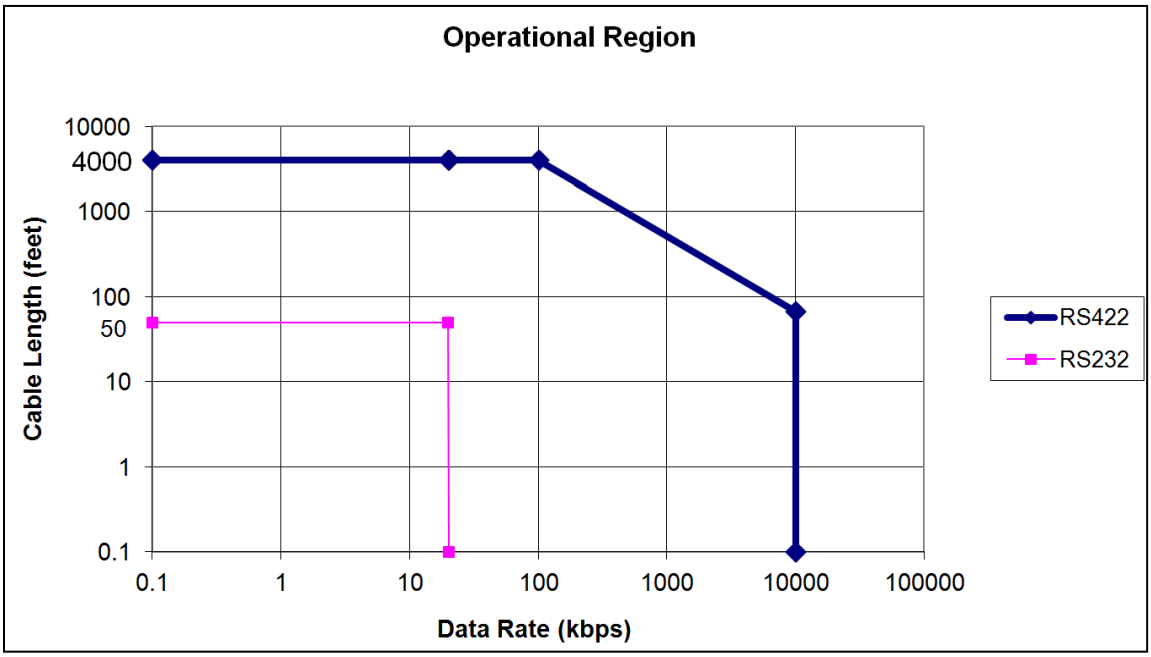

Figure 3-71. Cable Length Versus Data Rate

At long distances or high data rates, termination is recommended to reduce reflections caused by a mismatch in the impedance of the cable and the impedance of the receiver's input. Care should be taken when terminating a system because it may affect the network's failsafe capability. Failsafe is the ability to output a known value for an open, terminated, or shorted input. Any circuitry added to the network for termination may diminish the failsafe capability of the system.

Of course, an unterminated network is the most cost-effective solution. Because the driver's worst-case load is the receiver's minimum input resistance (4 kΩ), the driver is only

required to source a minimal amount of current in order to drive a signal to the receiver, diminishing the driver's on chip power dissipation. The higher driver output swing increases the DC noise margin, diminishing the possibility that system noise will improperly switch the receiver. The receiver output is in a known logic state when the transmission line is in the idle or open state. The most significant disadvantage with an unterminated cable is the introduction of signal reflections onto the transmission line. To limit the effect of these reflections, unterminated signals should only be used in applications with low data rates and short driving distances.

If termination is required due to longer cable lengths or higher data rates, several techniques can be used. One of the most popular techniques is parallel termination because transmission line effects are minimized. Parallel termination uses a resistor (Rt) across the differential lines at the receiver end of the transmission line to eliminate all reflections. The termination resistor is typically chosen to be equal to the characteristic impedance (Zo) of the transmission line. The cable impedance can be obtained from the cable manufacturer or may be measured using time domain reflectometer techniques.

3.18 Gyroscopes

Gyroscopes have been used for decades to determine pitch, roll, and yaw angles and angular rates of test articles. Historically, simple attitude gyroscopes were predominantly constructed as illustrated in Figure 3-72.

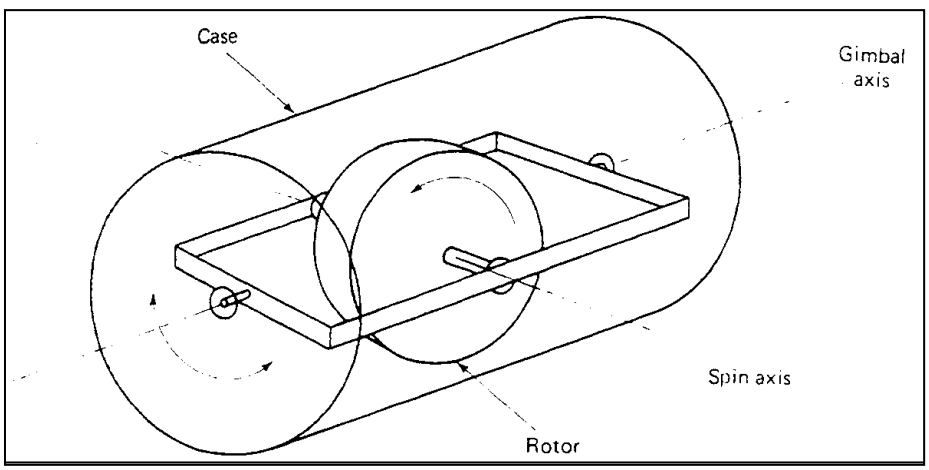

Figure 3-72. Basic Gyroscope

The spinning mass (rotor) will tend to keep the rotating frame (gimbal) to which it is attached fixed in place as the outside case is rotated. By putting a transduction element (such as a potentiometer or synchro) between the gimbal shaft and outside case, angular displacement can be determined from this single degree-of-freedom gyroscope. It can be mounted in any orientation to yield pitch, roll, or yaw angle. The so-called “vertical gyroscope” is a two-degree-of-freedom unit that is constructed with two gimbal assemblies, inner and outer, to yield pitch and roll angles from a single gyroscope assembly.

With the addition of restraining springs on the gimbal assembly, a basic-rate gyroscope can be constructed as shown in Figure 3-73. The angular deflection of the gimbal shaft with

respect to the rest (or zero rate input) state is directly proportional to the angular rate input perpendicular to the spin axis of the rotor.

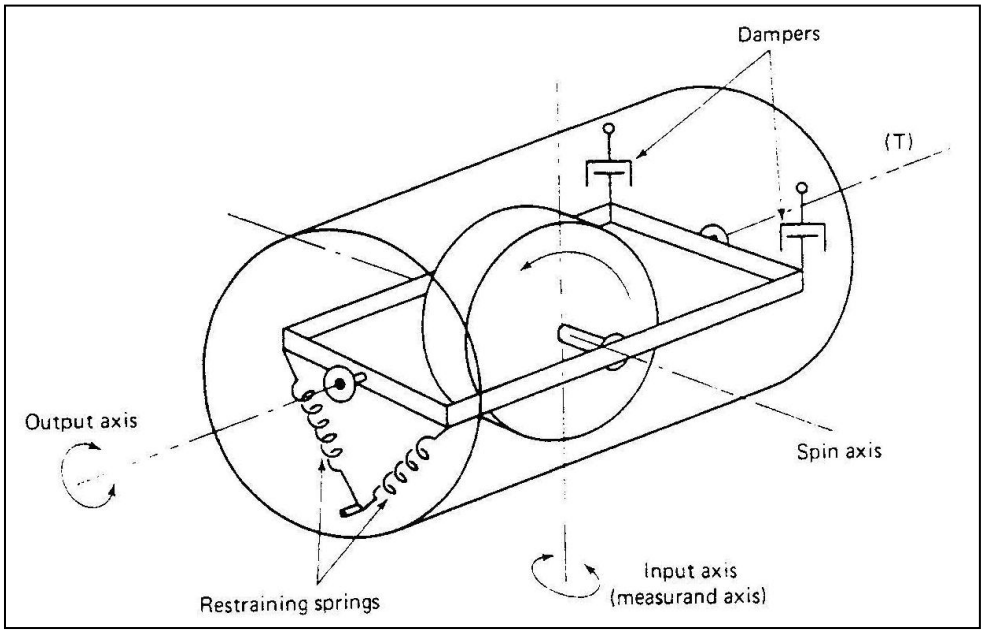

Figure 3-73. Basic Rate Gyroscope

The angular momentum of the gyroscope rotor directly relates to the stability of the gyroscope. Angular momentum is the product of rotor angular velocity and the moment of inertia of the rotor. Therefore, a stable gyroscope should have a fairly massive rotor that can spin at a relatively high velocity. These are design criteria that dictate characteristics such as size, weight, and spin motor characteristics. Although some are still in use, these devices tend to be rather large and heavy by today's standards. In addition, since these are electromechanical devices, with bearings, springs, etc., they do require periodic maintenance and have a limited operating life. These devices require 28 VDC or 400 Hz 115 VAC, primarily for the spin motors. Their outputs are usually hi-level analog for the DC-powered types; synchro output is typical for the AC-powered versions.

Around 1970, the ring laser gyro was developed as an attempt to overcome the limitations of the electromechanical gyroscope (Figure 3-74). The spinning mass rotor is replaced by a pair of laser light beams that travel in a ring internally in opposite directions. Over time, this design evolved into a triangular configuration with three mirrors. A slight frequency shift occurs between the two traveling light beams in proportion to an input rate perpendicular to the light path traveled. This frequency difference is sensed by a photodetector as a series of interferometric light fringes. The resulting fringe count implies that the output of a ring laser gyroscope is inherently digital in nature. Most were designed for using a 28 VDC power supply.

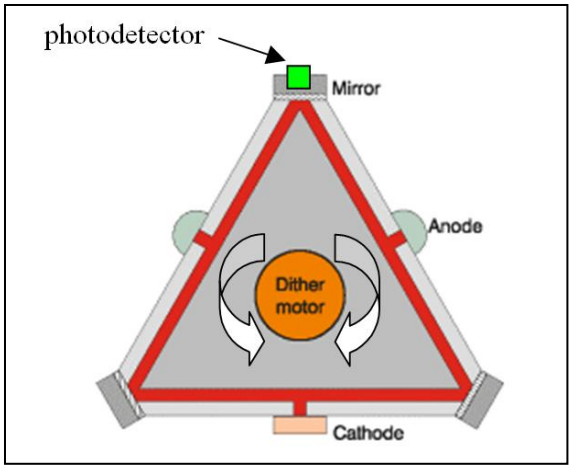

Figure 3-74. Ring Laser Gyroscope

In the 1980s, the fiber optic gyroscope was invented. It works in a similar fashion to the ring laser gyroscope, but is smaller, lighter, and requires less power. A very long coil of optical fiber (1-5 km) provides the media through which two counter-propagating light beams travel. As the gyroscope is subjected to an angular rate, a slight change in path length occurs between the two light beams. One beam travels a slightly shorter distance, and the other travels a slightly longer distance. A beam splitter puts the two beams initially 180° out of phase with each other. Therefore, at rest, when the two beams impinge upon the photodetector, they cancel each other so that the output is zero. When the path length changes, the phase difference will change and the photodetector output will be non-zero. The maximum output is achieved when the input angular rate results in the path change being equal to half the wavelength of the light beam. The output is inherently analog. The power supply requirement is typically 28 VDC at 10 watts or less.

Since about the mid 1990s, micro-electro-mechanical systems (MEMS) technology has been incorporated into gyroscope development (Figure 3-75). The new MEMS attitude and rate gyroscopes require very little power, are very durable, and are very small compared to their predecessors. Micro-machined tuning fork structures are electrostatically driven to resonance. These structures measure angular rate by using the Coriolis force, which can be expressed as:

$$\boxed{F = 2m\omega V} \quad \text{Eqn. 3-18}$$

A Coriolis acceleration is generated in the device by the angular rotation of the vibrating MEMS structure. The Coriolis force is converted to a voltage by the detector element and associated signal conditioning circuitry. Since the mass of the structure is known, as well as the vibration velocity, the angular rate ω can be derived and output accordingly.

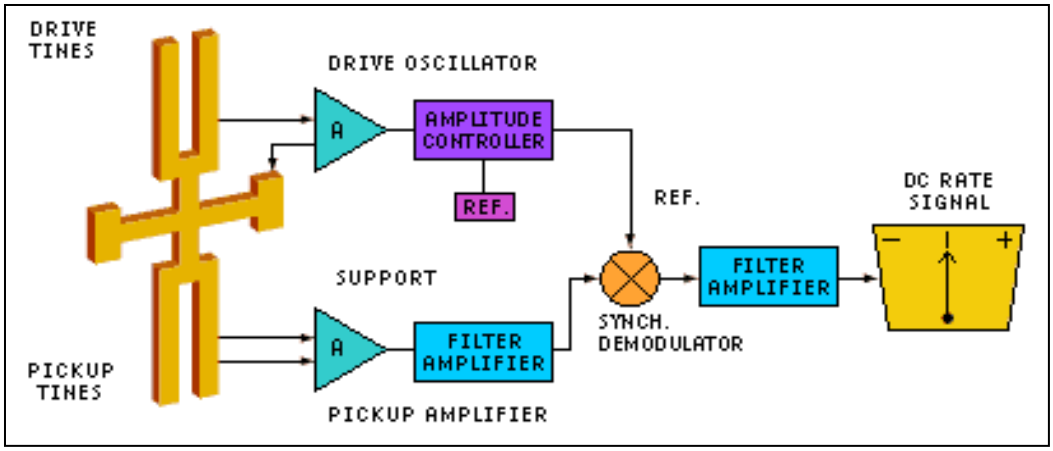

Figure 3-75. Micro-Electro-Mechanical System Gyroscope

These chip-size devices are often used in conjunction with MEMS accelerometers to produce small, lightweight six-degree-of-freedom motion sensors (pitch, roll, yaw rate, and acceleration in orthogonal directions: x, y, and z). When located at or near the CG of a test item, the whole body motion during a test maneuver can be measured and characterized. These motion sensors, also known as inertial measurement units, are available in a variety of rate and acceleration ranges. These sensors typically produce output of high-level analog and require +15 VDC or 28 VDC power at 10 watts or less.

CHAPTER 4

Signal Conditioning

4.1 Introduction

Signal conditioning transforms a signal, typically from a transducer, into another form of that signal. The reason for doing this is simple. The original signal is not suitable to be used as an input that is normally sent to a data acquisition system. The original signal might not be suitable because the voltage level is too low, there is some inherent high-frequency noise on the signal, or a transformation of the signal must occur before being time sampled.

In general, signal conditioning is used to make an optimal match between signal source and the data acquisition system.

4.2 Analog Signal Conditioning

When instrumentation engineers discuss signal conditioning, they are usually talking about analog signal conditioning. Traditionally, data acquisition systems have acquired analog data in the form of temperatures, accelerations, strains, positions, etc. This type of data has always required analog signal conditioning in order for the data system to accept it as an input source. For example, the FS output of a transducer may be in the range of 0-20 mVDC where the input range to the data system is 0-5 VDC. In this case, it is obvious that voltage amplification is required to take advantage of the dynamic range of the instrumentation system. Another example could be the case where the output of the transducer is a high-level signal in the range of 0-5 VDC and the data system input is +2.5 VDC. For this case, the signal conditioning required would be a zero shift.

Analog-signal-conditioning types can be lumped into several categories: amplification (and its opposite attenuation), signal conversion (frequency-to-DC, AC-DC, etc.), and zero shifting. Filtering can also be lumped into this category but a separate section has been dedicated for this topic.

Amplifiers are by far the most common piece of signal conditioning because of the wide range of uses, such as amplification, attenuation, DC-shifting, impedance matching, common-mode rejection, isolation, and others. Many operational amplifiers exist for very specific requirements, such as voltage-in/voltage-out, current-in/voltage-out, and charge-in/voltage-out (commonly referred to as a “charge amplifier”). Determining the type of amplification is the key in providing accurate measurements through the data acquisition system.

Voltage amplifiers suitable for instrumentation system use typically provide high input impedance, low output impedance, appropriate frequency response for the parameter, stable gain over temperature, and sufficient output drive capability. In order to provide an accurate measurement, the transducer’s output must not be influenced by the voltage amplifier. In the past this was not a trivial exercise, but for today’s high-input-impedance operational amplifiers this is accomplished by the amplifier requiring very little current from the transducer and insuring minimal intrusion into the measured quantity. This minimizes source loading thus increasing measurement accuracy and insuring minimal intrusion into the measured quantity. This is true for transducer signals referenced to ground (single-ended) and transducers that

output difference signals (differential). Because the transducers (such as in Wheatstone bridge implementations) in this second group are very common, an operational amplifier was optimized for this type of signal. The amplifier is called the instrumentation amplifier or "in-amp."

The instrumentation amplifier amplifies the difference between two signals. This difference is usually in the mV range. When this number is compared to the common mode voltage, (the voltage on each terminal of the instrumentation amplifier referenced to ground) it is obvious that these instrumentation amps must have very large common mode rejection values. This value is the CMRR, which in decibel (dB) is defined as:

$$CMRR(dB) = 20\log\left(\frac{G_{diff}V_{cm}}{V_{out}}\right) \qquad \text{Eqn. 4-1}$$

where G_{diff} is the differential gain of the amplifier;
V_{cm} is the common mode voltage at the input of the in-amp;
V_{out} is the output resulting from the presence of V_{cm} at the input.

This is a very important concept in the world of measurements. Common mode voltages commonly exist in an instrumentation system. It should also be noted that CMRR is tied directly to frequency with less common mode rejection occurring at higher frequencies. The graph in Figure 4-1 illustrates this fact.

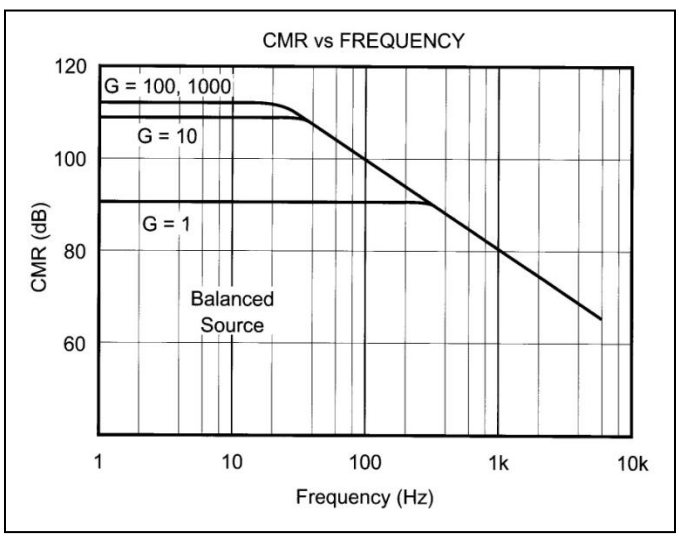

Figure 4-1. CMR Versus Frequency

Errors due to stray common mode voltages are very common in every instrumentation system. Any common mode noise not rejected will be amplified and introduced as measurement error. Relying strictly on the instrumentation amplifier's rejection capability is not a good design practice. Pay close attention to cable routing and cable shielding to minimize stray common mode voltages.

Isolation or buffer amplifiers also play a key role in an instrumentation system. Typically, these amplifiers are characterized by a high isolation resistance (~10^{12} Ω), very high input impedance, high CMRR, and gains on the order from 1-10. These are commonly used to

isolate critical system parameters, such as flight control signals, from the instrumentation system. Opto-isolators also provide a level of isolation and provide another means of isolating signals from the data system.

Sometimes the transducer output is at a level too high for the data system to accurately capture. When this is the case, attenuation of the signal must occur. Sometimes this is as simple as providing a resistor dividing network provided the transducer has the drive capability so the impedance of the network does not load the output (see Figure 4-2).

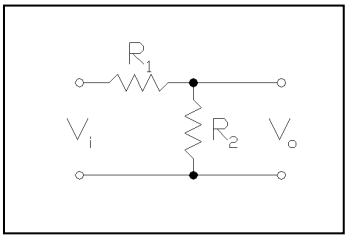

Figure 4-2. Resistor Divider Network

Another method, shown in Figure 4-3, is to use an amplifier configured to provide a fractional gain.

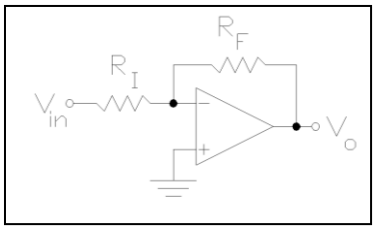

Figure 4-3. Fractional Gain Inverting Amplifier

Current amplifiers also exist and most commonly are the current-to-voltage amplifiers (which usually reside near the data acquisition system input). Another method used is to pass the current through a precision resistor and amplify the voltage across the resistor with a common voltage-to-voltage amplifier. These will be discussed below.

If there are accelerometers in the test article, chances are some will be PE-type transducers. The PE transducers are operated in two modes. The PE transducers rely on the self-generating PE effect of either quartz crystals or ceramic materials to produce an electrical output signal proportional to the physical input. Some of these transducers have built-in microelectronic amplifiers, which convert the high-impedance charge signal from the crystals into a low impedance voltage output signal. The PE transducers that do not contain additional circuitry are known as charge-mode or high-impedance-output transducers, therefore requiring a charge-in/voltage-out amplifier or charge amplifier (see Figure 4-4). The PE transducers output a high impedance level of charge based upon a dynamic input, such as shock or vibration. The charge amplifier senses this by charging a highly stable capacitor in its feedback loop. Making a few assumptions, mainly that the open-loop gain of the amplifier is very large, the low impedance output of the amplifier can be expressed as:

$$V_{out} \cong -\frac{q_a}{C_f}$$

Eqn. 4-2

where q_a is the charge sensitivity of the accelerometer in picocoulombs per unit of gravity (pC/g) (in this example);
C_f is the feedback capacitor.

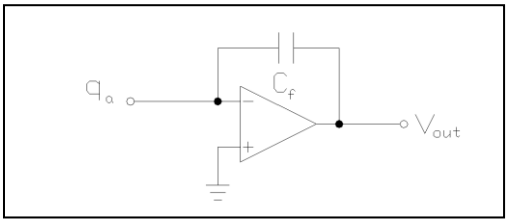

Figure 4-4. Simplified Charge Amplifier

Figure 4-5 shows a typical charge mode sensor system including sensor, low noise cable, and charge amplifier. A PE transducer has a high output impedance and can be modeled as a signal source and a capacitor. The PE sensing element generates an electrical charge signal. A charge amplifier or in-line charge converter (explained above) utilizes high-input-impedance, low-output-impedance inverting amplifiers with capacitive feedback. Adjusting the value of the feedback capacitor alters the transfer function or gain of the charge amplifier. Typically, charge mode transducers are used when high-temperature survivability is required. If the measurement signal must be transmitted over long distances, use an in-line charge converter near the transducer. This minimizes the chance of noise and prevents transducer sensitivity loss.

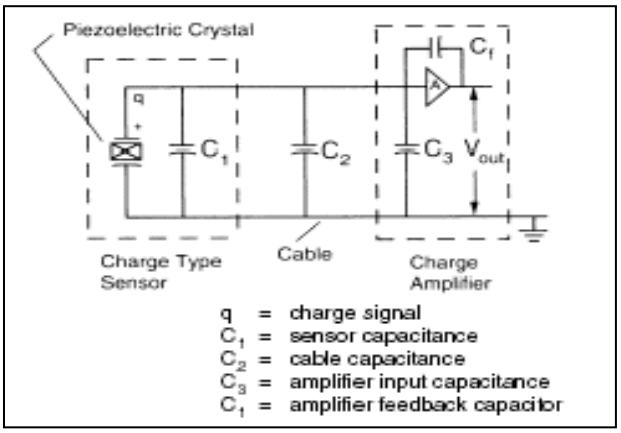

Figure 4-5. Typical Piezoelectric Transducer, Cable, and Charge Amplifier

Because of the high-impedance nature of the output signal generated by charge mode transducers, several important precautionary measures should be followed. Use special low-noise coaxial cable between the transducer and the charge amplifier. This cable is specially treated to reduce triboelectric (motion-induced) noise effects. Also, always maintain high insulation resistance of the transducer, cabling, and connectors. To insure high insulation resistance, all components must be kept dry and clean.

The last type of signal conditioning to be discussed in this section is zero shifting, commonly referred to as offset. This involves providing a DC bias, either positive or negative, usually along with amplification, to the transducer signal. As simplistic as this method is, it is used throughout the instrumentation community to optimize the transducer signal for data acquisition.

4.3 Filtering

Entire textbooks and courses have been dedicated to this vast topic. Filters in this context are used as frequency-selective signal conditioners. Filtering is used to transmit wanted and attenuate unwanted frequency content in the measurement signal. They reduce the amount of noise outside of the data bandwidth and can also be used to select certain bands of frequencies. Filtering is always used for analog signals when digitization is done. By nature, instrumentation systems are band-limited. Filtering controls where the band limiting occurs.

In any instrumentation system, there are two distinct and separate reasons for capturing the data. Either you want the frequency content of the waveform or you want the waveform itself. Filtering for frequency content is much easier. The instrumentation engineer must satisfy two requirements:

a. All frequencies of interest must lie in the flat portion of the filter transfer function (flat amplitude response);
b. All amplitudes must lie in the linear range of the instrumentation system's transfer function (I/O linearity);
c. In order to reproduce the waveform, a third criterion is added: all frequencies must lie in the linear phase portion of the instrumentation system's transfer function (linear phase response).

Improper filter selection can corrupt an otherwise well designed instrumentation system. Make filter choices wisely.

There are four main types of filters:

a. Low-pass. As their name suggests, low-pass filters pass frequencies *below* their cut-off value.
b. High-pass. High-pass filters pass frequencies *above* their cut-off frequency.
c. Band-pass. Band-pass filters *pass* frequencies within a given band.
d. Band-reject. Band-reject filters *reject* frequencies within a given band.

There are ideal filters, which are nice to talk about, and there are practical filters that we have to use. Practical filters will provide attenuation in the stop-band but will subject the signal to attenuation, ripple, phase-shift, or delay in the pass-band. There are two general guidelines when dealing with practical filters:

a. The closer the practical filter's amplitude response approximates the ideal filter's amplitude response, the less linear will be the practical filter's phase response.

b. Conversely, a practical filter with an optimized linear phase response will have a less than ideal (not flat) amplitude response.

Therefore, we have two major categories of filters: there are filters with optimized amplitude response and there are filters with optimized phase response.

Filters lumped in the amplitude category include Butterworth, Bessel, Chebyshev, and Cauer (or elliptical) filters. Butterworth filters exhibit no pass-band ripple but have a roll-off characteristic (expressed in dB/decade of frequency) that is not as steep as other filters. Chebyshev filters do have a steeper roll-off characteristic than Butterworth filters but they do introduce pass-band ripple. For steep roll-off characteristics, elliptical filters are the choice at the expense of pass-band ripple and stop-band ripple. Bessel filters are considered to provide linear phase response and little delay distortion in the pass-band. In the end, the characteristic of the signal to be filtered will determine which type of filter to use.

4.4 Sampling Theory

This section will discuss sampling theory and the limitations in applying it to the typical instrumentation system.

4.4.1 Nyquist sampling theorem

In 1928, Nyquist first put forth his sampling theory; however, it was not until 1949 that a true legend in communications theory, Claude E. Shannon, proved it! Consequently, the sampling theory is referred to as both the Nyquist Sampling Theorem and the Shannon Sampling Theorem. Most literature seems to refer to it as the Nyquist Sampling Theorem so we will use this convention in this handbook.

The Nyquist Sampling Theorem is a very useful tool in understanding sampling rates; however, the application of it, without considering the real-world limitations of a modern instrumentation system and the reconstruction technique to be used, can result in very poor signal reconstruction. The Nyquist Sampling Theorem states that the information of a signal can be recovered if the signal is sampled at a minimum of twice the highest frequency (also called the Nyquist frequency) contained in the signal. The Nyquist Sampling Theorem is depicted in Figure 4-6.

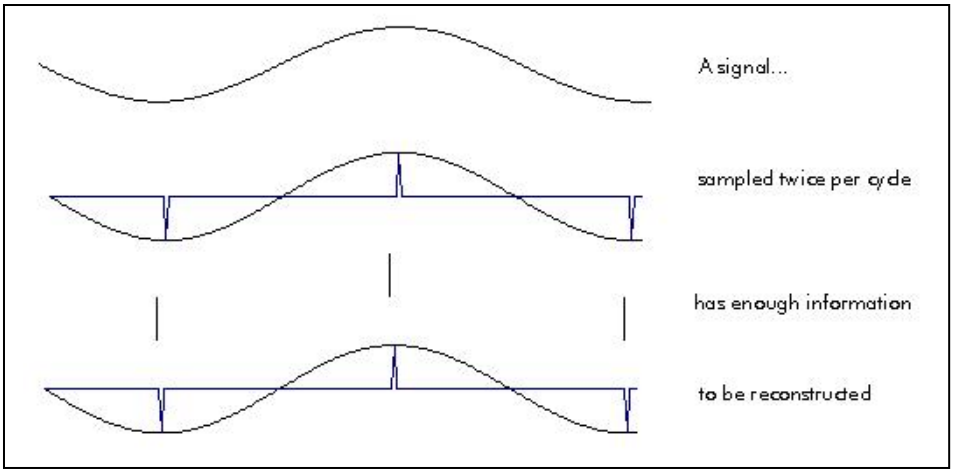

Figure 4-6. Waveform Sampling

The proof of the Nyquist Sampling Theorem is a somewhat cumbersome mathematical exercise that assumes rather ideal conditions. Referring to the Figure 4-6, notice that to take the samples (pulse train) on the third line and reconstruct the signal as in line 4, the user must do some precise smoothing (filtering). Typically, data acquired by instrumentation systems receives no output smoothing or filtering. This is a severe limiting factor in applying the Nyquist Sampling Theorem to the typical instrumentation system. In many respects, the instrumentation system designer operates in much less than ideal conditions required for the theorem to be valid. These less than ideal conditions (imperfect pre-sample filters, no reconstruction filters in the ground station, etc.) result in significant amplitude inaccuracies in the reconstruction of a signal sampled at or near the Nyquist sampling rate. In the typical instrumentation system, if amplitude accuracy is required, sampling data at the Nyquist sampling rate is woefully inadequate. Given the limitations inherent in the typical instrumentation system and ground station, if amplitude accuracy is required, it is common to sample at eight to ten times the highest frequency of interest. On the other hand, even given these limitations (imperfect pre-sample filters, no reconstruction filters in the ground station, etc.), it is possible to accurately determine frequency content (without regard to amplitude) of a signal sampled near the Nyquist sampling rate.

The ability to accurately reconstruct the frequency content (without regard to amplitude) of a signal sampled near the Nyquist sampling rate is crucial to the prevention of aliasing. Aliasing will be discussed in the next section.

The advent of digital data acquisition systems presented the instrumentation designer with several new challenges. Paramount among these is “At what rate do I need to sample a signal to allow reconstructing it to the required level of accuracy?” As pointed out in this section, the answer to this question requires in depth knowledge of the reconstruction technique to be used in addition to the instrumentation system. The derivation of a mathematically rigorous answer is situational-dependent and requires error analysis that is beyond the scope of this handbook. Appendix A contains texts that provide tools to definitively answer this question.

4.4.2 Aliasing

Aliasing is a fascinating and often misunderstood concept. In daily life, most of us have seen several examples of aliasing. An aircraft propeller or the spokes of a wheel appear to turn very slowly when in actuality the propeller or wheels are turning very fast. While watching television you notice the computer monitors in the background seem to “flicker” due to their

slow update rates. The rapid frequency of rotation of the turning propeller or spokes of a wheel is being "sampled" at a much lower frequency by your vision system. By under-sampling you have artificially created a frequency of rotation so that the spokes or propeller appear to turn very slowly. The computer monitors, in the back of the television studios, are no doubt updated at a comfortable-to-the-eye 60 or 70 Hz rate, although they are displayed on your television at a rate of about 30 Hz. This under-sampling gives the impression of an artificially low frequency of update rate on the computer monitors. In either case, aliasing has distorted your perception.

Similar to these examples, in the field of instrumentation, sampling a signal at too low a rate can produce aliasing. Aliasing distorts the reconstruction of the original signal. When aliasing conditions are met, the reconstruction of a sampled waveform can contain frequency components that *did not* exist in the original waveform! Such artifacts are just like those in the examples of the aircraft propeller, the spokes of the wheel, or the computer monitor. Unfortunately, it is often never discovered and, if discovered, cannot be cured via post-processing of the sampled data. An instrumentation designer must be knowledgeable and ever vigilant against this silent destroyer of data. Aliasing is graphically illustrated below in Figure 4-7.

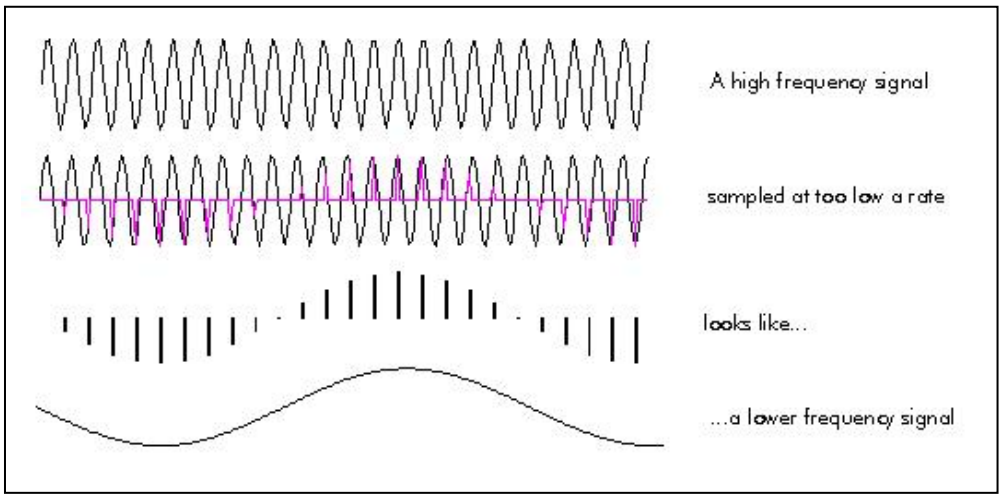

Figure 4-7. Waveform Reconstruction

Aliasing is a frequency phenomenon. As pointed out in the previous section, even given the typical limitations of the instrumentation system and ground station, the frequency content of a signal can be accurately reproduced if the signal is sampled at greater than the Nyquist rate. Consequently, sampling at the Nyquist rate will prevent the frequency phenomenon known as aliasing. If the signal is sampled at a lower rate, aliasing will occur and distort the reconstructed waveform. To illustrate this point let's examine what happens to a 900 Hz sinusoidal signal when sampled at less than the Nyquist rate. When aliasing occurs, any frequencies above the Nyquist frequency will be aliased to a lower frequency in the reconstructed waveform. For example, if the 900 Hz (Nyquist frequency) sinusoid is sampled at 1 kHz, the alias frequency in the reconstructed waveform would be at 1 kHz-900 kHz = 100 Hz. To accurately acquire frequency information, and prevent aliasing, requires *at least* a sampling rate of 1.8 kHz.

If you have knowledge of the frequency content of the signal, the prevention of aliasing simply involves using a sampling rate that is at least twice the highest frequency present in the

signal. In many cases, the instrumentation engineer does not have knowledge of the frequency content of the signal or does not have the ability to sample at a high-enough rate. In these cases, the instrumentation engineer needs to limit the frequency content of the signal prior to sampling. This is accomplished via an anti-aliasing filter (sometimes referred to as a presample filter).

4.4.3 Anti-aliasing filters

With the advent of high-speed ADCs and their applications in data acquisition systems, anti-aliasing filters play a major role. Anti-aliasing filters filter out unwanted high-frequency content of the signal before digitization. This places the burden upon the instrumentation engineer to determine the highest frequency required for the measurement.

There are rules of thumb for selecting anti-aliasing filters. All ADCs convert the analog signal to a digital representation in *n*-bit words where *n* is the number of bits of the converter. The amplitude of any frequency component above the Nyquist frequency should be no higher than the LSB. Therefore, for *n*=12 ADC, there should be 6 dB**n*=72 dB of attenuation. Real-world attenuation numbers are in the range of 40-50 dB. The combination of required Nyquist frequency and attenuation numbers give the instrumentation engineer an idea of the required anti-aliasing filter required. Remember, once aliasing occurs, the original information in the signal is lost. Therefore, it is very important to sample at the proper rate and to select the proper low-pass anti-aliasing filter.

4.5 Wheatstone Bridge

Because the Wheatstone bridge is such an important topic in an instrumentation system, a section will be dedicated to the topic. There is no other measurement component used so widely. Wheatstone bridges are normally associated with strain gages but are also used as bridge completion networks for resistive transducers, such as RTDs.

4.5.1 Wheatstone bridge configurations

The Wheatstone bridge consists of four resistances, R_1-R_4, and a voltage source *V* for exciting the bridge (Figure 4-8). The transducer is placed in one arm of the bridge with a steady-state resistance equal to the other three resistances (this is known as a quarter bridge configuration). Therefore, there is only an output of the bridge when the transducer's steady-state resistance changes. There can be two elements in two arms or all four resistances can be transducers. These are known as half-bridge and full-bridge configurations.

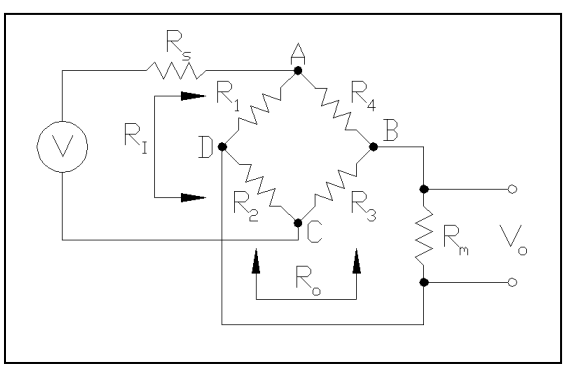

Figure 4-8. Wheatstone Bridge

Two additional resistances have been added for completeness. R_s is the source resistance of the excitation source looking back into its terminals and R_m is the input impedance of the measurement device. R_I is the input impedance of the bridge and R_o is the output impedance of the bridge. What follows is a derivation of the output voltage V_o of the bridge. The voltage between points C and D and points B and D are

$$\boxed{V_{CD} = \left(\frac{R_2}{R_1 + R_2}\right)V}$$

Eqn. 4-3

$$\boxed{V_{BD} = \left(\frac{R_3}{R_4 + R_3}\right)V}$$

Eqn. 4-4

Therefore, the voltage between points B and C is:

$$\boxed{V_{BC} = V_{BD} - V_{CD} = \left(\frac{R_3}{R_4 + R_3} - \frac{R_2}{R_1 + R_2}\right)V = \left(\frac{R_1R_3 - R_2R_4}{(R_1 + R_2)(R_3 + R_4)}\right)V}$$

Eqn. 4-5

If the balanced bridge is used, which is commonly done, this means $R_1R_3=R_2R_4$, which also means in a steady-state condition V_o=0. Now, define $a=R_2/R_1= R_3/R_4$. If the bridge nonlinearity term η is included, the total equation for the bridge circuit becomes

$$\boxed{V_o = V\left(\frac{1}{1+\frac{R_s}{R_i}}\right)\left(\frac{1}{1+\frac{R_o}{R_m}}\right)\left(\frac{a}{(1+a)^2}\right)\left[\frac{\Delta R_1}{R_1} - \frac{\Delta R_2}{R_2} + \frac{\Delta R_3}{R_3} - \frac{\Delta R_4}{R_4}\right](1-\eta)}$$

Eqn. 4-6

This is the total Wheatstone bridge equation. If R_m is assumed to be large (>10 MΩ), then the second term approaches 1. If R_s is assumed to be small (<0.01 Ω), then the second term approaches 1. As was stated, most bridge circuits have $R_1= R_2= R_3=R_4$, which makes the fourth term equal ¼. This leaves the equation in the familiar form

$$\boxed{\frac{V_o}{V} = \frac{1}{4}\left(\frac{\Delta R_1}{R_1} - \frac{\Delta R_2}{R_2} + \frac{\Delta R_3}{R_3} - \frac{\Delta R_4}{R_4}\right)(1-\eta)}$$

Eqn. 4-7

One very important point should be made here. The input is in terms of ΔΩ/Ω, which is normally mΩ/Ω. This makes the output in terms of mV/V, not mV!

4.5.2 Wheatstone bridge (some guidance)

Some important notes on the Wheatstone bridge are shown below.

a. The Wheatstone bridge is very sensitive, on the order of one part per million.

b. The bridge, if mechanically configured properly, allows you to measure what you want and throws out a number of noise levels (temperature changes, drifts of transducer, magnetic field effects, etc.).

c. For some applications where ΔR is small, the nonlinearity terms can be neglected, sometimes not.

d. Use precision resistors when completing the bridge and place them in the same environment as the transducer when possible to neglect the effects of item 5.

e. The bridge will measure $\Delta R/R$ changes no matter where they came from. Intra-bridge wiring is usually the culprit as is long-wire runs between the bridge and the signal conditioning.

4.5.3 Constant current loop

Constant-current excitation, sometimes referred to as the Anderson loop, is a measurement circuit topology alternative to the Wheatstone bridge. The output voltage of the loop is inherently linear and twice the level available from a bridge for the same power dissipation in the sensing elements. The loop topology is immune to many lead wire effects, especially unknown levels of and even random variations in lead wire impedance. Both topologies provide a differential output signal that represents the algebraic sum of two or more electrical impedances. The bridge topology accomplishes signal subtraction passively with the primary disadvantages of inherent nonlinearity and sensitivity to lead wire effects. The loop topology accomplishes signal subtraction actively by means of either dual-differential or "triferential" subtraction circuit functions with the primary disadvantages of some added complexity and the small but measurable noise inherent in active circuitry.

Use of the Wheatstone bridge is indicated whenever it can perform adequately in a measurement application. Use of the Anderson loop is indicated when its several advantages make some added complexity.

4.6 Digital Signal Conditioning

Digital signal conditioning can be considered as changing one form of digital data to another form. An example would be the serial-to-parallel or parallel-to-serial conversion. Some even consider the analog-to-digital conversion as digital signal conditioning. Another example would be on-board processing of digital data before recording or transmission. This processing could be as simple as adding two measurements together or as computationally intensive as performing a Digital Fourier Transform on a vibration measurement.

Digital multiplexing can also be considered as digital signal conditioning, one type of digital data is transformed into another type. Sometimes it is not practical to place an ADC on each parameter so one central ADC is used and inputs are multiplexed to it. When multiplexing analog signals, it is critical to keep noise levels at an absolute minimum as well as utilizing high-quality multiplexer and ADC.

Another form of digital signal conditioning related to instrumentation systems is digital filtering. As with analog filtering, there have been books dedicated to this topic. Given two

comparable filters, digital filters can vastly out perform their analog counterparts in terms of impulse response. Many analog filters can be approximated with digital implementations.

There are two forms of digital filters. They are the finite impulse response (FIR) filters and the infinite impulse response (IIR) filters. The FIR filters can perform far better than the IIR filters, but they execute much more slowly. The IIR filters have the advantage of performing exactly like the analog filters discussed above (Butterworth, Chebyshev, elliptical) and are easier to design; however, the phase response is nonlinear. FIR filters take more computational power to design and implement but are much more flexible in terms of frequency response and they have linear phase characteristics. The test requirement drives which type of filter is chosen, but it must be remembered that up-front digitization must occur first.

The last type of digital signal conditioning to be discussed is MIL-STD-1553 bus capture. Upon initial review, most engineers would not consider this to be signal conditioning; however, MIL-STD-1553 bus capture is a type of signal conditioning. From the definition, this is turning one type of digital data (MIL-STD-1553) to another type (PCM). The MIL-STD-1553 is a command/response bus that makes the captured data asynchronous. The bus is controlled by a BC talking to RTs operating at a bus rate of 1 Mbps. There are command words, status words, and data words on the bus, all of which can be captured. The digital signal conditioner must monitor the bus and condition the MIL-STD-1553 word into something usable for an instrumentation system. For a formal definition of MIL-STD-1553 bus capture refer to IRIG Standard 106, Chapter 8.

4.6.1 Signal conditioning for transducers

There is a wide variety of signal sources that need signal conditioning before being sampled by a data system. Some transducers are self-generating (thermocouples) and some are not (RTDs). Some have high-level outputs, some are low-level. Information can be contained in resistance, voltage, current, charge, etc. This section presents information on different types of signals an instrumentation engineer can expect to encounter. The signal conditioning for these signals is no different from what has previously been discussed. This section was meant to cover common signals and shouldn't be considered an all-inclusive list. There will always be a special case in any instrumentation design.

4.6.2 Understanding signal-specific signal conditioning

A voltage source can come directly from self-generating transducers or resistive-type transducers supplied with voltage or current excitation. Excitation is a voltage or current providing a means for the transducer to output a signal. In the case of voltage excitation, the output of a resistive transducer is a smaller version of the excitation voltage modulated by the information being measured. As you may notice, a stable excitation source over temperature, shock, vibration, etc., is required and in some cases, the excitation can be the limiting factor in an accurate measurement. The voltage signal conditioner must not influence or load the source, must provide isolation, and transform the input signal into a suitable signal for the instrumentation system. This transformation is in the form of amplification, attenuation, and zero-shifting.

There are various ways to acquire low-level current measurements, and the signal conditioning for each varies. The most common method is to use a high-precision resistor and measure the voltage across the resistor. The two methods for current measurements are *high-side* (Figure 4-9) and *low-side* (Figure 4-10). High-side measurement involves the use of a

differential amplifier to measure the voltage across the resistor and report that measurement as a ground referenced signal.

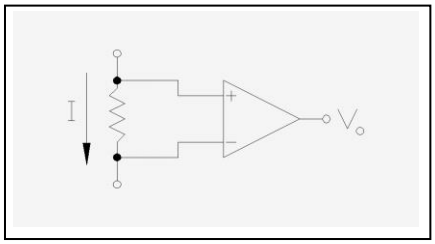

Figure 4-9. High-Side Current Measurement

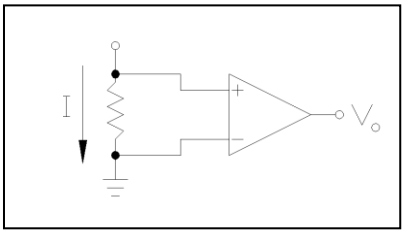

Figure 4-10. Low-Side Current Measurement with Op-Amp

Most in-amps will perform this measurement but care must be taken when selecting this differential amplifier. Low-side measurement involves measuring the current flowing to ground. The voltage at the ungrounded terminal is used for the measurement so a differential amplifier is not required. In real-world scenarios, “ground” can sometimes be a nebulous quantity so performing high-side measurement even with the resistor referenced to ground is the preferred method. For both cases, the output voltage can be expressed as:

$$V_o = A_v IR \qquad \text{Eqn. 4-8}$$

where A_v is the gain of the op-amp.

Some items to be considered for sources of error are voltage drop across the resistor interfering with the system under test, power dissipation of the resistor, parasitic series and parallel resistance biasing the measurement, self-heating, and dynamic effects on the precision resistor. Another method of current sensing is current-to-voltage conversion using an operational amplifier. These are normally used for very low-level currents. A simplistic example is shown in Figure 4-11.

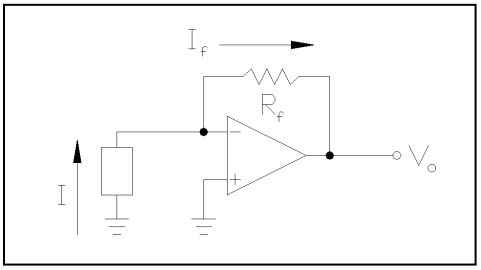

Figure 4-11. Simplistic I-V Converter

For this example, the output voltage can be expressed as the following equation.

$$V_o = -IR_f$$

Eqn. 4-9

For higher values of current to be measured, these methods are not practical. Magnetic current sensing and current transformers are used for these applications. There is a magnetic field produced around every conductor given by the following:

$$B = \frac{\mu_o I}{2\pi r}$$

Eqn. 4-10

where B is the magnetic field;
μ_o is the permeability of free space (1.26×10^{-6} henry/meter);
r is the distance from the center of the conductor;
I is the current flowing through the conductor.

Magnetic current sensors measure the magnetic field around a wire. Given this quantity, the current flowing through the wire is known. Current transformers are normally used for sensing higher levels of AC current. The current through the windings can be expressed as:

$$i_s N_s = i_p N_p$$

Eqn. 4-11

where i_s/i_p is the current through the secondary and primary windings;
N_s/N_p is the number of secondary and primary windings.

As with all transformers, as the frequency increases (>5-10 kHz) mutual coupling effects and secondary reactance must be taken into consideration.

The first method commonly used for temperature measurement is the use of an RTD. The RTDs are very common due to the fact they are easy to work with. The RTDs are manufactured from metals whose resistance increases with temperature that follow the equation:

$$\rho_t = \rho_o \left[1 + \alpha (t - t_o)\right]$$

Eqn. 4-12

where ρ_o is the resistivity at a standard temperature t_o;
ρ_t is the resistivity at temperature t;
α is the temperature coefficient ($°C^{-1}$).

If this equation is rearranged, we get the familiar form:

$$\frac{R}{R_o} = \alpha t + 1$$

Eqn. 4-13

Therefore, the signal conditioning requirement is nothing new from what has already been discussed. Excitation must be supplied to the RTD and based upon the type and level of excitation, whether or not a bridge configuration is used, and knowing the properties of the metal used in the RTD, the signal conditioning requirement is known.

The second method commonly used to measure temperature is the use of a thermocouple. Thermocouples are normally used to measure high temperatures but if the material is chosen correctly any temperature in the range of –185°C to +1650°C can be measured. As was stated in the Signal Source section, a thermocouple is nothing more than two dissimilar metals joined to form a junction. When two wires are used, the output is defined as:

$$E_{net} = \int_{T_o}^{T_l} (\varepsilon_1 - \varepsilon_2) dt \qquad \text{Eqn. 4-14}$$

where E_{net} is the net output voltage;

ε_1 is the total thermoelectric power of material 1, the summation of the Thomson coefficient, and the temperature derivative of the Peltier coefficient;

ε_2 is the total thermoelectric power of material 2;

T_o is the beginning temperature;

T_l is the ending temperature.

This junction is placed where the measurement is to be taken. One very important concept must be remembered when measuring temperatures and signal conditioning thermocouple circuits. The thermocouple wire is assumed homogeneous. It is very important that each thermocouple wire is exposed to the exact same environment and any disconnects are at the same temperature. Performing a thermocouple measurement also requires a reference temperature. This temperature must be uniform. Any deviations from these requirements <u>will</u> cause a measurement error.

Thermocouple voltage varies with the type of material used for the thermocouple. Most thermocouple voltage tables are referenced to an ice bath. Constructing an ice bath in a test vehicle is usually not practical; but a reference temperature must be known. A common approach is to either provide a zone of constant, uniform temperature at the measurement point or to monitor and record the temperature with the data system using an RTD. The last part is not a requirement but a good check to verify how constant and uniform the temperature was during the test. By knowing the type of thermocouple material and the reference temperature, the voltage signal conditioning will be defined.

Sources of errors are numerous in thermocouple measurements, the main one being a temperature gradient in the thermocouple wire. Specific types of thermocouples generate voltages in proportion to strain and vibration. This is a concern because thermocouples are normally mounted directly to a structure. The second peculiar thermocouple error is galvanic EMF generation. Since thermocouple wires are indeed wires, common-mode voltages are common as are inducted currents along the wires due to the fact thermocouple wires usually are not shielded and appropriately twisted.

Simply stated, a PE accelerometer outputs charge based upon an acceleration along its measurement axis. Of the few materials exhibiting this phenomenon, quartz is the most common. Quartz is highly directional, meaning it will only react to stress along its measurement axis making it almost the perfect transducer material.

It should be clear that a charge amplifier is used in this application. Some accelerometers have internal signal conditioning. The characteristics of internal conditioning need to be determined, characterized, and verified so that no internal event affects the measurement accuracy. Output of the accelerometer will be in pC/g or can be specified in mV/g with an external specified capacitance. There are numerous sources of errors when working with PE accelerometers. The output will vary with temperature, the transducer is mounted incorrectly, the wrong accelerometer is used for the measurement, high- and low-frequency response are not taken into consideration, and transverse sensitivity and special averaging are not thought about. All of these lead to measurement error.

Lastly, we'll cover strain gages. As the name suggests, these transducers measure strain in a given direction. They can be used by themselves or as part of another transducer, a pressure transducer for example. A strain gage has a nominal resistance value R (350Ω is common), which changes ΔR due to applied strain. This can be expressed as:

$$\boxed{\frac{\Delta R}{R} = k\varepsilon_L} \qquad \text{Eqn. 4-15}$$

where k is the GF;
ε_L is the applied strain.

Strain gages are most often used in a Wheatstone bridge, discussed above. There are quarter-, half-, and full-bridge configurations. Regardless of the configuration, an excitation voltage (or current) must be present and the output of the bridge must be signal conditioned. If the excitation source was ungrounded, it would be possible to use a standard op-amp to provide gain and offset for the signal. Since this is usually not the case and since the output from the bridge is in the mV range, common mode voltages can have a significant effect. This dictates the use of an instrumentation amplifier to reduce the common mode effects. Another common practice is to filter these signals to eliminate anti-aliasing effects. In this case, filtering is accomplished after the instrumentation amplifier due to the differential nature of the signal. Differential filters exists, but are not normally used.

4.7 Conclusion

This section has tried to cover general analog and digital signal conditioning concepts. These basic concepts are used throughout the instrumentation community, and the knowledge is necessary for anybody working within the field. Filtering was covered to present why there is a need to filter and where to filter. Lastly, specific types of signals from transducers were introduced, mainly to highlight that the basic concepts previously mentioned covered the signal conditioning needs of these specific examples.

For more in-depth analysis of these concepts, refer to the references listed in Appendix A. These references are presented to aid in search of more detailed information on each topic presented.

This page intentionally left blank.

CHAPTER 5

Flow and Level Measurement

5.1 The Flow Pioneers

Some information for this section is gleaned from "Transactions" Volume 4, previously cited.

A major milestone in the understanding of flow was reached in 1783 when the Swiss physicist Daniel Bernoulli published his book, *Hydrodynamica*. In this book, Bernoulli introduced the concept of the conservation of energy for fluid flows. Bernoulli determined that an increase in the velocity of a flowing fluid increases its kinetic energy while decreasing its static energy. Therefore, a flow restriction will cause an increase in the flowing velocity and also a decrease in the static pressure of the flowing fluid.

The permanent pressure loss through a flowmeter is expressed either as a percentage of the total pressure drop or in units of velocity heads, calculated as $V^2/2$ g, where V is the flowing velocity and g is the Earth's gravitational acceleration. For example, if the velocity of a flowing fluid is 10 fps, the velocity head is then 100/64.4 = 1.55 ft. If the fluid is water, the velocity head corresponds to 1.55 ft of water (or 0.67 psi). If the fluid is air, the velocity head corresponds to the weight of a 1.55-ft column of air.

The permanent pressure loss through various flow elements can be expressed as a percentage of the total pressure drop, or it can be expressed in terms of velocity heads as follows:

Flow element	Number of velocity heads
Orifice	4
Vortex shedding sensor	2
Positive displacement and turbine meters	1 (approximately
Through-flow venturis	<0.5

Therefore, if an orifice plate with a beta ratio of 0.3 (diameter of the orifice to that of the pipe) has an unrecovered pressure loss of 100 inch water column (inH_2O), a venturi flow tube could reduce that pressure loss to about 12 inH_2O for the same measurement. Figure 5-1 and Figure 5-2 contain graphical representations of the concept of the conservation of energy for fluid flows described above.

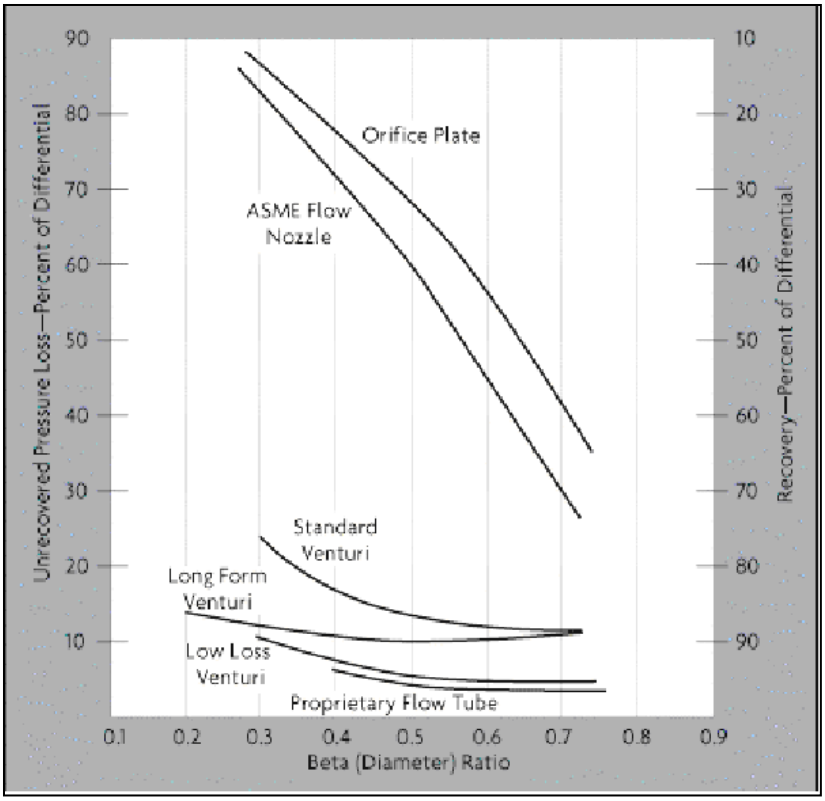

Figure 5-1. Pressure Loss Versus Orifice

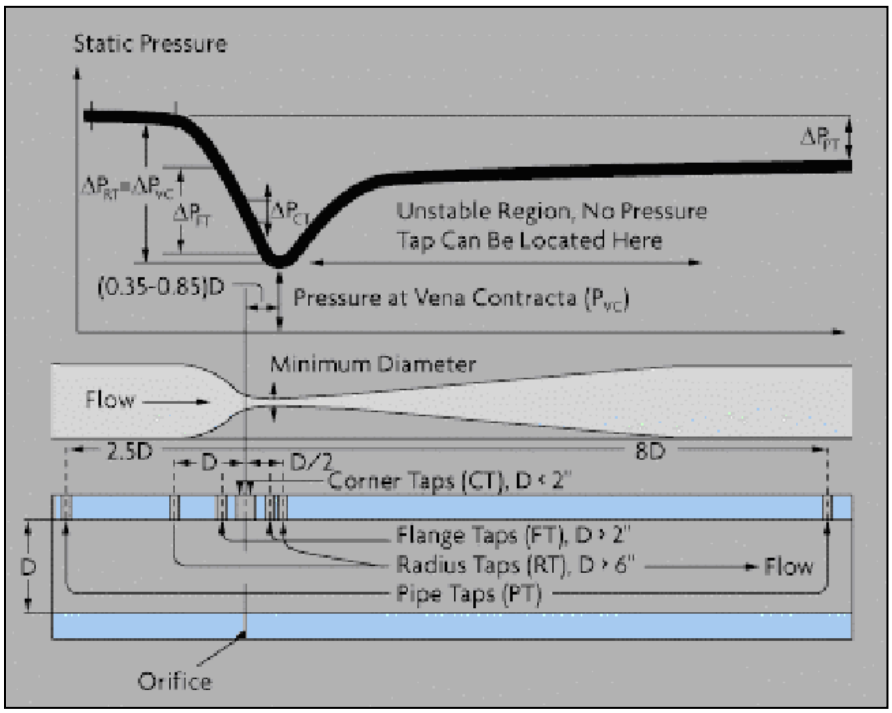

Figure 5-2. Pressure Versus Energy

In 1831, the English scientist Michael Faraday discovered the dynamo when he noted that, if a copper disk is rotated between the poles of a permanent magnet, an electric current will

be generated. Faraday's law of electromagnetic induction is the basis for the operation of the magnetic flowmeter. As shown in Figure 5-3, when a liquid conductor moves in a pipe having a diameter (D) and travels with an average velocity (V) through a magnetic field of B intensity, it will induce a voltage, E, according to the relationship:

$$E = BVDC \qquad \text{Eqn. 5-1}$$

where C is the constant for unit's conversion.

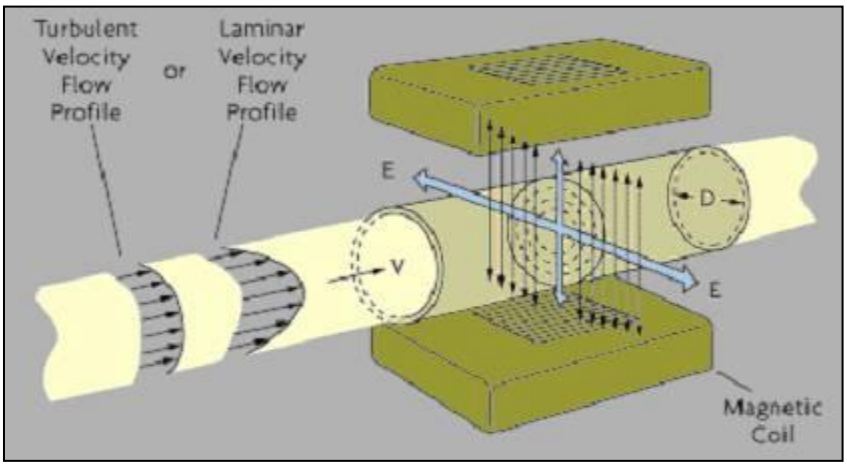

Figure 5-3. Faraday's Law

In recent years, performance of magnetic flowmeters has improved significantly (Figure 5-4). Though improvements include probe and ceramic-insert designs and pulsed magnetic fields, the basic principle of Faraday's law of electric induction has not changed.

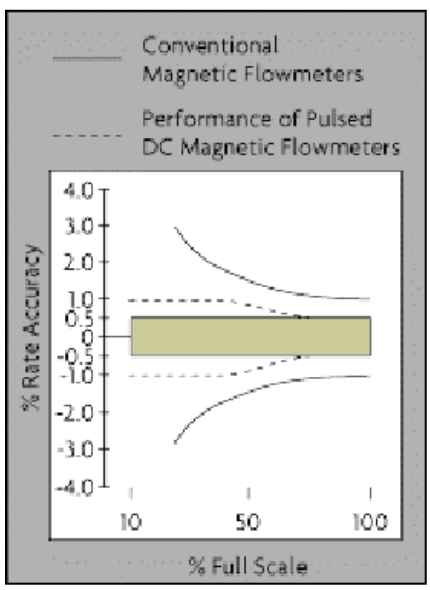

Figure 5-4. Magmeter Accuracy

In 1883, the British mechanical engineer Osborne Reynolds proposed a single, dimensionless ratio to describe the velocity profile of flowing fluids:

$$R_e = \frac{DV\rho}{\mu} \qquad \text{Eqn. 5-2}$$

where D is the pipe diameter;
V is the fluid velocity;
ρ is the fluid density;
μ is the fluid viscosity .

Reynolds noted that, at low Reynolds numbers (below 2000) (Figure 5-5), flow is dominated by viscous forces and the velocity profile is (elongated) parabolic. At high Reynolds numbers (above 20,000), the flow is dominated by inertial forces, resulting in a more uniform axial velocity across the flowing stream and a flat velocity profile.

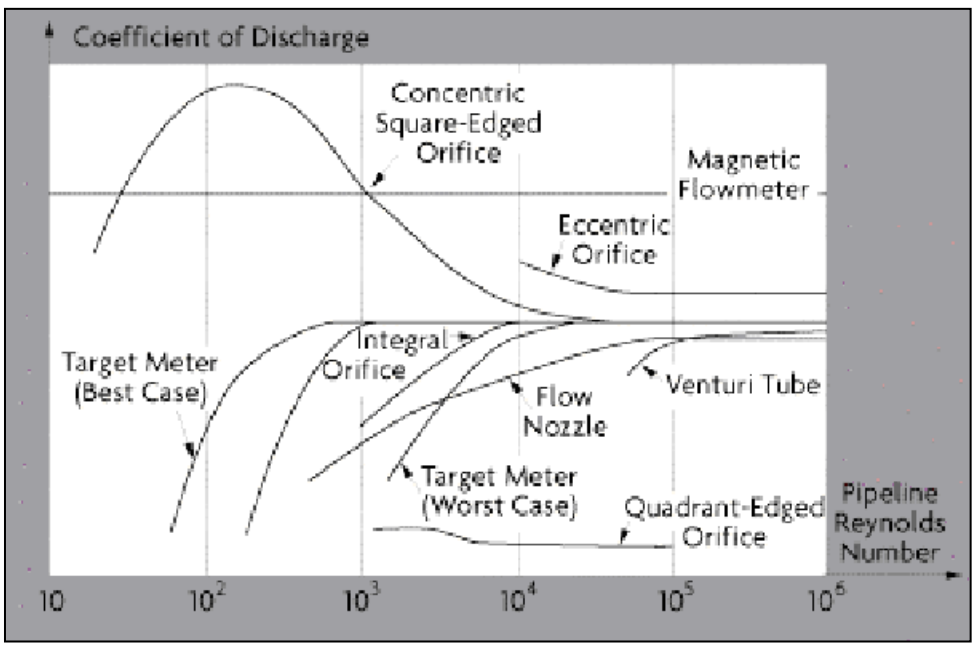

Figure 5-5. Reynolds Numbers

Until 1970 or so, it was believed that the transition between laminar and turbulent flows is gradual, but increased understanding of turbulence through supercomputer modeling has shown that the onset of turbulence is abrupt.

When flow is turbulent, the pressure drop through a restriction is proportional to the square of the flow rate. Therefore, flow can be measured by taking the square root of a D/P cell output. When the flow is laminar, a linear relationship exists between flow and pressure drop. Laminar flowmeters are used at very low flow rates (capillary flowmeters) or when the viscosity of the process fluid is high.

In the case of some flowmeter technologies, more than a century elapsed between the discovery of a scientific principle and using the principle in building a flowmeter. Two examples, discussed below, are the Doppler ultrasonic and the Coriolis flowmeters.

In 1842, Austrian physicist Christian Doppler discovered that if a sound source were approaching a receiver (such as a train moving toward a stationary listener), the frequency of the sound would appear higher. If the source and the recipient are moving away from each other, the pitch will drop (i.e., the wavelength of the sound will appear to decrease). Yet, it was more than a century later that the first ultrasonic Doppler flowmeter (Figure 5-6) was seen in the marketplace. This first ultrasonic Doppler flowmeter projected a 0.5 MHz beam into a flowing stream that contained reflectors such as bubbles and/or particles. The shift in the reflected frequency was determined to be a function of the average traveling velocity of the reflectors. The velocity, in turn, could be used to calculate a flow rate.

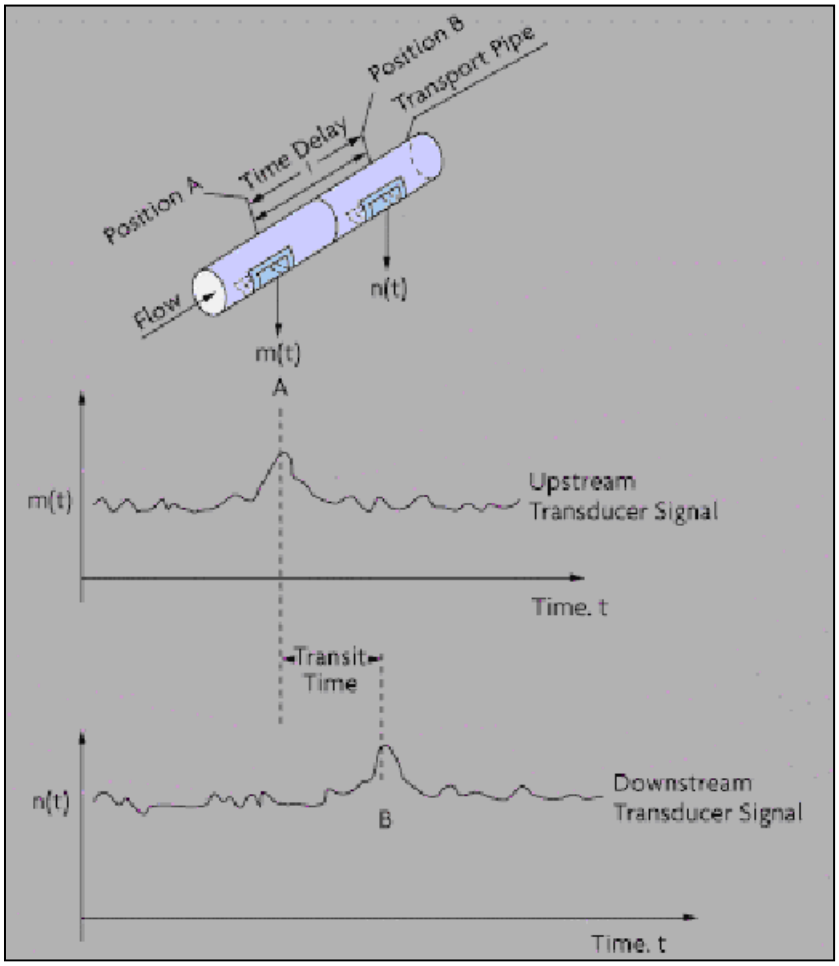

Figure 5-6. Ultrasonic Flowmeter

The history of the Coriolis flowmeter is similar to that of the ultrasonic Doppler flowmeter. In 1843, the French civil engineer Gaspard Coriolis discovered that the wind, ocean currents, and even airborne artillery shells would all drift sideways because of the earth's rotation. In the northern hemisphere, the deflection is to the right of the motion; in the southern hemisphere, deflection is to the left of the motion. Similarly, a body traveling toward either pole

will veer eastward, because it retains the greater eastward rotational speed of the lower altitudes as it passes over the more slowly rotating earth surface near the poles. Because evolution of sensors and electronics was slow, the first commercial Coriolis mass flowmeter was not developed until the 1970s.

The Hungarian-American aeronautical engineer Theodore Von Karman noticed that stationary rocks cause vortices in flowing water and that the distance between the traveling vortices are constant. The distance between the vortices remains constant no matter how fast or slow the water runs. In his subsequent work, Von Karman also observed that, when a flag flutters in the wind, the wavelength of the flutter is independent of wind velocity; rather, the wavelength depends solely on the diameter of the flagpole. These observations formed the theory behind the vortex flowmeter, which determines flow velocity by counting the number of vortices passing a sensor. Von Karman published his findings in 1954 at a time when the ability to count vortices using sensors and electronics initially came into existence. As a result, the first edition of the Instrument Engineers' Handbook in 1968 reported the availability of the first swirlmeter.

The computer has opened new frontiers in all fields of engineering, and the field of flow measurement is no exception. In 1954, mathematician John Von Neumann, another Hungarian-American, built the Uniac computer. More recently, another Hungarian-American, Andy Grove of Intel, developed the integrated circuit. Events such as these are already changing the field of flowmetering. For example, intelligent D/P cells can automatically switch their range between two calibrated spans (CSs) (one for 1-10%, the other for 10-100% of D/P), thereby extending orifice accuracy to within 1% over a 10:1 flow range. Furthermore, it is possible for this accuracy statement to include not only hysteresis, rangeability, and linearity effects, but also drift, temperature, humidity, vibration, over-range, and power supply variation effects.

With the development of superchips, the design of the universal flowmeter also has become feasible. It is now possible to use traceless cross-correlation flowmeters to replace dye-tagging or chemical-tracing flowmeters (that measured flow velocity by dividing the distance between two points by the transit time of the trace). The traceless cross-correlation flowmeter is an elegant flowmeter because it requires no physical change in the process, not even penetration of the pipe. The measurement is based on memorizing the noise pattern in any externally detectable process variable, and noting its transit time as the fluid travels from point A to point B.

5.2 Flow Sensor Selection

The purpose of this section is to provide information to assist the instrumentation engineer in making an informed selection of a flowmeter for a particular application. Selection and orientation tables are used to quickly focus on the most likely candidates for measurement. Table 5-1 and Table 5-2 have been prepared to make available a large amount of information for this selection process.

Table 5-1. Flowmeter Evaluation Table

| FLOWMETER | PIPE SIZE, in. (mm) | GASES (VAPORS) | | | PRESS | | LIQUIDS | | |

Table 5-2. Orientation Table for Flow Sensors

TYPE OF DESIGN	DIRECT MASS-FLOW SENSOR	DIFFERENTIAL PRESSURE-FLOW SENSOR	VOLUME DISPLACEMENT-FLOW SENSOR	VELOCITY-FLOW SENSOR	EXPECTED ERROR FROM VISCOSITY CHANGE	TRANSMITTER AVAILABLE	LINEAR OUTPUT	RANGEABILITY	PRESSURE LOSS THRU SENSOR	APPROX. STRAIGHT PIPE RUN REQUIREMENT (UPSTREAM DIAM./DOWNSTREAM DIAM.)
Orifice (plate or integral cell)		√			H	√	SR	3:1 [2]	H	20/5
Segmental Wedge		√			M	√	SR	3:1 [2]	A	20/5
V-Cone Flowmeter		√				√	SR	3:1 to 15:1 [2]	M	2/5
Target Meters		√			A	√	SR	15:1	M	20/5
Venturi Tubes		√			H	√	SR	3:1 [2]	M	15/5
Flow Nozzles		√			H	√	SR	3:1 [2]	A	20/5
Pitot Tubes		√			M	√	SR	3:1 [2]	M	30/5
Elbow Taps		√			M	√	SR	3:1 [2]	N	25/10
Laminar Flowmeters		√				√	√	10:1 [2]	H	15/5
Magnetic Flowmeters				√	N	√	√	30:1 [7]	N	5/3
Positive Displacement Gas Meters			√			SD	√	10:1 to 200:1	M	N
Positive Displacement Liquid Meters			√		M	SD	√	10:1 [7]	A	N
Turbine Flowmeters			√	√	H	√	√	10:1 [8]	A	15/5
Ultrasonic Flowmeters										
Time of Flight			√	√	N	√	√	20:1	N	20/5
Doppler			√	√	N	√	√	10:1	N	20/5
Variable Area (Rotamater)					A	√	√	10:1	M	N
Vortex Shedding	SD			√	A	√	√	10/1 [6]	A	20/5
Fluidic Oscillation (Coanda)				√	A	√	√	12/1 [6]	H	20/5
Mass Flowmeters Coriolis	√				N	√	√	20:1	M/H	N
Mass Flowmeters Thermal Probe	√			SD	N	√	√	20:1 [7]	M	20/5
Solids Flowmeters	SD					√	√	5:1 to 80:1	-	5/3
Weirs, Flumes					M	√	SD	100:1	M	4/1

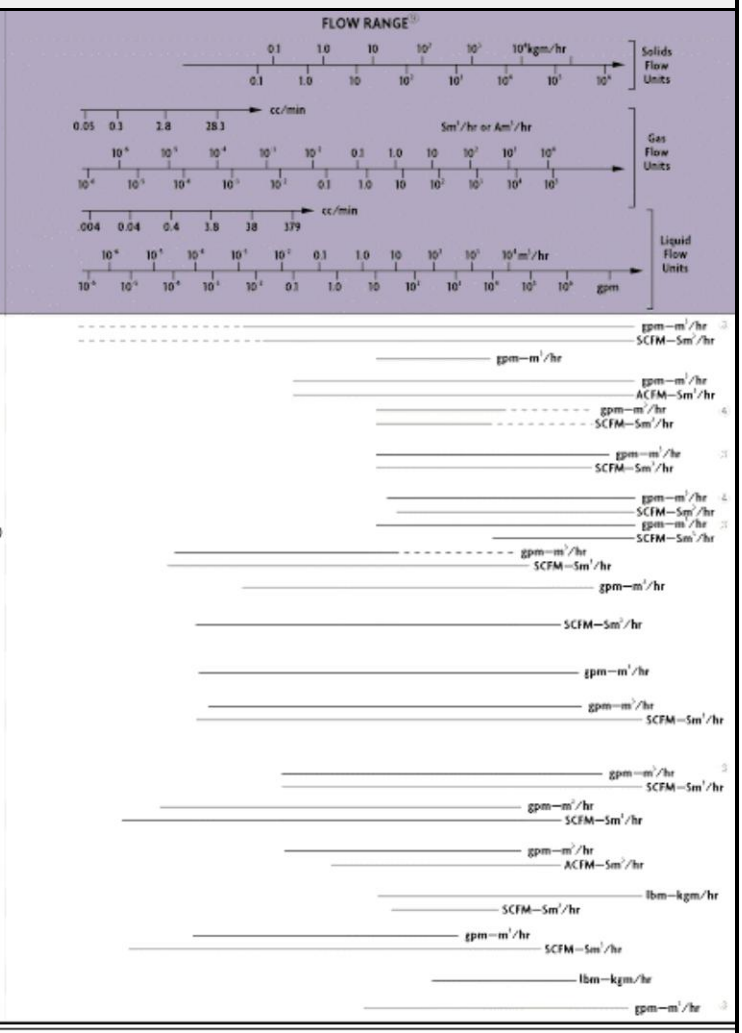

- - - - = Non-standard Range
L = Limited
SD = Some Designs
H = High
A = Average
M = Minimal
N = None
SR = Square Root

1. = The data in this column is for general guidance only.
2. = Inherent rangeability of primary device is substantially greater than shown. Value used reflects limitations of differential pressure sensing device when 1% of rate accuracy is desired. With multiple-range intelligent transmitters, rangeability can reach 10:1.
3. = Pipe size establishes the upper limit.
4. = Practically unlimited with probe type design.
5. = Varies with upstream disturbance.
6. = Can be more with high Reynolds number services.
7. = Up to 100:1.
8. = More for gas turbine meters.
9. = Higher and lower flow ranges may be available. Check several manufacturers.

The selection process should include intangible factors, such as familiarity of plant personnel, their experience with calibration and maintenance, availability of spare parts, and the history of mean time between failures at the particular plant site. Another key factor, the cost of the installation, should be computed only after evaluating the factors listed in the previous sentence. One of the most common flow measurement mistakes is the reversal of this sequence. Instead of selecting a sensor that will perform properly, an attempt is made to justify the use of a device because it is less expensive. The “inexpensive” purchases can result in the most costly installations.

The basis of good flowmeter selection is a clear understanding of the requirements of the particular application. Therefore, time should be invested in fully evaluating the nature of the

process fluid and of the overall installation. The development of specifications that state the application requirements should be a systematic process.

The first step in the flow sensor selection process is to determine whether the flow rate information should be continuous or totalized, and whether this information is needed locally or remotely. If the information is needed remotely, a determination of the transmission method (either analog, digital, or shared) needs to be made. If the transmission method is shared, a decision is needed on the required (minimum) data-update frequency will be. Once these decisions are made, an evaluation is needed to determine the properties and flow characteristics of the process fluid and the piping that will accommodate the flowmeter. In order to approach this task in a systematic manner, forms have been developed, requiring that the following types of data be filled in for each application:

a. Fluid and flow characteristics. In this section of the table, the name of the fluid is given and its pressure, temperature, allowable pressure drop, density (or specific gravity [SG]), conductivity, viscosity (Newtonian or not?), and vapor pressure at maximum operating temperature are listed, together with an indication of how these properties might vary or interact. In addition, all safety or toxicity information should be provided, together with detailed data on the fluid's composition, presence of bubbles, solids (abrasive or soft, size of particles, fibers), tendency to coat, and light transmission qualities (opaque, translucent, or transparent?).

b. Expected minimum and maximum pressure and temperature values. In addition to the normal operating values these values should be given. Facts that should be stated are whether flow can reverse, whether it does not always fill the pipe, whether slug flow can develop (air-solids-liquid), whether aeration or pulsation is likely, whether sudden temperature changes can occur, or whether special precautions are needed during cleaning and maintenance.

c. Location of piping and flowmeter. Piping placement and the area where the flowmeter is to be located is critical to accurate measurements. For the piping, its direction (avoid downward flow in liquid applications), size, material, schedule, flange-pressure rating, accessibility, up- or downstream turns, valves, regulators, and available straight-pipe run lengths. In connection with the area where the flowmeter is to be placed, the specifying engineer must know if vibration or magnetic fields are present or possible, if electric or pneumatic power is available, if the area is classified for explosion hazards, or if there are other special requirements, such as compliance with sanitary or clean-in-place (CIP) regulations.

The second step in selecting a flow sensor is to determine the required meter range by identifying minimum and maximum flows (mass or volumetric) to be measured. Subsequently, the required flow measurement accuracy is to be determined. Typically, accuracy is specified in percentage of actual reading (%AR), in percentage of CS, or in percentage of FS units. The accuracy requirements should be separately stated at minimum, normal, and maximum flow rates. Unless these requirements are known, meter's performance may not be acceptable over its full range.

5.3 Accuracy Versus Repeatability

In applications where products are sold or purchased based on a meter reading, absolute accuracy is critical. In other applications, repeatability may be more important than absolute accuracy. Therefore, it is advisable to separately establish the accuracy and repeatability requirements of each application and to state the requirements in the specifications.

When a flowmeter's accuracy is stated in % CS or % FS units, its absolute error will rise as the measured flow rate drops. If meter error is stated in %AR, the error in absolute terms stays the same at both high and low flows. Because FS is always a larger quantity than the CS, a sensor with a % FS performance will always have a larger error than one with the same % CS specification. Therefore, in order to compare all flowmeter bids fairly, it is advisable to convert all quoted error statements into the same %AR units.

It is also recommended that the user compare installations based on the total error of the loop. For example, the inaccuracy of an orifice plate is stated in %AR, while the error of the associated D/P cell is in % CS or % FS. Similarly, the inaccuracy of a Coriolis meter is the sum of two errors, one given in %AR, and the other given as a % FS value. Total inaccuracy is calculated by taking the square root of the sum of the squares of the component inaccuracies at the desired flow rates.

In well-prepared flowmeter specifications, all accuracy statements are converted into uniform %AR units and these %AR requirements are specified separately for minimum, normal, and maximum flows. All flowmeter specifications and bids should clearly state both the accuracy and the repeatability of the meter at minimum, normal, and maximum flows.

Table 5-1 provides data on the range of Reynolds numbers (R_e or R_D) within which the various flowmeter designs can operate. In selecting the right flowmeter, one of the first steps is to determine both the minimum and the maximum Reynolds numbers for the application. Maximum R_D is obtained by making the calculation when flow and density are at their maximum values and viscosity is at its minimum value. Conversely, the minimum R_D is obtained by using minimum flow, minimum density, and maximum viscosity.

If acceptable metering performance can be obtained from two different flowmeter categories and one has no moving parts, select the one without moving parts. Moving parts are a potential source of problems, not only for the obvious reasons of wear, lubrication, and sensitivity to coating, but also because moving parts require clearance spaces that sometimes introduce "slippage" into the flow being measured. Even with well-maintained and calibrated meters, this unmeasured flow varies with changes in fluid viscosity and temperature. Changes in temperature also change the internal dimensions of the meter, thereby requiring compensation.

Furthermore, if one can obtain the same performance from both a full flowmeter and a point sensor, it is generally advisable to use the flowmeter. Because point sensors do not examine the full flow, they read accurately only if they are inserted to a depth where the flow velocity is the average of the velocity profile across the pipe. Even if this depth is carefully determined at the time of calibration, it is likely to be altered because velocity profiles change with flow rate, viscosity, temperature, and other factors.

If all other considerations are the same, it is advisable to select the design that offers the least pressure loss. Part of the reason is that the pressure loss will cause higher pump or compressor operating costs over the life of the plant. Another reason is that a pressure restriction

in the flow path causes a drop in pressure; also, the pipe restriction will become a potential site for material build-up, plugging, or cavitation.

Before specifying a flowmeter, it is also advisable to determine whether the flow information will be more useful if presented in mass or volumetric units. When measuring the flow of compressible materials, volumetric flow is not very meaningful unless density (and sometimes viscosity) is constant. When the velocity (volumetric flow) of incompressible liquids is measured, the presence of suspended bubbles will cause errors; therefore, air and gas must be removed before the fluid reaches the meter. In other velocity sensors, pipe liners can cause problems (ultrasonic), or the meter may stop functioning if the Reynolds number is too low (in vortex shedding meters, $R_D > 20{,}000$ is required).

In view of the above considerations, consideration should be given to mass flowmeters that are insensitive to density, pressure, and viscosity variations and not affected by changes in the Reynolds number. Also underutilized in the chemical industry are the various flumes that can measure flow in partially full pipes and can pass large floating or settleable solids.

5.4 Differential Pressure Flowmeters

The calculation of fluid flow rate by reading the pressure loss across a pipe restriction is perhaps the most commonly used flow measurement technique in industrial applications (Figure 5-7). The pressure drops generated by a wide variety of geometrical restrictions have been well characterized over the years, and, as compared in Table 5-2, these primary or "head" flow elements come in a wide variety of configurations, each with specific application strengths and weaknesses. Discussed later in this chapter are variations on the theme of D/P flow measurement, including the use of Pitot tubes and variable-area meters (rotameters).

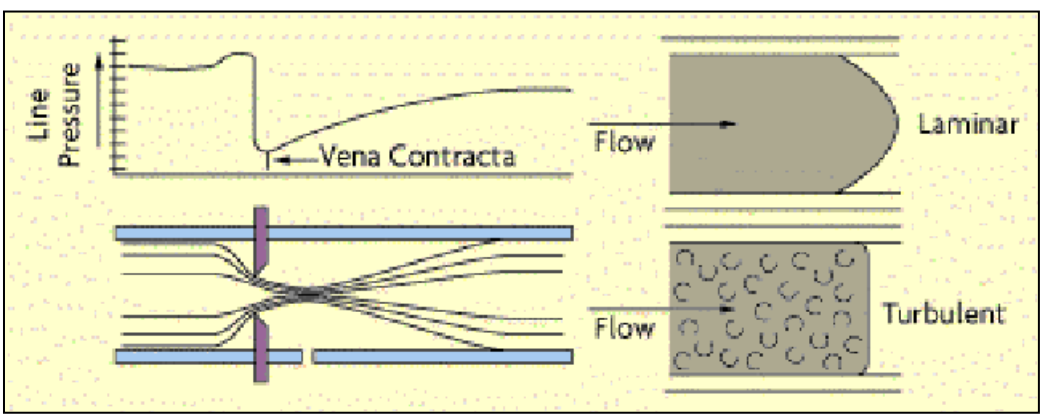

Figure 5-7. Pressure Drop Flow Measurement

5.4.1 Primary element options

The relationship between static and kinetic energy in a flowing stream was first established by Bernoulli in the 18th century. As a fluid passes through a restriction, it accelerates, and the energy for this acceleration is obtained from the fluid's static pressure. Consequently, the line pressure drops at the point of constriction. Part of the pressure drop is recovered as the flow returns to the unrestricted pipe. The pressure differential (h) developed by the flow element is measured and then used to calculate the velocity (V), the volumetric flow (Q) and the mass flow (W) using the following generalized formulas:

$$V = k\sqrt{\left(\frac{h}{D}\right)}$$

Eqn. 5-3

$$Q = kA\sqrt{\frac{h}{D}}$$

Eqn. 5-4

$$W = kA\sqrt{hD}$$

Eqn. 5-5

where k is the discharge coefficient of the element;
A is the cross-sectional area of the pipe's opening;
D is the density of the flowing fluid .

The discharge coefficient k is influenced by the Reynolds number and by the beta ratio, which is the ratio of the bore diameter of the flow restriction to the inside diameter (ID) of the pipe.

Additional parameters or correction factors can be used in the derivation of k, depending on the type of flow element used. These parameters can be computed from equations or read from graphs and tables available from ANSI, the American Petroleum Institute (API), the American Society of Mechanical Engineers (ASME), and the American Gas Association (AGA). The parameters are addressed in many of the references listed in Appendix A.

The discharge coefficients of primary elements are determined by laboratory tests that reproduce the geometry of the installation. Published values generally represent the average value for that geometry over a minimum of 30 calibration runs. The uncertainties of these published values vary from 0.5% to 3%. By using such published discharge coefficients, it is possible to obtain reasonably accurate flow measurements without in-place calibration. In-place calibration is required if testing laboratories are not available or if better accuracy is desired than that provided by the uncertainty range noted above. The relationship between flow and pressure drop varies with the velocity profile, which can be laminar or turbulent as a function of the Reynolds number (R_e), which for liquid flows can be calculated using the relationship:

$$R_e = \frac{3160(SG)}{(ID)\mu}$$

Eqn. 5-6

where ID is the inside diameter of the pipe in inches;
Q is the volumetric liquid flow in gallons/minute;
SG is the fluid-specific gravity at 60°F;
μ is the viscosity in centipoise.

At low Reynolds numbers (generally under $R_e = 2000$), the flow is laminar and the velocity profile is parabolic. At high Reynolds numbers (well over $R_e = 3000$), the flow becomes fully turbulent, and the resulting mixing action produces a uniform axial velocity across

the pipe. The transition between laminar and turbulent flows can cover a wide range of Reynolds numbers; the relationship with the discharge coefficient is a function of the particular primary element.

Today, many engineering societies and organizations and most primary element manufacturers offer software packages for sizing D/P flow elements. These software packages include the required data from graphs, charts, and tables as well as empirical equations for flow coefficients and correction factors. Some programs include data on the physical properties of many common fluids. The user can simply enter the application data and automatically find the recommended size, although these results should be checked for reasonableness by hand calculation.

Table 5-3. Element Comparisons

PRIMARY ELEMENT	RECOMMENDED SERVICE	MINIMUM RE LIMITS	SIZES	ADVANTAGES	LIMITATIONS
Square edge concentric orifice plate	Clean liquids, gases, steam	≥ 2000	≥ 1/2 in	Easy to install Low cost Easy to replace	Relaxation piping requirements High head loss Accuracy affected by installation and orifice condition
Conical/quadrant edge concentric orifice plate	Viscous liquids	≥500	1 to 6 in	Easy to install Low cost Easy to replace	Relaxation piping requirements High head loss Accuracy affected by installation and orifice condition
Eccentric/segmental orifice plate	Liquids and gases containing secondary fluid phases	>10,000	4 to 14 in	Easy to install Low cost Easy to replace	Relaxation piping requirements High head loss Accuracy affected by installation and orifice condition Higher uncertainties of discharge coefficient data
Integral orifice	Clean liquids, gases, steam	>10,000	1/2 to 2 in	Easy to install No lead lines Low cost	Relaxation piping requirements Proprietary design requires calibration High head loss More prone to clogging than standard orifice plate
Venturi/flowtube	Clean & dirty liquids, gases, steam; slurries	>75,000	1/2 to 72 in	Low head loss 2 to 9 times less relaxation piping than orifice Higher flow capacity than orifice for the same differential pressure Accuracy less affected by wear and installation conditions than orifice	High initial cost
Nozzle	Clean liquids, gases, steam	>50,000	>2 in	Higher flow capacity than orifice for the same differential pressure Accuracy less affected by wear and installation conditions than orifice Good for high temperature and high velocity applications Mass transfer standard for gases	Harder to replace than orifice High head loss
Segmental wedge	Dirty liquids, gases, steam; slurries; viscous liquids	>500	≥1/2 in	No lead lines Minimal clogging potential 40% less head loss than orifice Minimal relaxation piping	Proprietary design needs calibration High initial cost Requires remote seal differential pressure transmitter, harder to zero
Venturi cone	Clean & dirty liquids, gases, steam; viscous liquids	None cited	1 to 16 in	Minimal relaxation piping Low flow capability	Proprietary design

5.4.2 Accuracy and rangeability

The performance of a head-type flowmeter installation is a function of the precision of the flow element and the accuracy of the D/P cell. Flow element precision is typically reported as %AR terms, whereas D/P cell accuracy is reported as a percentage of CS. A D/P cell usually provides accuracy of ±0.2% of the CS. This means that at the low end of a 10:1 flow range (at 10% flow), corresponding to a D/P range of 100:1, the flowmeter would have an error of ±20%AR. For this reason, differential producing flowmeters have historically been limited to use within a 3:1 or 4:1 range.

Flowmeter rangeability can be further increased without adverse effect on accuracy by operating several D/P flowmeters in parallel runs. The number of runs opened at a time should be limited to the number of runs needed to keep the flow in the active ones at around 75-90% of range. Another option is to stack two or more transmitters in parallel onto the same element, one for 1-10%, the other for 10-100% of FS D/P produced. Both of these techniques are cumbersome and expensive. Intelligent transmitters offer a better option.

The accuracy of intelligent transmitters is usually stated as ±0.1% CS, which includes only errors due to hysteresis, rangeability, and linearity. Potential errors due to drift, temperature, humidity, vibration, overrange, RF interference, and power supply variation are all excluded. If one includes them, inaccuracy is about 0.2% CS. Because intelligent D/P transmitters can (based on their own measurements) automatically switch ranges between two CSs (one for 1-10%, the other for 10-100% of FS D/P), it should be possible to obtain orifice installations with 1%AR inaccuracy over a 10:1 flow range.

In most flowmetering applications, density is not measured directly; instead, density is assumed to have some normal value. If density deviates from the assumed value, an error results. Density error can be corrected if the density is measured directly or indirectly by measuring pressure in gases or temperature in liquids. Flow computing packages are also available that accept the inputs from the D/P transmitter and other sensors, and can simultaneously calculate mass and volumetric flow.

To minimize error (and the need for density correction) when dealing with compressible fluids, the ratio of D/P (h) divided by upstream pressure (P) should not exceed 0.25 (measured in the same engineering units).

Metering errors due to incorrect installation of the primary element can be substantial (up to 10%). Causes of such errors can be the condition of the mating pipe sections, insufficient straight pipe runs, and pressure tap and lead line design errors.

Under turbulent flow conditions, as much as 10% of the D/P signal can be noise caused by disturbances from valves and fittings located either upstream or downstream of the element, and by the element itself. In the majority of applications, the damping provided in D/P cells is sufficient to filter out the noise. Severe noise can be reduced by using two or more pressure taps connected in parallel on both sides of the D/P cell.

Pulsating flow can be caused by reciprocating pumps or compressors. This pulsation can be reduced by moving the flowmeter away from the source of the pulse, or downstream of filters or other dampening devices. Pulsation dampening hardware can also be installed at the pressure taps, or dampening software can be applied to the D/P cell output signal. One such filter is the inverse derivative algorithm, which blocks any rate of change occurring more quickly than the rate at which the process flow can change.

5.4.3 Piping, installation, and maintenance

Installation guidelines are published by various professional organizations (such as the Instrumentation, Systems, and Automation Society [ISA], ANSI, API, ASME, and AGA) and by manufacturers of proprietary designs. These guidelines include recommendations as shown below.

a. If the process temperature or pressure is to be measured in addition to measuring the flow, the pressure transmitter should not be installed in the process pipe; rather, it should be connected to the appropriate lead line of the flow element via a tee.

b. Similarly, the thermowell used for temperature measurement should be installed at least 10 diameters downstream of the flow element to prevent velocity profile distortions.

c. Welds should be ground smooth and gaskets trimmed so that no protrusion can be detected by physical inspection.

d. In order for the velocity profile to fully develop (and the pressure drop to be predictable), straight pipe runs are required both upstream and downstream of the D/P element. The amount of straight run required depends on both the beta ratio of the installation and on the nature of the upstream components in the pipeline. For example, when a single 90° elbow precedes an orifice plate, the straight-pipe requirement ranges from 6 to 20 pipe diameters as the diameter ratio is increased from 0.2 to 0.8.

e. In order to reduce the straight run requirement, flow straighteners, such as tube bundles, perforated plates, or internal tabs, can be installed upstream of the primary element (Figure 5-8).

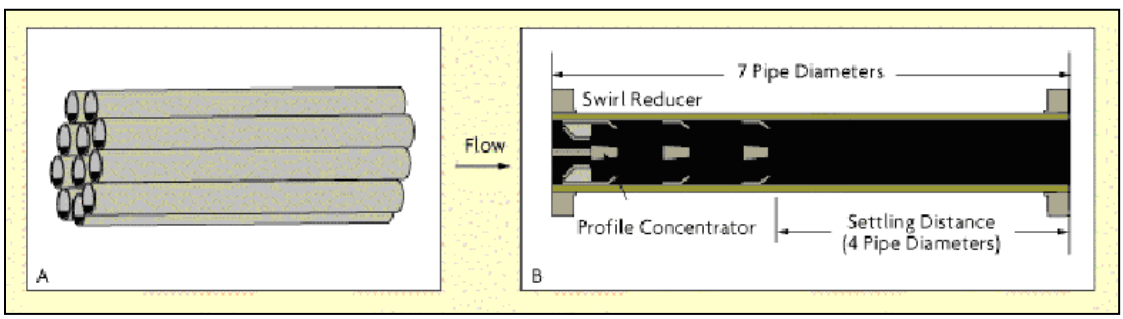

Figure 5-8. Flow Straighteners

The size and orientation of the pressure taps are functions of both the pipe size and the type of process fluid (Figure 5-9). The recommended maximum diameter of pressure tap holes through the pipe or flange is shown below. Both taps should be of the same diameter, and where the hole breaks through the inside pipe surface, it should be square with no roughness, burrs, or wire edges. Connections to pressure holes should be made by nipples, couplings, or adaptors welded to the outside surface of the pipe.

Pipe size	Maximum diameter of pressure tap holes
Less than 2”	¼”
2 and 3”	3/8”
4 to 8”	½”
Greater than 8”	¾”

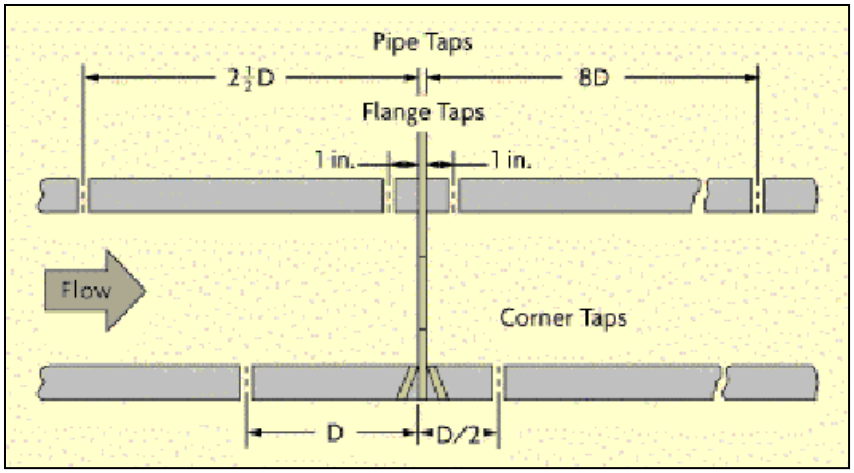

Figure 5-9. Differential Pressure Tap

On services where the process fluid can plug the pressure taps or might gel or freeze in the lead lines, chemical seal protectors can be used. Connection sizes are usually larger (seal elements can also be provided with diaphragm extensions), and because of the space requirement they are usually installed at “radius tap” or “pipe tap” locations. When chemical seals are used, it is important that the two connecting capillaries experience the same temperature and are shielded from sunlight; this is because the capillaries are routed to the D/P cell.

The D/P transmitter should be located as close to the primary element as possible. Lead lines should be as short as possible and have the same diameter. In clean liquid service, the minimum diameter is G measured in inches, while in condensable vapor service, the minimum diameter is 0.4”. In steam service, the horizontal lead lines should be kept as short as possible and be tilted (with a minimum gradient of 1”/ft with respect to the piping) towards the tap, so that the condensate can drain back into the pipe. Again, both lead lines should be exposed to the same ambient conditions and be shielded from sunlight. In clean liquid or gas service, the lead lines can be purged through the D/P cell vent or drain-connections, and they should be flushed for several minutes to remove all air from the lines. Entrapped air can offset the zero calibration.

Seal pots are on the wet leg in D/P cell installations with small ranges (under 10 inH_2O) in order to minimize the level variation in the legs. In steam applications, use of filling tees is recommended to ensure equal height condensate legs on both sides of the D/P cell. If for some reason the two legs are not of equal height, the D/P cell can be biased to zero out the difference, as long as that difference does not change.

If the process temperature exceeds the maximum temperature limitation of the D/P cell, either chemical seals have to be used or the lead lines need to be long enough to cool the fluid. If a large temperature drop is required, a coiled section of tubing (pigtail) can be installed in the lead lines to cool the process fluids.

The frequency of inspection or replacement of a primary element depends on the erosive and corrosive nature of the process and on the overall accuracy requirement. If there is no previous experience, the orifice plate can be removed for inspection during the first three, six, and 12 months of its operation. Based on visual inspection of the plate, a reasonable maintenance cycle can be extrapolated from the findings. Orifices used for material balance calculations should be on the same maintenance cycle.

5.4.4 Sizing the orifice plate

The orifice plate is commonly used in clean liquid, gas, and steam service. It is available for all pipe sizes, and if the pressure drop required is easy to accomplish, it is very cost-effective for measuring flows in larger pipes (over 6” in diameter). The orifice plate is also approved by many standards organizations for the custody-transfer of liquids and gases.

The orifice flow equations used today still differ from one another, although the various standards organizations are working to adopt a single, universally accepted orifice flow equation. Orifice sizing programs usually offer the user with several flow equations from which to choose.

The orifice plate can be made of any material, although stainless steel is the most common. The thickness of the plate used (1/8-1/2”) is a function of the line size, the process temperature, the pressure, and the D/P. The traditional orifice is a thin circular plate (with a tab for handling and for data), inserted into the pipeline between the two flanges of an orifice union. This method of installation is cost-effective, but it requires a process shutdown whenever the plate is removed for maintenance or inspection. In contrast, an orifice fitting allows the orifice to be removed from the process without depressurizing the line and shutting down flow. In such fittings, the universal orifice plate, a circular plate with no tab, is used (see Figure 5-10).

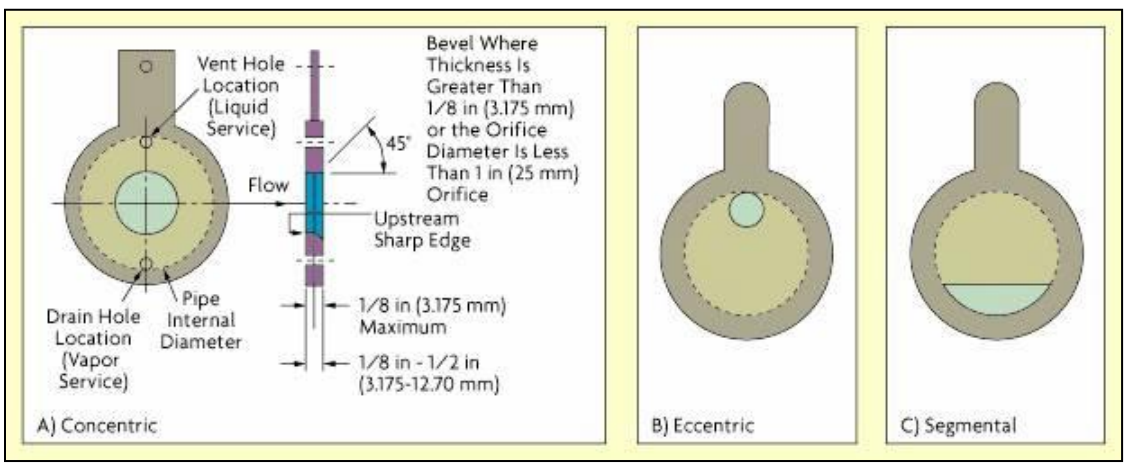

Figure 5-10. Orifices

The concentric orifice plate has a sharp, square-edged concentric bore that provides an almost pure line contact between the plate and the fluid, with negligible friction drag at the boundary. The beta (or diameter) ratios of concentric orifice plates range from 0.25 to 0.75. The point of maximum velocity and minimum static pressure occurs approximately 0.35 to 0.85 pipe diameters downstream from the orifice plate. That point is called the vena contracta. Measuring the D/P at a location close to the orifice plate minimizes the effect of pipe roughness, since friction has an effect on the fluid and the pipe wall.

Flange taps are predominantly used in the United States and are located 1” from the orifice plate’s surfaces. Flange taps are not recommended for use on pipelines less than 2” in diameter. Corner taps are predominant in Europe for all sizes of pipe, and are used in the US for pipes under 2”. With corner taps, the relatively small clearances represent a potential maintenance problem. Vena contracta taps, which are close to the radius taps, are located one pipe diameter upstream from the plate and downstream at the point of vena contracta. This location varies with beta ratio and Reynolds number from 0.35D to 0.8D.

The vena contracta taps provide the maximum pressure differential, but they also produce the most noise. Additionally, if the plate is changed, it may require a change in the tap location. In small pipes, the vena contracta might lie under a flange. Therefore, vena contracta taps are normally used only in pipe sizes exceeding six inches.

Radius taps are similar to vena contracta taps, except the downstream tap is fixed at 0.5D from the orifice plate. Pipe taps are located 2.5 pipe diameters upstream and 8 diameters downstream from the orifice. Radius taps detect the smallest pressure difference and, because of the tap distance from the orifice, the effects of pipe roughness, dimensional inconsistencies, and therefore measurement errors, are the largest.

5.4.5 Orifice types and selection

The concentric orifice plate is recommended for clean liquids, gases, and steam flows when Reynolds numbers range from 20,000 to 10^7 in pipes under six inches. Because the basic orifice flow equations assume that flow velocities are well below sonic, a different theoretical and computational approach is required if sonic velocities are expected. The minimum recommended Reynolds number for flow through an orifice varies with the beta ratio of the orifice and with the pipe size. As pipe sizes increase, the minimum Reynolds number increases as well.

Because of this minimum Reynolds number consideration, square-edged orifices are seldom used on viscous fluids (Figure 5-11). Quadrant-edged and conical orifice plates are recommended when the Reynolds number is under 10,000. Flange taps, corner, and radius taps can all be used with quadrant-edged orifices, but only corner taps should be used with a conical orifice.

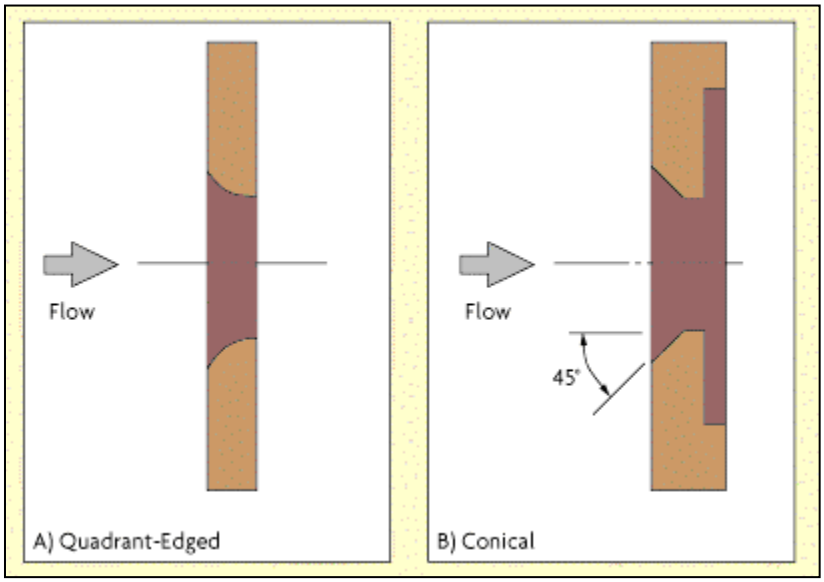

Figure 5-11. Orifices for Viscous Flows

Concentric orifice plates can be provided with drain holes to prevent buildup of entrained liquids in gas streams, or with vent holes for venting entrained gases from liquids. The unmeasured flow passing through the vent or drain hole is usually less than 1% of the total flow if the hole diameter is less than 10% of the orifice bore. The effectiveness of vent/drain holes is limited, however, because they often become clogged.

Concentric orifice plates are not recommended for multi-phase fluids in horizontal lines because the secondary phase can build up around the upstream edge of the plate. In extreme cases, this can clog the opening or it can change the flow pattern and create a measurement error. Eccentric and segmental orifice plates are better suited for such applications. Concentric orifices are still preferred for multi-phase flows in vertical lines because accumulation of material is less likely and the sizing data for these plates is more reliable.

The eccentric orifice is similar to the concentric except that the opening is offset from the pipe's centerline. The opening of the segmental orifice is a segment of a circle. If the secondary phase is a gas, the opening of an eccentric orifice will be located towards the top of the pipe. If the secondary phase is a liquid in a gas or a slurry in a liquid stream, the opening should be at the bottom of the pipe. The drainage area of the segmental orifice is greater than that of the eccentric orifice, and, therefore, it is preferred in applications with high proportions of the secondary phase.

These plates are usually used in pipe sizes exceeding four inches in diameter, and must be carefully installed to make sure that no portion of the flange or gasket interferes with the opening. Flange taps are used with both types of plates, and are located in the quadrant opposite the opening for the eccentric orifice, in line with the maximum dam height for the segmental orifice.

For the measurement of low flow rates, a D/P cell with an integral orifice may be the best choice. In this design, the total process flow passes through the D/P cell, thereby eliminating the need for lead lines. The D/P cells are proprietary devices with little published data on their performance; their flow coefficients are based on actual laboratory calibrations. They are recommended for clean, single-phase fluids only because even small amounts of build-up will create significant measurement errors and/or will clog the unit.

Restriction orifices are installed to remove excess pressure and usually operate at sonic velocities with very small beta ratios. The pressure drop across a single restriction orifice should not exceed 500 PSID (pounds per square inch differential) because of plugging or galling. In multi-element restriction orifice installations, the plates are placed approximately one pipe diameter from each another in order to prevent pressure recovery between the plates.

5.4.6 Orifice performance

Although it is a simple device, the orifice plate is, in principle, a precision instrument. Under ideal conditions, the inaccuracy of an orifice plate can be in the range of 0.75-1.5%AR. Orifice plates are, however, quite sensitive to a variety of error-inducing conditions. Precision in the bore calculations, the quality of the installation, and the condition of the plate itself determine total performance. Installation factors include tap location and condition, condition of the process pipe, adequacy of straight pipe runs, gasket interference, misalignment of pipe and orifice bores, and lead-line design. Other adverse conditions include the dulling of the sharp edge, nicks caused by corrosion or erosion, warping of the plate due to effects from dirt, water hammer, grease, or secondary phase deposits on either orifice surface. Any of the above conditions can change the orifice discharge coefficient by as much as 10%. In combination these problems can be even more worrisome, the net effect of which is unpredictable. Therefore, under average operating conditions, a typical orifice installation can be expected to have an overall inaccuracy in the range of 2 to 5%AR.

The typical custody-transfer grade orifice meter is more accurate because it can be calibrated in a testing laboratory and is provided with honed pipe sections, flow straighteners, senior orifice fittings, and temperature controlled enclosures.

5.5 Venturi Tubes and Flow Tubes

Venturi tubes are available in sizes up to 72", and can pass 25 to 50% more flow than an orifice with the same pressure drop. Furthermore, the total unrecovered head loss rarely exceeds 10% of measured D/P (Figure 5-12). The initial cost of venturi tubes is high, so they are primarily used on larger flows or on more difficult or demanding flow applications. Venturis are insensitive to velocity profile effects and therefore require less straight pipe run than an orifice. Their contoured nature, combined with the self-scouring action of the flow through the tube, makes the device immune to corrosion, erosion, and internal scale buildup. In spite of its high initial cost, the total cost of ownership can still be favorable because of cost savings for installation, operating, and maintenance.

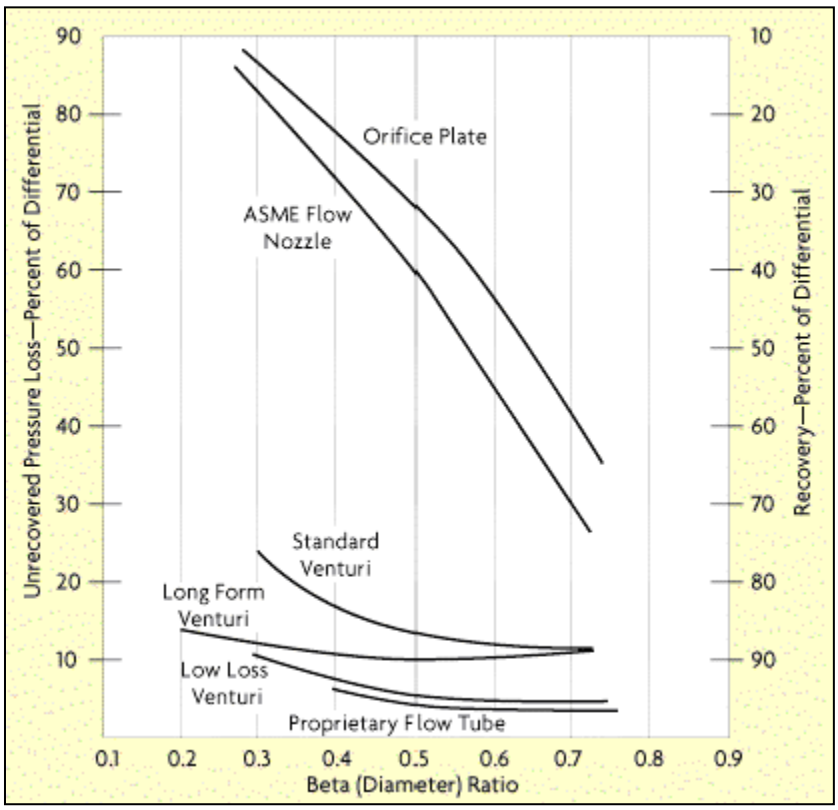

Figure 5-12. Venturi Versus Orifice Pressure Loss

The classical Herschel venturi has a very long flow element characterized by a tapered inlet and a diverging outlet. Inlet pressure is measured at the entrance, and static pressure is measured in the throat section. The pressure taps feed into a common annular chamber, providing an average pressure reading over the entire circumference of the element. The classical venturi is limited in its application to clean, non-corrosive liquids, and gases.

In the short-form venturi (Figure 5-13), the entrance angle is increased and the annular chambers are replaced by pipe taps. The short-form venturi maintains many of the advantages of

the classical venturi, but at a reduced initial cost, shorter length, and reduced weight. Pressure taps are located ¼ to ½ pipe diameter upstream of the inlet cone and in the middle of the throat section. Piezometer rings can be used with large venturi tubes to compensate for velocity profile distortions. In slurry service, the pipe taps can be purged or replaced with chemical seals, which can eliminate all dead-ended cavities.

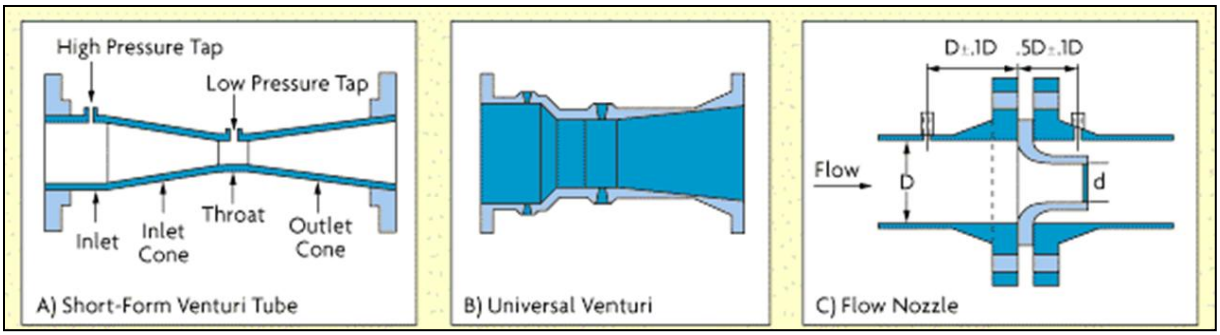

Figure 5-13. Gradual Flow Elements

There are several proprietary flow tube designs that provide even better pressure recovery than the classical venturi. The best known of these proprietary designs is the universal venturi. The various flow tube designs differ in contour, tap location, generated D/P, and in unrecovered head loss. All of these designs have short lay lengths, typically varying between 2 and 4 pipe diameters. These proprietary flow tubes usually cost less than the classical and short-form venturis because of their short lay length; however, they may also require straight pipe runs to condition their flow velocity profiles.

Flow tube performance is much affected by calibration. The inaccuracy of the discharge coefficient in a universal venturi, at Reynolds numbers exceeding 75,000, is 0.5%. The inaccuracy of a classical venturi at Re > 200,000 is between 0.7 and 1.5%. Flow tubes are often supplied with discharge coefficient graphs because the discharge coefficient changes as the Reynolds number drops. The variation in the discharge coefficient of a venturi caused by pipe roughness is less than 1% because there is continuous contact between the fluid and the internal pipe surface.

The high turbulence and the lack of cavities in which material can accumulate make flow tubes well-suited for slurry and sludge services; however, maintenance costs can be high if air purging cannot prevent plugging of the pressure taps and lead lines. Plunger-like devices (vent cleaners) can be installed to periodically remove buildup from interior openings, even while the meter is online. Lead lines can also be replaced with button-type seal elements hydraulically coupled to the D/P transmitter using filled capillaries. Overall measurement accuracy can drop if the chemical seal is small, its diaphragm is stiff, or if the capillary system is not temperature-compensated or not shielded from direct sunlight.

5.5.1 Flow nozzles

The flow nozzle is dimensionally more stable than the orifice plate, particularly in high-temperature and high-velocity services. The flow nozzle has often been used to measure high flow rates of superheated steam. Like the venturi, it has a greater flow capacity than the orifice plate and requires a lower initial investment than a venturi tube; however, it also provides less

pressure recovery. A major disadvantage of the nozzle is that it is more difficult to replace than the orifice unless it can be removed as part of a spool section.

The use of the ASME pipe tap flow nozzle is predominant in the United States. The downstream end of a nozzle is a short tube having the same diameter as the vena contracta of an equivalent orifice plate. The low-beta designs range in diameter ratios from 0.2 to 0.5, while the high beta-ratio designs vary between 0.45 and 0.8. The nozzle should always be centered in the pipe, and the downstream pressure tap should be inside the nozzle exit. The throat taper should always decrease the diameter toward the exit. Flow nozzles are not recommended for slurries or dirty fluids. The most common flow nozzle is the flange type. Taps are commonly located one pipe diameter upstream and ½ pipe diameter downstream from the inlet face.

Flow nozzle accuracy is typically 1%AR, with a potential for 0.25%AR if calibrated. While discharge coefficient data is available for Reynolds numbers as low as 5000, it is advisable to use flow nozzles only when the Reynolds number exceeds 50,000. Flow nozzles maintain their accuracy for long periods, even in difficult service. Flow nozzles can be a highly accurate way to measure gas flows. When the gas velocity reaches the speed of sound in the throat, the velocity cannot increase any more (even if downstream pressure is reduced), and a choked flow condition is reached. Such "critical flow nozzles" are very accurate and often are used in flow laboratories as standards for calibrating other gas flowmetering devices.

Although horizontal orientation is preferred, nozzles can be installed in any position. Vertical downflow is preferred for wet steam, gases, or liquids containing solids. The straight pipe run requirements are similar to those of orifice plates.

5.5.2 Segmental wedge elements

The segmental wedge element is a proprietary device designed for use in slurry, corrosive, erosive, viscous, or high-temperature applications. It is relatively expensive and is used mostly on difficult fluids, where the dramatic savings in maintenance can justify the initial cost. The unique flow restriction is designed to last the life of the installation without deterioration (Figure 5-14).

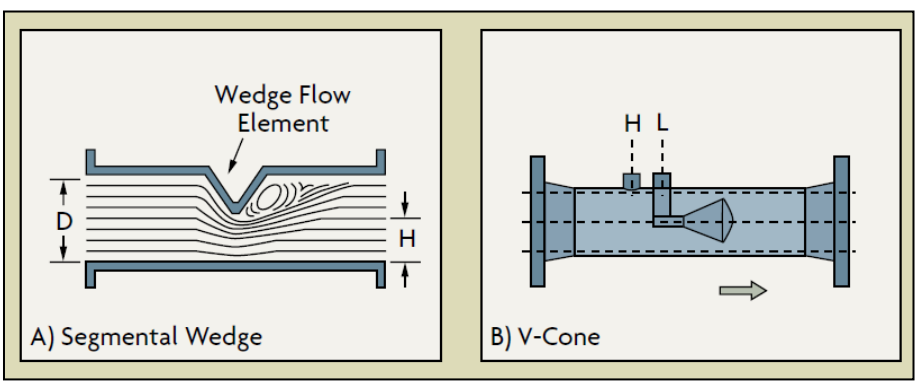

Figure 5-14. Segmental Wedge Element

Wedge elements are used with 3-inch-diameter chemical seals, eliminating both the lead lines and any dead-ended cavities. The seals attach to the meter body immediately upstream and downstream of the restriction. They rarely require cleaning, even in services like dewatered sludge, black liquor, coal slurry, fly ash slurry, taconite, and crude oil. The minimum Reynolds number is only 500, and the meter requires only five diameters of upstream straight pipe run.

The segmental wedge has a V-shaped restriction characterized by the H/D ratio, where H is the height of the opening below the restriction and D is the diameter. The H/D ratio can be varied to match the flow range and to produce the desired D/P. The oncoming flow creates a sweeping action through the meter. This provides a scouring effect on both faces of the restriction, helping to keep it clean and free of buildup. Segmental wedges can measure flow in both directions, but the D/P transmitter must be calibrated for a split range, or the flow element must be provided with two sets of connections for two D/P transmitters (one for forward and one for reverse flow).

An uncalibrated wedge element can be expected to have a 2% to 5%AR inaccuracy over a 3:1 range. A calibrated wedge element can reduce that to 0.5%AR if the fluid density is constant. If slurry density is variable and/or unmeasured, error rises.

5.5.3 Venturi-cone element

The venturi-cone (V-cone) element is another proprietary design that promises consistent performance at low Reynolds numbers and is insensitive to velocity profile distortion and swirl effects. Again, however, it is relatively expensive. The V-cone restriction has a unique geometry that minimizes accuracy degradation due to wear, making it a good choice for high-velocity flows and erosive/corrosive applications.

The V-cone creates a controlled turbulence region that flattens the incoming irregular velocity profile and induces a stable D/P that is sensed by a downstream tap. The beta ratio of a V-cone is so defined that an orifice and a V-cone with equal beta ratios will have equal opening areas, as in the following equation:

$$\boxed{Beta\ Ratio = \frac{\sqrt{(D^2 - d^2)}}{D}} \qquad \text{Eqn. 5-7}$$

where d is the cone diameter;
D is the inside diameter of the pipe.

With this design, the beta ratio can exceed 0.75. For example, a 3” meter with a beta ratio of 0.3 can have a range of 0 to 75 gallons per minute (GPM). Published test results on liquid and gas flows place the system accuracy between 0.25 and 1.2%AR.

5.6 Pitot Tubes

Although the Pitot tube is one of the simplest flow sensors, it is used in a wide range of flow measurement applications, such as air speed for aircraft (see Chapter 3, Signal Sources). In industrial applications, Pitot tubes are used to measure airflow in pipes, ducts, stacks, and liquid flow in pipes, weirs, and open channels. While accuracy and rangeability are relatively low, Pitot tubes are simple, reliable, inexpensive, and suited for a variety of environmental conditions. Pitot tubes can accommodate extremely high temperatures and a wide range of pressures. A sample layout of a Pitot tube is in Figure 5-15.

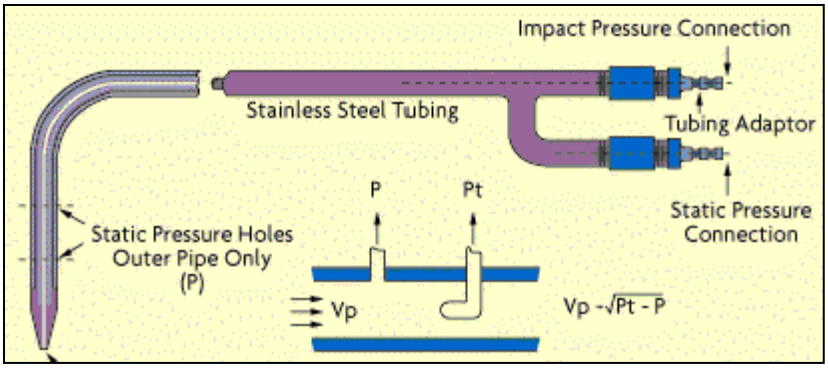

Figure 5-15. Pitot-Static Tubes

The Pitot tube is an inexpensive alternative to an orifice plate. Accuracy varies from 0.5 to 5% FS, which is comparable to that of an orifice. Its flow rangeability of 3:1 (some operate at 4:1) is also similar to the capability of the orifice plate. The main difference is that, while an orifice measures the full flowstream, the Pitot tube detects the flow velocity at only one point in the flowstream. An advantage of the slender Pitot tube is that it can be inserted into existing and pressurized pipelines (called hot-tapping) without requiring a shutdown.

5.6.1 Theory of operation

Pitot tubes were invented by Henri Pitot in 1732 to measure the flowing velocity of fluids. Basically a D/P flowmeter, a Pitot-static tube measures two pressures (the static and the total impact pressure). The static pressure is the operating pressure in the pipe, duct, or the environment, upstream to the Pitot tube. It is measured at right angles to the flow direction, preferably in a low turbulence location. A Pitot tube measures total impact pressure.

The total impact pressure (P_T) is the sum of the static and kinetic pressures and is detected as the flowing stream impacts on the Pitot opening. To measure impact pressure, most Pitot tubes use a small, sometimes L-shaped tube, with the opening directly facing the oncoming flowstream. The point velocity of approach (V_P) can be calculated by taking the square root of the difference between the total pressure (P_T) and the static pressure (P) and multiplying that by the C/D ratio, where C is a dimensional constant and D is density:

$$V_p = \frac{C_p\left(\sqrt{P_T - P}\right)}{D}$$

Eqn. 5-8

When the flow rate is obtained by multiplying the point velocity (V_P) by the cross-sectional area of the pipe or duct, it is critical that the velocity measurement be made at an insertion depth that corresponds to the average velocity. As the flow velocity rises, the velocity profile in the pipe changes from elongated (laminar) to more flat (turbulent). The change in velocity profile changes the point of average velocity, which requires an adjustment of the insertion depth. Pitot tubes are recommended only for highly turbulent flows (Reynolds numbers > 20,000) and, under these conditions, the velocity profile tends to be flat enough so that the insertion depth is not critical.

In 1797, G. B. Venturi developed a short tube with a throat-like passage that increases flow velocity and reduces the permanent pressure drop. Special Pitot designs are available that,

instead of just providing an impact hole for opening, add a single or double venturi to the impact opening of the Pitot tube. The venturi version generates a higher D/P than a regular Pitot tube can generate.

5.6.2 Static pressure measurement

In jacketed (sometimes referred to as dual-walled) Pitot-tube designs, the impact pressure port faces forward into the flow. Conversely, static ports do not face forward into the flow, but are, instead, spaced around the outer tube. Both pressure signals (P_T and P) are routed by tubing to a D/P indicator or transmitter. In industrial applications, the static pressure (P) can be measured in three ways:

a. through taps in the pipe wall;

b. by static probes inserted in the process stream;

c. by small openings located on the Pitot tube or on a separate aerodynamic element.

Wall taps can measure static pressures at flow velocities up to 200 fps. A static probe (resembling an L-shaped Pitot tube) can have four holes of 0.04” in diameter, spaced 90° apart. Aerodynamic bodies can be cylinders or wedges with two or more sensing ports.

Errors in detecting static pressure arise from fluid viscosity, velocity, and fluid compressibility. The key to accurate static pressure detection is to minimize the kinetic component in the pressure measurement.

5.6.3 Single-port Pitot tubes

A single-port Pitot tube can only measure the flow velocity at a single point in the cross-section of a flowing stream. The probe must be inserted to a point in the flowing stream where the flow velocity is the average of the velocities across the cross-section, and its impact port must face directly into the fluid flow. The Pitot tube can be made less sensitive to flow direction if the impact port has an internal bevel of about 15°, extending about 1.5 diameters into the tube. Figure 5-16 provides a sample layout of a Pitot tube installation.

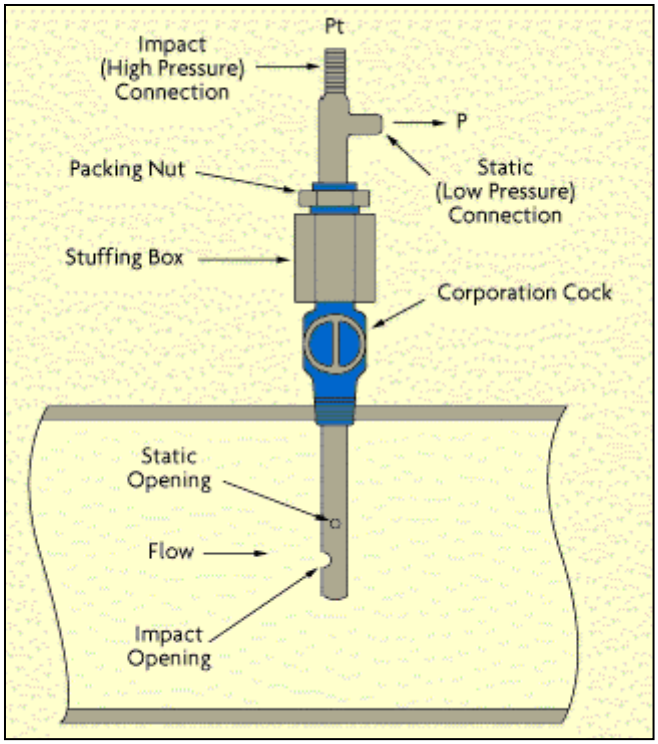

Figure 5-16. Pitot Tube Installation Example

If the pressure differential generated by the venturi is too low for accurate detection, the conventional Pitot tube can be replaced by a Pitot venturi or a double venturi sensor. This replacement action will produce a higher pressure differential.

A calibrated, clean, and properly inserted single-port Pitot tube can provide ±1% of FS flow accuracy over a flow range of 3:1. Also, but with some loss of accuracy, a single-port Pitot tube can even measure over a range of 4:1. Its advantages are low cost, no moving parts, simplicity, and the fact that it causes very little pressure loss in the flowing stream. Its main limitations include the errors resulting from velocity profile changes and/or from plugging of the pressure ports. Pitot tubes are generally used when flow measurements are of secondary importance, when cost is a major concern, and/or when the pipe or duct diameter is large (up to 72” or more).

Specially designed Pitot probes have been developed for use with pulsating flows. One design uses a Pitot probe filled with silicone oil to transmit the process pressures to the D/P cell. At high-frequency pulsating applications, the oil serves as a pulsation dampening and pressure-averaging medium.

Pitot tubes also can be used in square, rectangular, or circular air ducts. Mounting can be by a flange or gland. The tube is usually provided with an external indicator, so that its impact port can be accurately rotated to face directly into the flow. In addition, the tube can be designed for detecting the full velocity profile by making rapid and consistent traverses across the duct.

A Pitot tube also can be used to measure water velocity in open channels, at drops, chutes, or over fall crests. At the low flow velocities, typical of laminar conditions, Pitot tubes are not recommended because it is difficult to find the insertion depth corresponding to the average velocity and because the Pitot element produces such a small pressure differential.

Although the use of a Pitot venturi improves this situation by increasing the pressure differential, it cannot help the problem caused by the elongated velocity profile.

5.6.4 Averaging Pitot tubes

Averaging Pitot tubes have been introduced to overcome the problem of finding the average velocity point (Figure 5-17). An averaging Pitot tube is provided with multiple impact and static pressure ports and is designed to extend across the entire diameter of the pipe. The pressures detected by all the impact pressure ports (and separately by all the static ports) are combined and the square root of the difference between impact and static pressure is measured as an indication of the average flow in the pipe. The port closest to the outlet of the combined signal has a slightly greater influence, than the port that is farthest away; however, for secondary applications where Pitot tubes are commonly used, this error is acceptable.

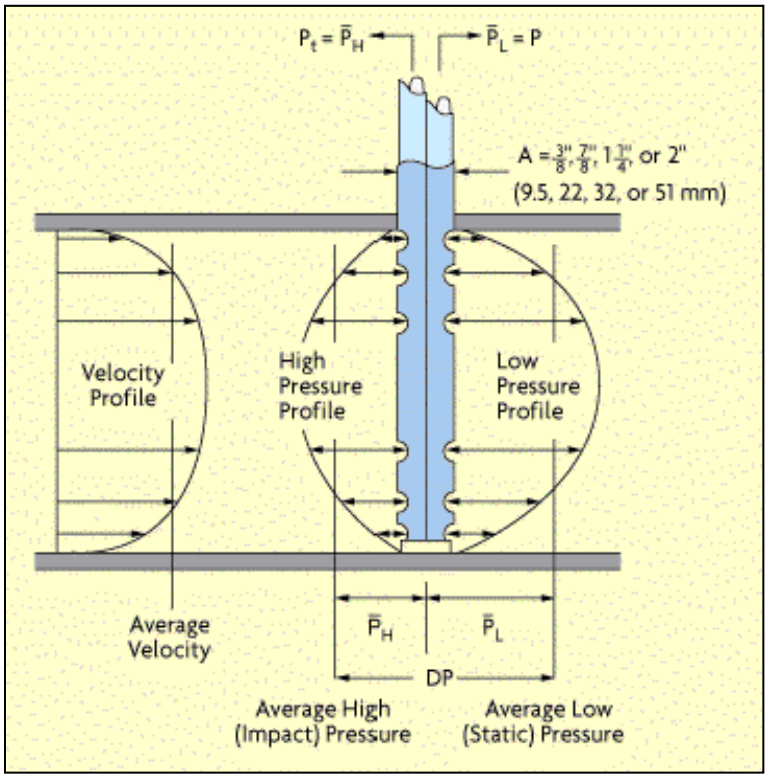

Figure 5-17. Averaging Pitot Tube

The number of impact ports, the distance between ports, and the diameter of the averaging Pitot tube are all attributes that can be modified to match the needs of a particular application. For example, sensing ports in averaging Pitot tubes are often too large to allow the tube to behave as a true averaging chamber because the oversized port openings are not optimized for averaging, but to prevent plugging. In some installations, therefore, purging with an inert gas will keep the ports clean and allow the sensor to use smaller ports.

Averaging Pitot tubes offer the same advantages and disadvantages as do single-port tubes. They are slightly more expensive and a little more accurate, especially if the flow is not fully formed. Some averaging Pitot sensors can be inserted through the same opening (or hot tap) that accommodates a single-port tube.

5.6.5 Area averaging

Area-averaging Pitot stations are used to measure the large flows of low-pressure air in boilers, dryers, or HVAC systems (Figure 5-18). These units are available for the various standard sizes of circular or rectangular ducts and for pipes. They are so designed that each segment of the cross-section is provided with both an impact and a static pressure port. Each set of ports is connected to its own manifold, which combines the average static and average impact pressure signals. If plugging is likely, the manifolds can be purged to keep the ports clean.

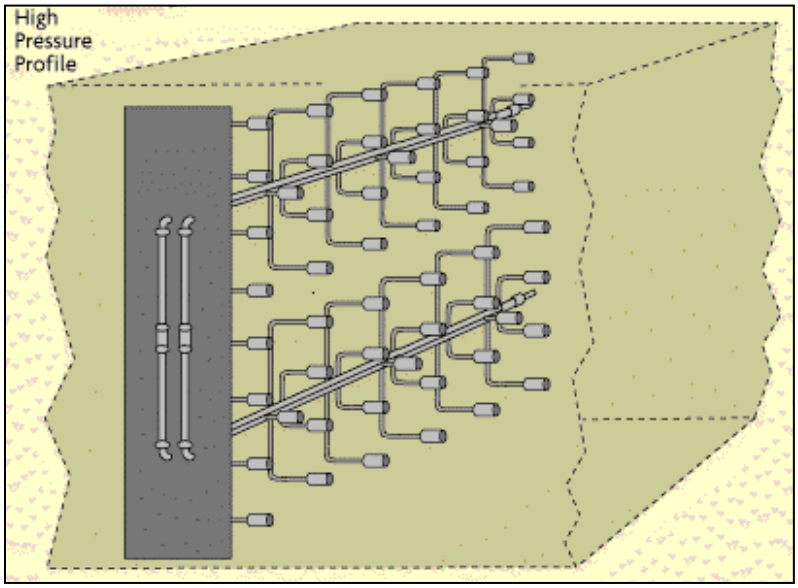

Figure 5-18. Area-Averaging Pitot Tube System

Because area-averaging Pitot stations generate very small pressure differentials, it may be necessary to use low differential D/P cells with spans as low as 0.00-0.01 inH_2O. To improve accuracy, a hexagonal cell-type flow straightener and a flow nozzle can be installed upstream of the area-averaging Pitot flow sensor. The flow straightener removes local turbulence, while the nozzle amplifies the D/P produced by the sensor.

5.6.6 Vibration damage

Natural frequency resonant vibrations can cause Pitot tube failure. Natural frequency vibration is caused by forces created as vortices are shed by the Pitot tube. The Pitot tube is expected to experience such vibration if the process fluid velocity (in fps) is between a lower limit (V_L) and an upper limit (V_H). The values of V_L and V_H can be calculated (for the products of a given manufacturer) using the equations below:

$$V_L = \frac{5253(MP_rD)}{L^2} \qquad \text{Eqn. 5-9}$$

$$V_H = \frac{7879(MP_rD)}{L^2} \qquad \text{Eqn. 5-10}$$

where M = mounting factor (3.52 for single mount);

P_r = probe factor (0.185 for 3/8” diameter probes; 0.269 for ½”; 0.372 for ¾”; and 0.552 for 1”);
D = probe diameter (inches);
L = unsupported probe length in inches; calculated as the sum of the pipe I.D. plus the pipe wall thickness plus: 1.25” for 3/8” diameter probes; 1.5” for ½”; 1.56” for ¾”; and 1.94” for 1” diameter probes.

Once the velocity limits have been calculated, it is important to make sure the operating velocities do not exceed them. If this happens, change is required in the probe diameter and/or its mounting until there is no overlap.

5.7 Variable Area Flowmeters

Variable area flowmeters, used for measuring the flow of liquids, gases, and steam, are simple and versatile devices that operate at a relatively constant pressure drop (Figure 5-19). The position of their float, piston, or vane is changed as the increasing flow rate opens a larger flow area to pass the flowing fluid. The position of the float, piston, or vane provides a direct visual indication of flow rate. Design variations include the rotameter (a float in a tapered tube), orifice/rotameter combination (bypass rotameter), open-channel variable gate, tapered plug, and vane or piston designs.

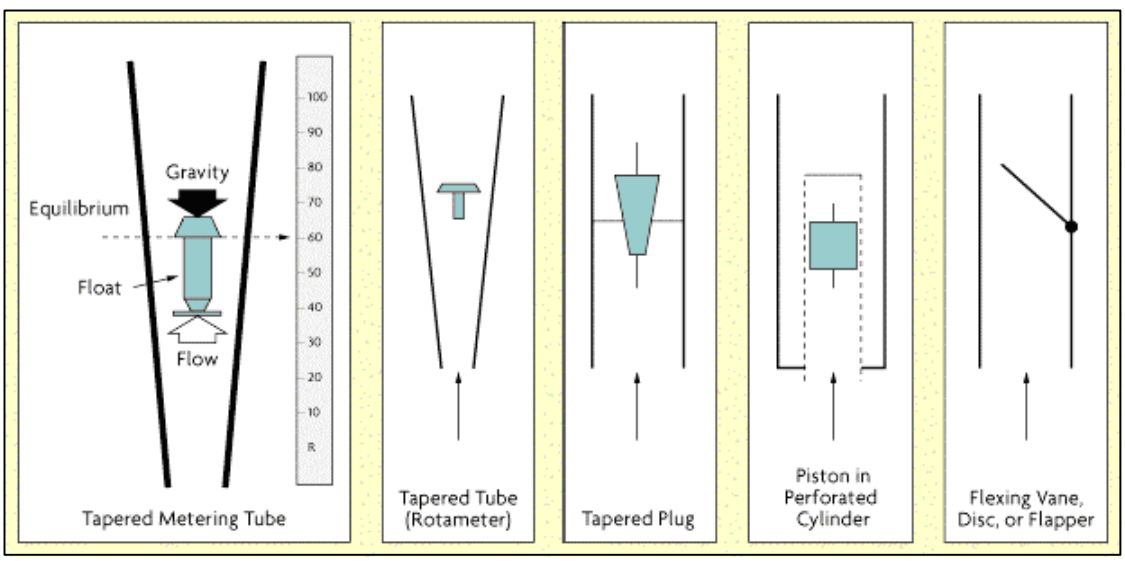

Figure 5-19. Variable Area Flowmeters

Either the force of gravity or a spring is used to return the flow element to its resting position when the flow lessens. Gravity-operated meters (rotameters) must be installed in a vertical position, whereas spring operated ones can be mounted in any position. All variable area flowmeters are available with local indicators. Most can also be provided with position sensors and transmitters (pneumatic, electronic, digital, or fiber optic) for connecting to remote displays or controls.

5.7.1 Purge-flow regulators

If a needle valve is placed at the inlet or outlet of a rotameter and a D/P regulator controls the pressure difference across this combination, the result is a purge-flow regulator. Such

instrumentation packages are used as self-contained purge flowmeters and are among the least expensive and most widely used flowmeters. Their main application is to control small gas or liquid purge streams. They are used to protect instruments from contacting hot and corrosive fluids, to protect pressure taps from plugging, to protect the cleanliness of optical devices, and to protect electrical devices from igniting upon contact with combustibles.

Purge meters are quite useful in adding nitrogen gas to the vapor spaces of tanks and other equipment. Purging with nitrogen gas reduces the possibility of developing a flammable mixture because it displaces flammable gases. The purge-flow regulator is reliable, intrinsically safe, and inexpensive.

Purge meters can operate in the constant flow mode, where $P_i - P_o$ is held constant at about 60 to 80 inH_2O differential. In bubbler and purge applications, the inlet pressure (P_1) is held constant and the outlet pressure (P_0) is variable. Figure 5-20 describes a configuration where P_0 is held constant and P_1 is variable.

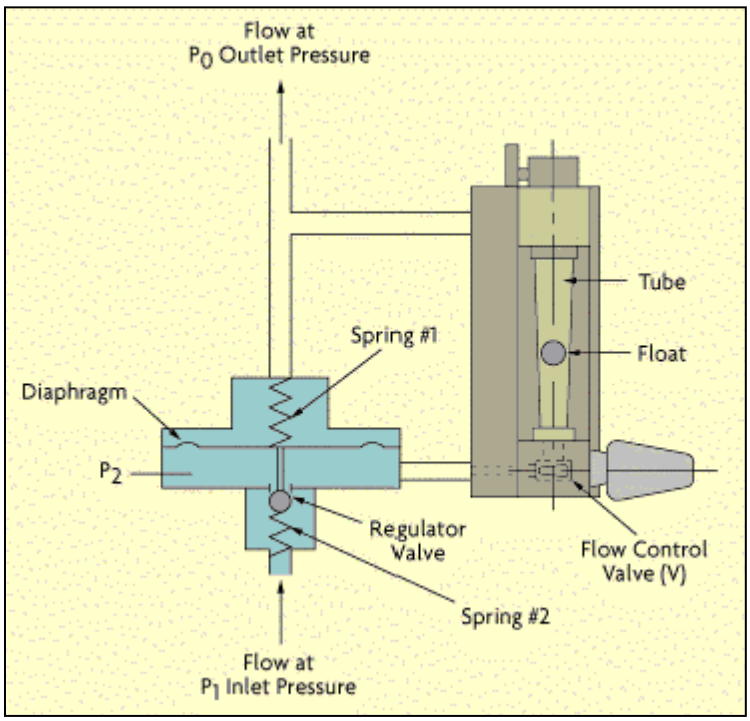

Figure 5-20. Purge Flowmeter Design

Purge meters can handle extremely small flow rates from 0.01 cc/min for liquids and from 0.5 cc/min for gases. The most common size is a glass tube rotameter with 0.24" (6 mm) connections and a range of 0.05-0.5 GPM (0.2-2.0 liters per minute) on water or 0.2-2.0 standard cubic feet per minute (SCFM) (0.3-3.0 cubic meters per hour) in air service. Typical accuracy is ±5% FS over a 10:1 range. The most common pressure rating is 150 pounds per square inch gage (PSIG), equal to 1 megapascal.

5.7.2 Rotameters (tapered tube)

The rotameter is the most widely used variable area flowmeter because of its low cost, simplicity, low pressure drop, relatively wide rangeability, and linear output. Its operation is simple; in order to pass through the tapered tube, the fluid flow raises the float. The greater the

flow, the higher the float rises. In liquid service, the float rises due to a combination of the buoyancy of the liquid and the velocity head of the fluid. With gases, buoyancy is negligible, and the float responds mostly to the velocity head.

In a rotameter, the metering tube is mounted vertically, with the small end at the bottom. The fluid to be measured enters at the bottom of the tube, passes upward around the float, and exits the top. When no flow exists, the float rests at the bottom. When fluid enters, the metering float begins to rise.

The float moves up and down in proportion to the fluid flow rate and the annular area between the float and the tube wall. As the float rises, the size of the annular opening increases and causes the D/P across the float to decrease. The float reaches a stable position when the upward force exerted by the flowing fluid equals the weight of the float. Every float position corresponds to a particular flow rate for a particular fluid's density and viscosity. For this reason, it is necessary to size the rotameter for each application. When sized correctly, the flow rate can be determined by matching the float position to a calibrated scale on the outside of the rotameter. Many rotameters come with a built-in valve for adjusting the flow manually.

Several shapes of float are available for various applications. One early design had slots, which caused the float to spin for stabilizing and centering purposes. Because this float rotated, the term rotameter was coined.

Rotameters are typically provided with calibration data and a direct reading scale for air or water (or both). To size a rotameter for other service, one must first convert the actual flow to a standard flow. For liquids, this standard flow is the water equivalent in GPM; for gases, the standard flow is the airflow equivalent in SCFM. Tables listing standard water equivalent GPM and/or air SCFM values are provided by rotameter manufacturers. Manufacturers also often provide slide rules, nomographs, or computer software for rotameter sizing.

5.7.3 Design Variations

A wide choice of materials is available for floats, packing, O-rings, and end fittings. Rotameter tubes for such safe applications as air or water can be made of glass, whereas if breakage would create an unsafe condition, they are provided with metal tubes. Glass tubes are most common, being precision formed of safety shielded borosilicate glass.

Floats typically are machined from glass, plastic, metal, or stainless steel for corrosion resistance. Other float materials include carboloy, sapphire, and tantalum. End fittings are available in metal or plastic. Some fluids attack the glass metering tube, such as wet steam or high-pH water over 194°F (which can soften glass); caustic soda (which dissolves glass); and hydrofluoric acid (which etches glass).

Floats have a sharp edge at the point where the reading should be observed on the tube-mounted scale. For improved reading accuracy, a glass-tube rotameter should be installed at eye level. The scale can be calibrated for direct reading (air or water) or for reading as a percentage of range. In general, glass tube rotameters can measure flows up to about 60 GPM water and 200 standard cubic feet per hour air.

A correlation rotameter has a scale from which a reading is taken. This reading is then compared to a correlation table for a given gas or liquid to get the actual flow in engineering units. Correlation charts are readily available for nitrogen, oxygen, hydrogen, helium, argon, and carbon dioxide. While not nearly as convenient as a direct reading device, a correlation meter is

more accurate. This is because a direct-reading device is accurate for only one specific gas or liquid at a particular temperature and pressure. A correlation flowmeter can be used with a wide variety of fluids and gases under various conditions. In the same tube, different flow rates can be handled by using different floats.

Small glass tube rotameters are suitable for working with pressures up to 500 PSIG, but the maximum operating pressure of a large (2-in diameter) tube may be as low as 100 PSIG. The practical temperature limit is about 400°F, but such high-temperature operation substantially reduces the operating pressure of the tube. In general, there is a linear relationship between operating temperature and pressure.

Glass-tube rotameters are often used in applications where several streams of gases or liquids are being metered at the same time or mixed in a manifold, or where a single fluid is being exhausted through several channels (Figure 5-21). Multiple tube flowmeters allow up to six rotameters to be mounted in the same frame.

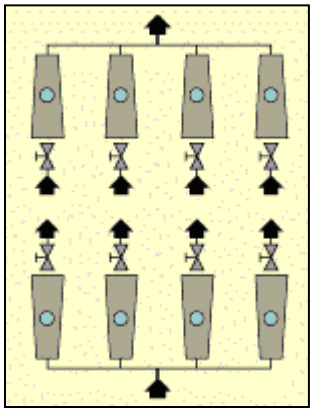

Figure 5-21. Manifold Configuration

It also is possible to operate a rotameter in a vacuum. If the rotameter has a valve, it must be placed at the outlet at the top of the meter. For applications requiring a wide measurement range, a dual-ball rotameter can be used. This instrument has two ball floats: a light ball (typically black) for indicating low flows and a heavy ball (usually white) for indicating high flows. The black ball is read until it goes off scale, and then the white ball is read. One such instrument has a black measuring range from 235-2350 millimeters per minute (ml/min) and a white to 5000 ml/min.

For higher pressures and temperatures beyond the practical range of glass, metal-tube rotameters can be used. These tubes are usually made of stainless steel, and the position of the float is detected by magnetic followers with readouts outside the metering tube.

Metal-tube rotameters can be used for hot and strong alkalis, fluorine, hydrofluoric acid, hot water, steam, slurries, sour gas, additives, and molten metals. They also can be used in applications where high operating pressures, water hammer, or other forces could damage glass tubes. Metal-tube rotameters are available in diameter sizes up to 4”, can operate at pressures up to 750 PSIG, temperatures to 540°C (1000°F), and can measure flows up to 4000 GPM of water or 1300 SCFM of air. Metal-tube rotameters are readily available as flow transmitters for integration with remote analog or digital controls. Transmitters usually detect the float position through magnetic coupling and are often provided with external indication through a rotatable

magnetic helix that moves the pointer. The transmitter can be intrinsically safe, microprocessor-based, and can be provided with alarms and a pulse output for totalization.

Plastic-tube rotameters are relatively low in cost and are ideal for applications involving corrosive fluids or deionized water. The tube itself can be made from Teflon® perfluoroalkoxy (PFA), polysulfone, or polyamide. The wetted parts can be made from stainless steel, polyvinylidene diflouride (PVDF), Teflon®, Teflon® PFA, or Kel-F, with Viton® or Kalrez® O-rings.

5.7.4 Accuracy

Laboratory rotameters can be calibrated to an accuracy of 0.50%AR over a 4:1 range, while the inaccuracy of industrial rotameters is typically 1-2% FS over a 10:1 range. Purge and bypass rotameter errors are in the 5% range.

Rotameters can be used to manually set flow rates by adjusting the valve opening while observing the scale to establish the required process flow rate. If operating conditions remain unaltered, rotameters can be repeatable to within 0.25%AR.

Most rotameters are relatively insensitive to viscosity variations. The most sensitive are very small rotameters with ball floats, while larger rotameters are less sensitive to viscosity effects. The limitations of each design are published by the manufacturer. The float shape does affect the viscosity limit. If the viscosity limit is exceeded, the indicated flow must be corrected for viscosity (Figure 5-22).

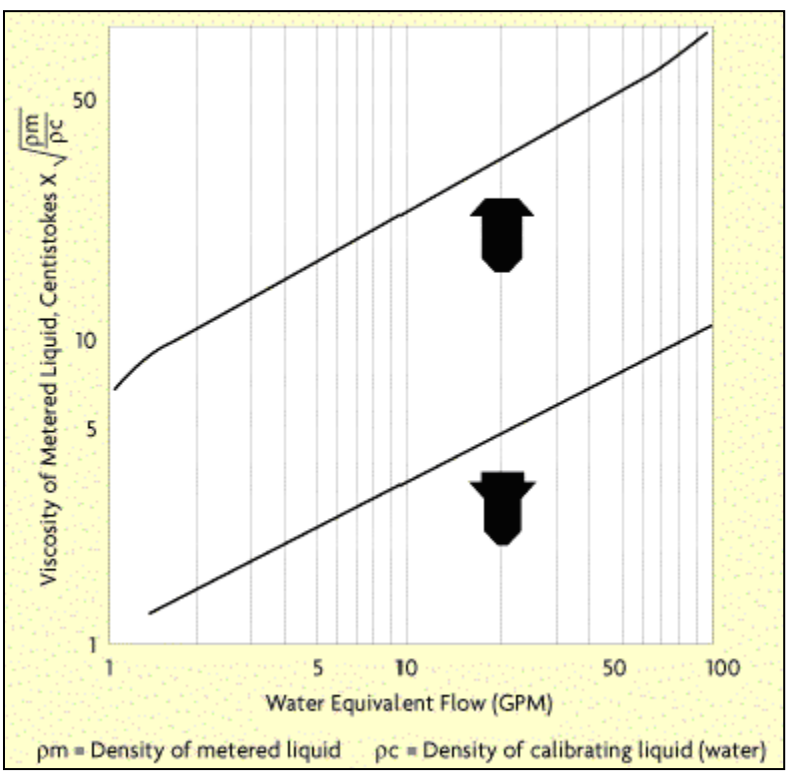

Figure 5-22. Maximum Measurement Velocities

Because the float is sensitive to changes in fluid density, a rotameter can be furnished with two floats (one sensitive to density, the other to velocity) and used to approximate the mass

flow rate. The more closely the float density matches the fluid density, the greater the effect of a fluid density change will be on the float position. Mass-flow rotameters work best with low-viscosity fluids, such as raw sugar juice, gasoline, jet fuel, and light hydrocarbons.

Rotameter accuracy is not affected by the upstream piping configuration. The meter can also be installed directly after a pipe elbow without adversely affecting metering accuracy. Rotameters are inherently self cleaning because, as the fluid flows between the tube wall and the float, it produces a scouring action that tends to prevent the buildup of foreign matter. Nevertheless, rotameters should be used only with clean fluids that do not coat the float or the tube. Liquids with fibrous materials, abrasives, and large particles should also be avoided.

5.7.5 Other variable-area flowmeters

Major disadvantages of the rotameter include its relatively high cost in larger sizes. Additionally, there may not be enough head room for the rotameter if the requirement is for vertical installation. The cost of a large rotameter installation can be reduced by using an orifice bypass or a Pitot tube in combination with a smaller rotameter. The same-size bypass rotameter can be used to measure a variety of flows, with the only difference between applications being the orifice plate and the differential it produces.

Advantages of a bypass rotameter include low cost; however, its major disadvantage is inaccuracy and sensitivity to material build-up. Bypass rotameters are often provided with isolation valves so that they can be removed for maintenance without shutting down the process line.

Tapered-plug flowmeters are variable-area flowmeters with a stationary core and a piston that moves as the flow varies. In one design, the piston movement mechanically moves a pointer, while in another it magnetically moves an external flow rate indicator. The second design has a metallic meter body for applications up to 1000 PSIG.

One gate-type variable-area flow-meter resembles a butterfly valve. Flow through the meter forces a spring-loaded vane to rotate, and a mechanical connection provides local flow rate indication. The inaccuracy of such meters is 2-5% FS. The meter can be used on oil, water, and air, and is available in sizes up to 4”. It also is used as an indicating flow switch in safety interlock systems.

5.8 Mechanical Flowmeters

This section discusses various types of mechanical flowmeters that measure flow using an arrangement of moving parts. These flowmeters measure flow either by passing isolated, known volumes of a fluid through a series of gears or chambers (positive displacement [PD]) or by means of a spinning turbine or rotor.

All PD flowmeters operate by isolating and counting known volumes of a fluid (gas or liquid) while feeding it through the meter. By counting the number of passed isolated volumes, a flow measurement is obtained. Each PD design uses a different means of isolating and counting these volumes. The frequency of the resulting pulse train is a measure of flow rate, while the total number of pulses gives the size of the batch. While PD meters are operated by the kinetic energy of the flowing fluid, metering pumps (described only briefly herein) determine the flow rate while also adding kinetic energy to the fluid.

The turbine flowmeter consists of a multi-bladed rotor mounted at right angles to the flow, suspended in the fluid stream on a free-running bearing. The diameter of the rotor is very close to the ID of the metering chamber, and its speed of rotation is proportional to the volumetric flow rate. Turbine rotation can be detected by solid-state devices or by mechanical sensors. Other types of rotary element flowmeters include the propeller (impeller), shunt, and paddlewheel designs.

5.8.1 Positive displacement flowmeters

The PD meters (Figure 5-23) provide high accuracy (±0.1%AR in some cases) and good repeatability (as high as 0.05%AR). Accuracy is not affected by pulsating flow unless it entrains air or gas in the fluid. The PD meters do not require a power supply for their operation and do not require straight upstream and downstream pipe runs for their installation. The PD meters are available in sizes up to 12" and can operate with turndowns as high as 100:1; ranges of 15:1 or lower are much more common. Slippage between the flowmeter components is reduced and metering accuracy is therefore increased as the viscosity of the process fluid increases.

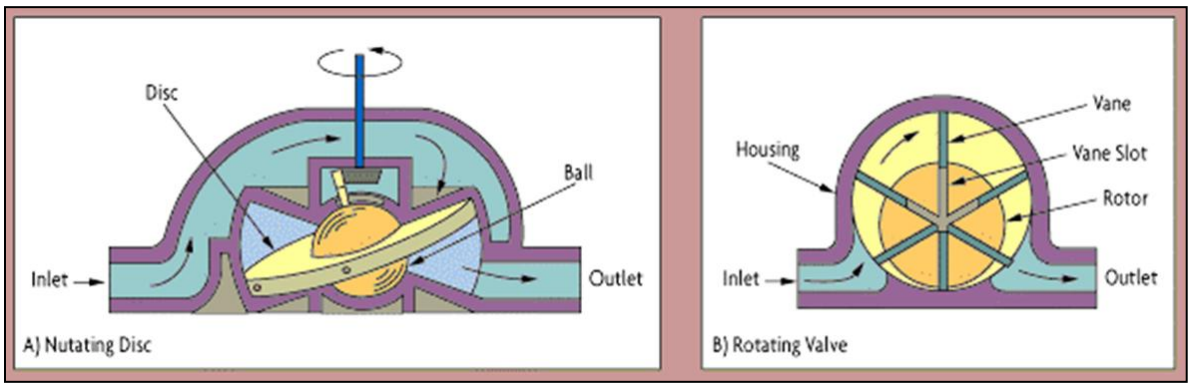

Figure 5-23. Positive Displacement Flowmeter

The process fluid must be clean. Particles greater than 100 microns must be removed by filtering. Since PD meters operate with small clearances between their precision-machined parts, abrasion rapidly destroys their accuracy. For this reason, PD meters are generally not recommended for measuring slurries or abrasive fluids. In clean fluid services, however, their precision and wide rangeability make them ideal for custody transfer and batch charging. They are most widely used as household water meters. Millions of such units are produced annually at a unit cost of less than $50. In industrial and petrochemical applications, PD meters are commonly used for batch charging of both liquids and gases.

Although slippage through the PD meter decreases (that is, accuracy increases) as fluid viscosity increases, pressure drop through the meter also increases. Consequently, as viscosity increases, both the maximum and minimum flow capacities of the flowmeter are decreased. As the viscosity increases, both the slippage and the measurable flow rate decrease. As viscosity decreases, the low flow performance of the meter deteriorates. The maximum allowable pressure drop across the meter constrains the maximum operating flow in high-viscosity services.

5.8.2 Liquid positive displacement flowmeters

Nutating disc meters are the most common PD meters. They are used as residential water meters around the world. As water flows through the metering chamber, it causes a disc to

wobble (or nutate); the disc then turns a spindle that rotates a magnet. This magnet is coupled to a mechanical register or a pulse transmitter. Because the flowmeter entraps a fixed quantity of fluid each time the spindle is rotated, the rate of flow is proportional to the rotational velocity of the spindle.

Because the meter housing must be nonmagnetic, is usually made of bronze. Housings are also made from plastic because of its corrosion resistance properties and lower cost. The wetted parts, such as the disc and spindle, are usually bronze, rubber, aluminum, neoprene, Buna-N, or a fluoroelastomer such as Viton®. Nutating-disc meters are designed for water service and their various component materials must be checked for compatibility with other fluids. Meters with rubber discs give better accuracy than metal discs due to the better sealing they provide.

Nutating-disc meters are available in 5/8-inch to 2-inch sizes and they are suited for 150 PSIG operating pressures with overpressure to a maximum of 300 PSIG. Cold water service units are temperature-limited to 120°F. Hot water units are available up to 250°F.

These meters must meet American Water Works Association (AWWA) standards for accuracy. The accuracy of these meters is required to be ±2%AR. Higher viscosity can produce higher accuracy, while lower viscosity and wear over time will reduce accuracy. The AWWA requires that residential water meters be re-calibrated every 10 years. Because of the intermittent use patterns of residential users, this corresponds to recalibrating 5/8 x 3/4" residential water meters after they have metered five million gallons. In industrial applications, however, these meters are likely to exceed this threshold much sooner. The maximum continuous flow of a nutating disc meter is usually about 60-80% of the maximum flow in intermittent service.

Rotating-vane meters have spring-loaded vanes that entrap increments of liquid between the eccentrically mounted rotor and the casing. The rotation of the vanes moves the flow increment from inlet to outlet and discharge. Accuracy of ±0.1%AR is normal, and larger-size meters on higher viscosity services can achieve accuracy to within 0.05%AR.

Rotating-vane meters are regularly used in the petroleum industry and are capable of metering solids-laden crude oils at flow rates as high as 17,500 GPM. Pressure and temperature limits depend on the materials of construction and can be as high as 350°F and 1000 PSIG. Viscosity limits are 1 to 25,000 centipoise.

In the rotary displacement meter, a fluted central rotor operates in constant relationship with two wiper rotors in a six-phase cycle. Its applications and features are similar to those of the rotary-vane meter.

5.8.3 Piston meters

Oscillating-piston flowmeters are typically used in viscous-fluid services, such as oil metering on engine test stands, where turndown is not critical. Although these meters can also be used on residential water service and pass limited quantities of dirt (such as pipe scale and fine sand), they cannot pass large-particle-size or abrasive solids.

The measurement chamber is cylindrical with a partition plate separating its inlet port from its outlet. The piston is also cylindrical and is punctured by numerous openings to allow free flow on both sides of the piston and the post. The piston is guided by a control roller within the measuring chamber, and the motion of the piston is transferred to a follower magnet that is external to the flowstream. The follower magnet can be used to drive a transmitter, a register, or

both. The motion of the piston is oscillatory (not rotary) since it is constrained to move in one plane. The rate of flow is proportional to the rate of oscillation of the piston.

The internal components of this flowmeter can be removed without disconnection of the meter from the pipeline. Because of the close tolerances required to seal the piston and to reduce slippage, these meters require regular maintenance. Oscillating piston flow meters are available in ½" to 3" sizes, and can generally be used between 100 and 150 PSIG. Some industrial versions are rated to 1500 PSIG, and can meter flow rates from 1 GPM to 65 GPM in continuous service with intermittent "excursions" to 100 GPM. Meters are sized so that pressure drop is below 35 PSID at maximum flow rate. Accuracy ranges from ±0.5%AR for viscous fluids to ±2%AR for non-viscous applications.

Reciprocating piston meters are probably the oldest PD meter designs. They are available with multiple pistons, double-acting pistons, or rotary pistons. As in a reciprocating piston engine, fluid is drawn into one piston chamber as it is discharged from the opposed piston in the meter. Typically, either a crankshaft or a horizontal slide is used to control the opening and closing of the proper orifices in the meter. These meters are usually smaller and are used for measuring very low flows of viscous liquids.

5.8.4 Gear and lobe meters

The oval-gear PD meter uses two fine-toothed gears. One gear is mounted horizontally and the other gear is mounted vertically, with the gears meshing at the tip of the vertical gear and the center of the horizontal gear (Figure 5-24). The two rotors rotate opposite to each other, creating an entrapment in the crescent-shaped gap between the housing and the gear. These meters can be very accurate if slippage between the housing and the gears is kept small. If the process fluid viscosity is greater than 10 centipoise and the flow rate is above 20% of rated capacity, an accuracy of 0.1%AR can be obtained. At lower flows and at lower viscosity, slippage increases and accuracy decreases to 0.5%AR or less.

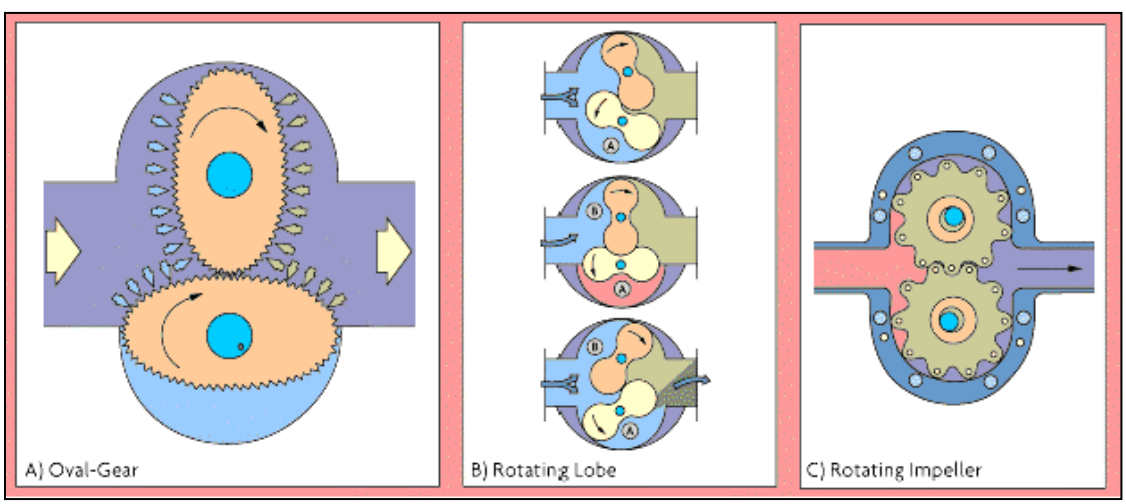

Figure 5-24. Rotating PD Meter

The lubricating characteristics of the process fluid also affect the turndown of an oval gear meter. With liquids that do not lubricate well, maximum rotor speed must be derated to limit wear. Another way to limit wear is to keep the pressure drop across the meter below 15

PSID. Therefore, the pressure drop across the meter limits the allowable maximum flow in high-viscosity service.

Rotating-lobe and impeller-type PD meters are variations of the oval gear flowmeter that do not share its precise gearing. In the rotating lobe design, two impellers rotate in opposite directions within the oval housing. As they rotate, a fixed volume of liquid is entrapped and then transported toward the outlet. Because the lobe gears remain in a fixed relative position, it is only necessary to measure the rotational velocity of one of them. The impeller either is geared to a register or is magnetically coupled to a transmitter. Lobe meters can accommodate line sizes from 2” to 24”. Flow capacity is 8-10 GPM to 18,000 GPM in the larger sizes. Lobe meters provide good repeatability at high flows (better than 0.015%AR) and can be used at high operating pressures (to 1200 PSIG) and temperatures (to 400°F).

The lobe gear meter is available in a wide range of materials of construction, from thermoplastics to highly corrosion-resistant metals. Disadvantages of this design include a loss of accuracy at low flows. In addition, the maximum flow through this meter is less than that of the same size oscillatory piston or nutating disc meter.

In the rotating-impeller meter, very coarse gears entrap the fluid and pass a fixed volume of fluid with each rotation. These meters are accurate to 0.5%AR if the viscosity of the process fluid is both high and constant, or the viscosity varies only within a narrow band. These meters can be made out of a variety of metals, including stainless steel and corrosion-resistant plastics, such as Kynar® PVDF. These meters are used to meter paints and, because they meet specifications for or sanitary designs (3A), they can also be used in applications requiring clean or sterile processing, such as metering milk, juices, and chocolate.

In these units, the movements of magnets embedded in the lobes of rotating impellers are sensed by proximity switches externally mounted to the flow chamber. The detectors are usually Hall-effect detectors as shown in Chapter 3, paragraph 3.5. The sensor transmits a pulse train to a counter or flow controller. These meters are available in 1/10-in to 6-in sizes and can handle pressures to 3000 PSIG and temperatures to 400°F.

5.8.5 Helix meters

The helix meter is a PD device that uses two radially pitched helical gears to continuously entrap the process fluid as it flows. The flow forces the helical gears to rotate in the plane of the pipeline. Optical or magnetic sensors are used to encode a pulse train proportional to the rotational speed of the helical gears. The forces required to make the helices rotate are relatively small and therefore the pressure drop is relatively low in comparison to other PD meters. The best attainable accuracy is about ±0.2%AR.

As shown in Figure 5-25, measurement error rises as either the operating flow rate or the viscosity of the process fluid drops. Helical gear meters can measure the flow of highly viscous fluids (from 3 to 300,000 centipascal), making them ideal for extremely thick fluids, such as glues and very viscous polymers. Because the pressure drop through the meter should not exceed 30 PSID at maximum flow, the maximum rated flow through the meter is reduced as the fluid viscosity increases. If the process fluid has good lubricating characteristics, the meter turndown can be as high as 100:1, but lower turndowns, such as (10:1), are more typical.

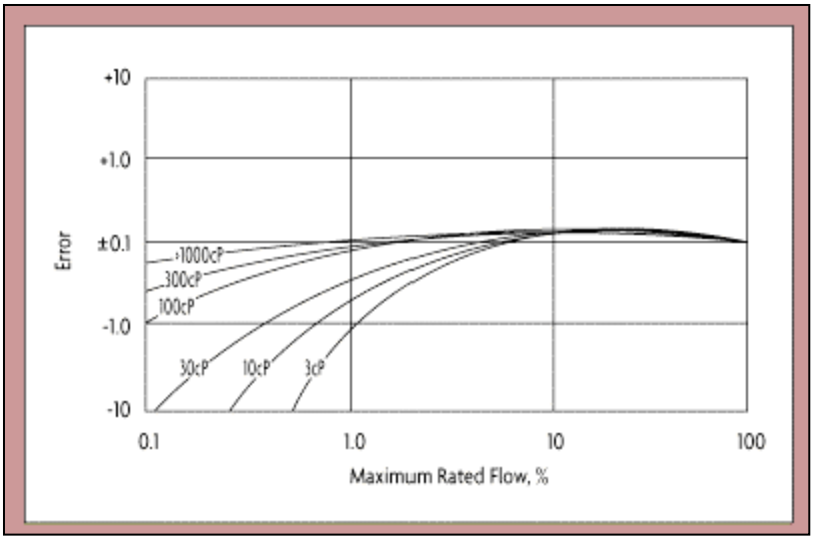

Figure 5-25. Low-Flow Accuracy Versus Viscosity

5.8.6 Metering pumps

Metering pumps are PD meters that also impart kinetic energy to the process fluid (see Figure 5-26). There are three basic designs: peristaltic, piston, and diaphragm.

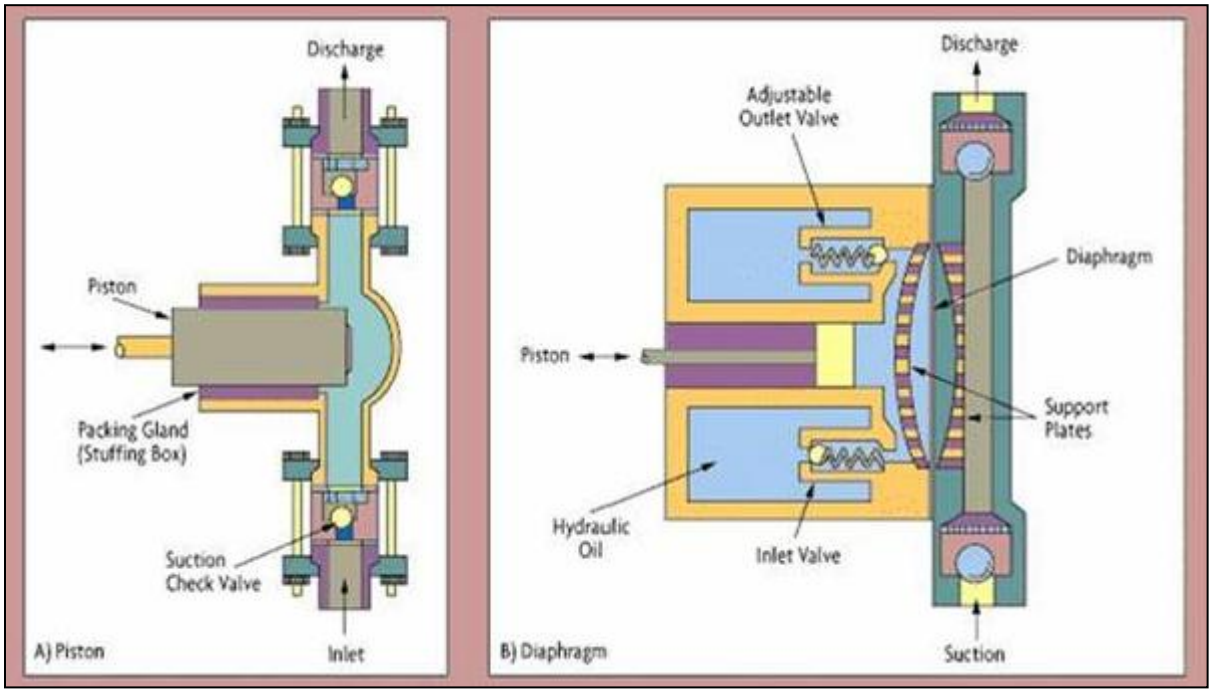

Figure 5-26. Metering Pump Designs

Peristaltic pumps operate by having fingers (or a cam) systematically squeeze plastic tubing against the housing; this squeezing action also serves to position the tubing. Peristaltic pumps are used in laboratories for a variety of medical applications, for the majority of environmental sampling systems, and for dispensing hypochlorite solutions. The tubing material can be silicone-rubber or, if a more corrosion-resistant material is desired, Teflon® tubing.

Piston pumps deliver a fixed volume of liquid with each "out" stroke and a fixed volume enters the chamber on each "in" stroke. Check valves keep the fluid flow from reversing. As with all PD pumps, piston pumps generate a pulsating flow. To minimize the pulsation, multiple pistons or pulsation-dampening reservoirs are installed. Because of the close tolerances of the piston and cylinder sleeve, a flushing mechanism must be provided in abrasive applications. The size of a piston pump is based on the displacement of the piston and the required flow rate and discharge pressure. Check valves are selected to protect against backflow. On critical applications, double check valves are selected.

Diaphragm pumps are the most common industrial PD pumps. A typical configuration consists of a single diaphragm, a chamber, and suction and discharge check valves to prevent backflow. The piston can drive the diaphragm either through direct coupling to the diaphragm or by using the force of hydraulic oil. Maximum output pressure is about 125 PSIG. Variations include bellows-type diaphragms, hydraulically actuated double diaphragms, and air-operated, reciprocating double-diaphragms.

5.8.7 Gas positive displacement meters

PD gas meters operate by counting the number of entrapped volumes of gas passed. These meters operate in a similar manner to the way PD meters operate on liquids. The primary difference is that gases are compressible.

Diaphragm gas meters most often are used to measure the flow of natural gas, especially in metering consumption by households. The meter is constructed from aluminum castings with cloth-backed rubber diaphragms. The meter consists of four chambers: the two diaphragm chambers on the inlet and outlet sides and the inlet and outlet chambers of the meter body. The passage of gas through the meter creates a D/P between the two diaphragm chambers by compressing the one on the inlet side and expanding the one on the outlet side. This action alternately empties and fills the four chambers. The slide valves at the top of the meter alternate the roles of the chambers and synchronize the action of the diaphragms, as well as operating the crank mechanism for the meter register.

Diaphragm meters generally are calibrated for natural gas, which has an SG of 0.6 (relative to air). Therefore, it is necessary to re-calibrate the flow rating of the meter when it is used to meter other gases. The calibration for the new flow rating (Q_N) is obtained by multiplying the meter's flow rating for natural gas (Q_C) by the square root of the ratio of the SGs of natural gas (0.6) and the new gas (SG_N):

$$\boxed{Q_N = Q_C \sqrt{\frac{0.6}{SG_N}}} \qquad \text{Eqn. 5-11}$$

Diaphragm meters are usually rated in units of cubic feet per hour and sized for a pressure drop of 0.5-2 inH_2O. Accuracy is roughly ±1%AR over a 200:1 range. They maintain their accuracy for long periods of time, which makes them a good choice for retail revenue metering applications. Unless the gas is unusually dirty (producer gas or recycled methane from composting or digesting, for example), the diaphragm meter will operate indefinitely with little or no maintenance.

Lobe gear meters (also known as lobed impeller meters), are also used for gas service. Accuracy in gas service is ±1%AR over a 10:1 turndown, and typical pressure drop is 0.1 PSID. Because of the close tolerances, upstream filtration is required for dirty lines.

Rotating vane meters measure the flow of gas in the same ranges as lobe gear meters (up to 100,000 ft^3/hr) but can be used over a wider 25:1 turndown. Rotating vane meters also incur a lower pressure drop of 0.05 inH_2O for similar accuracy, and because the clearances are somewhat more forgiving, upstream filtration is not as critical.

5.8.8 High-precision positive displacement systems

High-precision gas meters are usually a hybrid combination of a standard PD meter and a motor drive that eliminates the pressure drop across the meter. Equalizing the inlet and outlet pressures eliminates slip flows, leakage, and blow-by. In high-precision gas flowmeter installations, high-sensitivity leaves are used to detect the pressure differential, and displacement transducers are used to measure the deflection of the leaves (Figure 5-27). Designed to operate at ambient temperatures and at up to 30 PSIG pressures, this meter provides accuracy to within 0.25%AR over a 50:1 range and 0.5% over a 100:1 range. Flow capacity ranges from 0.3-1500 SCFM.

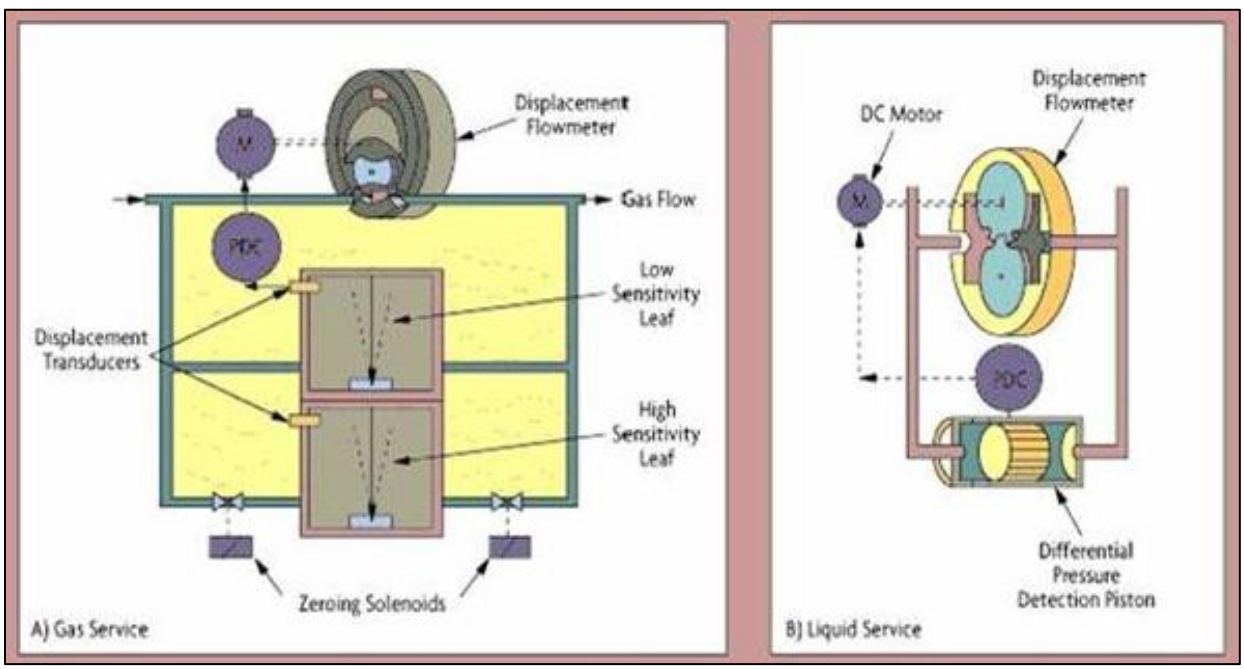

Figure 5-27. High-Precision PD Meter

For liquid service, a servomotor-driven oval-gear meter equalizes the pressure across the meter. This increases accuracy at low flows and under varying viscosity conditions. This flowmeter uses a very sensitive piston to detect the meter differential and drives a variable speed servomotor to keep the differential near zero. This design is claimed to provide 0.25%AR accuracy over a 50:1 range at operating pressures of up to 150 PSIG. High-precision flowmeters are used on engine test stands for fuel flow measurement (gasoline, diesel, alcohol, etc.). Flow ranges from 0.04-40 gallons per hour are typical. Vapor separators are usually included to prevent vapor lock.

5.8.9 Testing, calibration, and provers

Because wear increases the clearances, all meters with moving parts require periodic testing, recalibration, and repair. Recalibration can be done either in a laboratory or on line using a prover.

Gas systems are recalibrated against a bell-jar prover, which is a calibrated cylindrical bell, liquid-sealed in a tank. As the bell is lowered, it discharges a known volume of gas through the meter being tested. The volumetric accuracy of bell-jar provers is on the order of 0.1% by volume, and provers are available in discharge volumes of 2, 5, 10 ft^3, and larger.

Liquid systems can be calibrated in the laboratory against either a calibrated secondary standard or a gravimetric flow loop. This approach can provide high accuracy (up to ±0.01% of rate) but requires removing the flowmeter from service.

In many operations, especially in the petroleum industry, it is difficult or impossible to remove a flowmeter from service for calibration. Therefore, field-mounted and in-line provers have been developed. This type of prover (see Figure 5-28) consists of a calibrated chamber equipped with a barrier piston. Two detectors are mounted a known distance (and therefore a known volume) apart. As the flow passes through the chamber, the displacer piston is moved downstream. Dividing the volume of the chamber by the time it takes the displacer to move from one detector to the other gives the calibrated flow rate. This rate is then compared to the reading of the flowmeter under test.

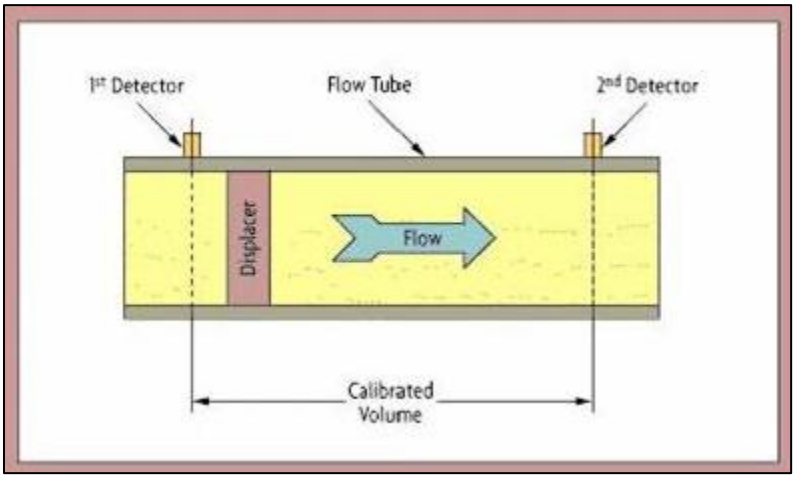

Figure 5-28. Flow Prover

Provers are repeatable on the order of 0.02% and can operate at up to 3000 PSIG and 165°F/75°C. Their operating flow range is from as low as 0.001 GPM to as high as 20,000 GPM.

5.8.10 Positive displacement meter accessories

PD meter accessories include strainers, filters, air and vapor release assemblies, pulsation dampeners, temperature compensation systems, and a variety of valves to permit dribble cut-off in batching systems. Mechanical registers can be equipped with mechanical or electronic ticket-printers for inventory control and point-of-use sales. Batching flow computers are readily available; analog and intelligent digital transmitters are available as well. Automatic meter reading (AMR) devices permit the remote retrieval of readings by utility personnel.

5.9 Turbine Flowmeters

Invented by Reinhard Woltman in the 18th century, the turbine flowmeter is an accurate and reliable flowmeter for both liquids and gases. The turbine flowmeter (Figure 5-29) consists of a multi-bladed rotor mounted at right angles to the flow and suspended in the fluid stream on a free-running bearing. The diameter of the rotor is very slightly less than the ID of the metering chamber, and its speed of rotation is proportional to the volumetric flow rate. Turbine rotation can be detected by solid-state devices (reluctance, inductance, capacitive, and Hall-effect pick-ups) or by mechanical sensors (gear and magnetic drives).

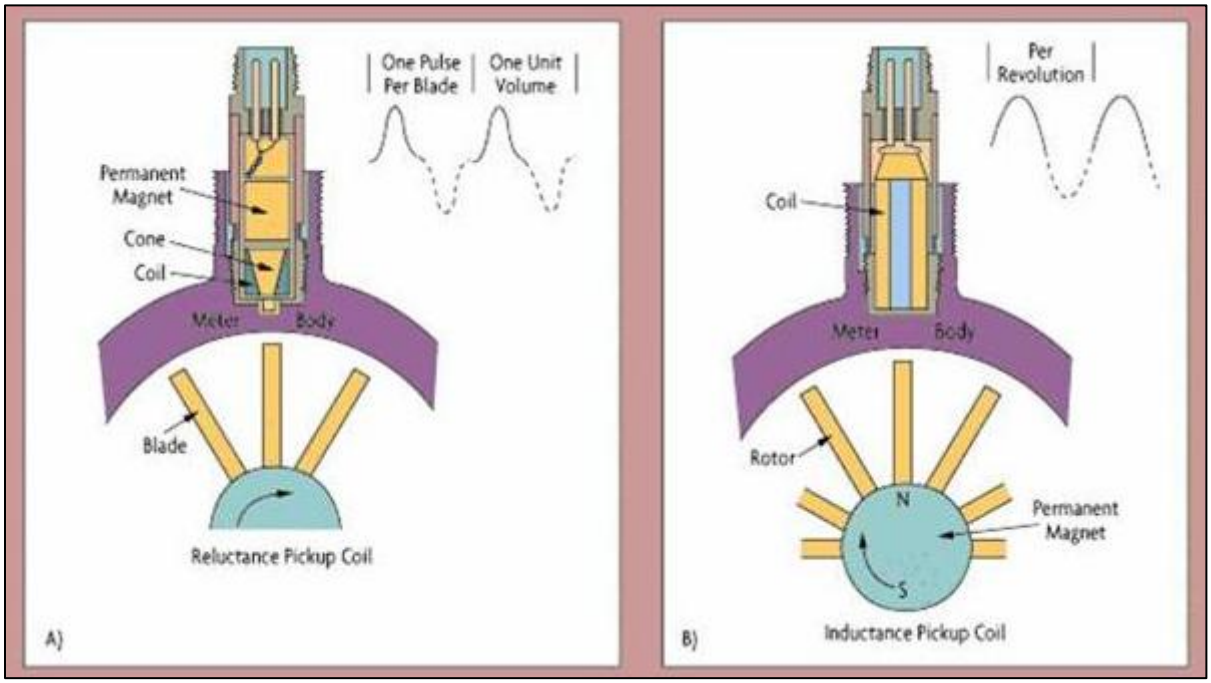

Figure 5-29. Turbine Flowmeters

In the reluctance pick-up, the coil is a permanent magnet and the turbine blades are made of a material attracted to magnets. As each blade passes the coil, a voltage is generated in the coil. Each pulse represents a discrete volume of liquid. The number of pulses per unit volume is called the meter's K-factor.

In the inductance pick-up, either the permanent magnet is embedded in the rotor, or the blades of the rotor are made of permanently magnetized material. As each blade passes the coil, it generates a voltage pulse. In some designs, only one blade is magnetic and the pulse represents a complete revolution of the rotor.

The outputs of reluctance and inductive pick-up coils are continuous sine waves with the pulse train's frequency proportional to the flow rate. At low flow, the output (the height of the voltage pulse) may be on the order of 20 mV peak-to-peak. It is not advisable to transport such a weak signal over long distances. Therefore, the distance between the pickup and associated display electronics or preamplifier must be short.

Capacitive sensors produce a sine wave by generating an RF signal that is amplitude-modulated by the movement of the rotor blades. Instead of pick-up coils, Hall-effect transistors

can also be used. These transistors change their state when they are in the presence of a very low strength (on the order of 25 G) magnetic field.

In these turbine flowmeters, very small magnets are embedded in the tips of the rotor blades. Rotors are typically made of a non-magnetic material, like polypropylene, Ryton, or PVDF (Kynar®). The signal output from a Hall-effect sensor is a square wave pulse train, at a frequency proportional to the volumetric flow rate.

Because Hall-effect sensors have no magnetic drag, they can operate at lower flow velocities (0.2 fps) than magnetic pick-up designs (0.5-1.0 fps). In addition, the Hall-effect sensor provides a signal of high amplitude (typically a 10.8 V square wave), permitting distances up to 3000 feet between the sensor and the electronics, without amplification.

In the water distribution industry, mechanical-drive Woltman-type turbine flowmeters continue to be the standard. These turbine meters use a gear train to convert the rotation of the rotor into the rotation of a vertical shaft. The shaft passes between the metering tube and the register section through a mechanical stuffing box, turning a geared mechanical register assembly to indicate flow rate and to actuate a mechanical totalizer counter.

More recently, the water distribution industry has adopted the magnetic drive as an improvement over high-maintenance mechanical-drive turbine meters. This type of meter has a sealing disc between the measuring chamber and the register. On the measuring chamber side, the vertical shaft turns a magnet instead of a gear. On the register side, an opposing magnet is mounted to turn the gear. This design permits a completely sealed register to be used with a mechanical drive mechanism.

In the United States, the AWWA sets the standards for turbine flowmeters used in water distribution systems. Standard C701[12] provides for two classes (Class I and Class II) of turbine flowmeters. Class I turbine meters must register within ±2% at maximum flow when tested. Class II turbine meters must register within ±1.5%AR. Both Class I and Class II meters must have mechanical registers.

Solid-state pickup designs are less susceptible to mechanical wear than AWWA Class I and Class II meters.

5.9.1 Design and construction variations

Most industrial turbine flowmeters are manufactured from austenitic stainless steel (301, 303, 304 grades), whereas turbine meters intended for municipal water service are bronze or cast iron. The rotor and bearing materials are selected to match the process fluid and the service. Rotors are often made from stainless steel and bearings of graphite, tungsten carbide, and ceramics. In special cases, rotors are made of synthetic ruby or sapphire combined with tungsten carbide. In all cases, bearings and shafts are designed to provide minimum friction and maximum resistance to wear. Some corrosion-resistant designs are made from plastic materials, such as polyvinyl chloride.

Small turbine meters are often called barstock turbines because in sizes of ¾” to 3” they are machined from stainless steel hexagonal barstock. The turbine is suspended by a bearing

[12] American Water Works Association. Cold-Water Meters - Turbine Type, for Customer Service. AWWA C701. 22 January 2012. May be superseded by update. Available for purchase at http://engineers.ihs.com/document/abstract/WDCSACAAAAAAAAAA.

between two hanger assemblies that also serve to condition the flow. This design is suited for high operating pressures (up to 5000 PSIG).

The insertion turbine meter is a point-velocity device similar to a Pitot tube D/P flowmeter. The design of the insertion turbine meter allows it to be inserted into either liquid or gas lines to a depth at which the small-diameter rotor will read the average velocity in the line. Because these meters are very sensitive to the velocity profile of the flowing stream, they must be profiled at several points across the flow path.

Insertion turbine meters can be designed for gas applications (small, lightweight rotor) or for liquid (larger rotor, water-lubricated bearings). They are often used in large diameter pipelines where it would be cost-prohibitive to install a full-size meter. They can be hot-tapped into existing pipelines of 6" or larger through a valve system without shutting down the process. Typical accuracy of an insertion turbine meter is 1% FS and the minimum flow velocity is about 0.2 fps.

5.9.2 Turbine meter accuracy

Figure 5-30 shows a typical turbine-meter calibration curve describing the relationship between flow and K-factor (pulses/gallon). The accuracy of turbine meters is typically given in %AR. This particular meter has a linearity tolerance band of ±0.25% over a 10:1 flow range and ±0.15% linearity in a 6:1 range. The repeatability is from ±0.2% to ±0.02% over the linear range.

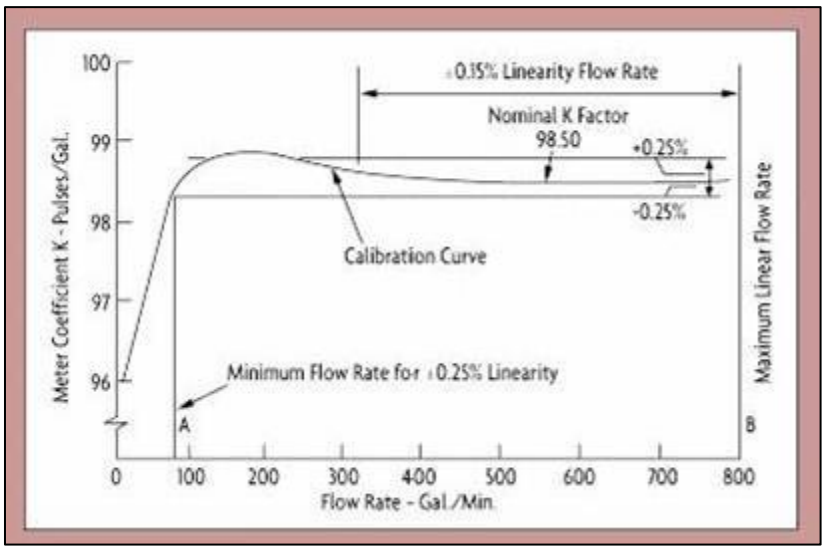

Figure 5-30. Calibration Curve

Because there are minor inconsistencies in the manufacturing process, all turbine flowmeters are calibrated prior to shipment. The resulting K-factor in pulses per volume unit will vary within the stated linearity specification. It is possible, however, to register several K-factors for different portions of the flow range and to electronically switch from one to the other as the measured flow changes. Naturally, the K-factor is applicable only to the fluid for which the meter was calibrated.

Barstock turbine meters typically are linear to ±0.25%AR over a 10:1 flow range. The linearity of larger meters is ±0.5%AR over a 10:1 flow range. Turbine meters have a typical

nonlinearity (the turbine meter hump, shown in the Figure 5-30 above) in the lower 25-30% of their range. Keeping the minimum flow reading above this region will permit linearity to within 0.15% on small and 0.25% on larger turbine meters. If the range of 10:1 is insufficient, some turbine flow- meters can provide up to 100:1 turndowns if accuracy is de-rated to 1% of FS.

5.9.3 Sizing and selection

Turbine meters should be sized so that the expected average flow is between 60% and 75% of the maximum capacity of the meter. If the pipe is oversized (with flow velocity under 1 fps), one should select a Hall-effect pick-up and use a meter smaller than the line size. Flow velocities under 1 fps can be insufficient, while velocities in excess of 10 fps can result in excessive wear. Most turbine meters are designed for maximum velocities of 30 fps.

Turbine flowmeters should be sized for between 3 and 5 PSID pressure drop at maximum flow. Because pressure drop increases with the square of flow rate, reducing the meter to the next smaller size will raise the pressure drop considerably.

Viscosity affects the accuracy and linearity of turbine meters. It is therefore important to calibrate the meter for the specific fluid it is intended to measure. Repeatability is generally not greatly affected by changes in viscosity, and turbine meters often are used to control the flow of viscous fluids. Generally, turbine meters perform well if the Reynolds number is greater than 4000 and less than or equal to 20,000.

Because it affects viscosity, temperature variation can also adversely affect accuracy and must be compensated for or controlled. The turbine meter's operating temperature ranges from 200 to 450°C (392 to 842°F).

Density changes do not greatly affect turbine meters. On low-density fluids (SG < 0.7), the minimum flow rate is increased due to the reduced torque, but the meter's accuracy usually is not affected.

5.9.4 Installation and accessories

Turbine meters are sensitive to upstream piping geometry that can cause vortices and swirling flow. Specifications call for 10-15 diameters of straight run upstream and five diameters of straight run downstream of the meter; however, each of the following upstream obstructions require more than 15 diameters of upstream straight-pipe runs:

a. 20 diameters for 90° elbow, tee, filter, strainer, or thermowell;

b. 25 diameters for a partially open valve;

c. 50 or more diameters if there are two elbows in different planes or if the flow is spiraling or corkscrewing.

In order to reduce this straight-run requirement, straightening vanes are installed. Tube bundles or radial vane elements are used as external flow straighteners located at least five diameters upstream of the meter.

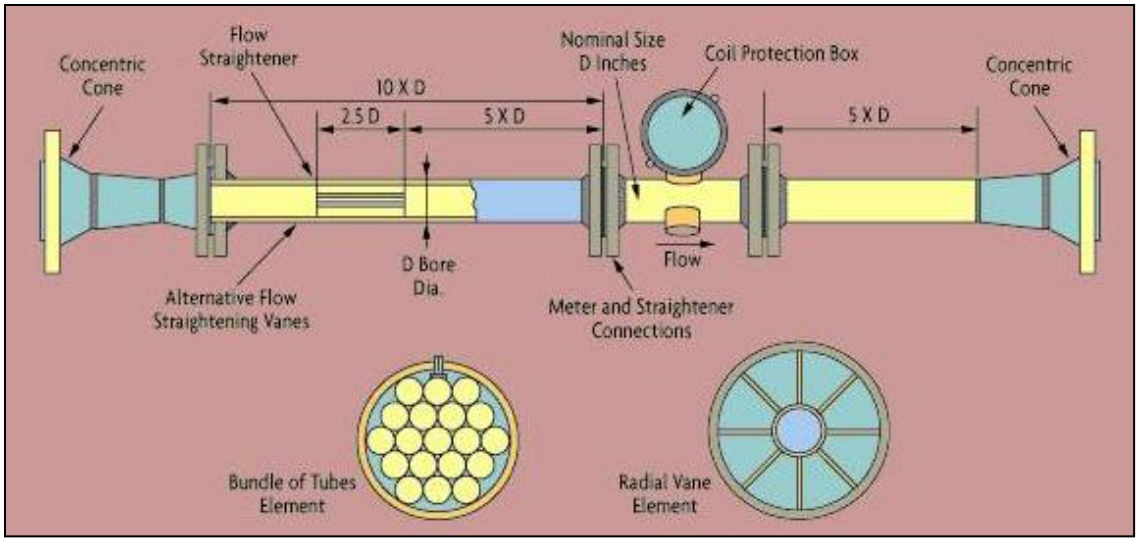

Figure 5-31. Flow Straighteners

Under certain conditions, the pressure drop across the turbine can cause flashing or cavitation. Flashing causes the meter to read high, and cavitation causes rotor damage. In order to protect against this, the downstream pressure must be held at 1.25 times the vapor pressure plus twice the pressure drop. Small amounts of air entrainment (100 milligrams per liter [mg/l] or less) will make the meter read only a bit high, while large quantities can destroy the rotor.

Turbine meters also can be damaged by solids entrained in the fluid. If the amount of suspended solids exceeds 100 mg/l of +75 micron size, a flushing y-strainer or a motorized cartridge filter must be installed at least 20 diameters of straight run upstream of the flowmeter.

5.9.5 Gas turbine and shunt meters

Gas meters compensate for the lower driving torque produced by the relatively low density of gases. This compensation is obtained by very large rotor hubs, very light rotor assemblies, and larger numbers of rotor blades. Gas turbine meters are available from 2 to 12" and with flow ratings up to 150,000 ft^3/hr. When operating at elevated gas pressures (1400 PSIG), a rangeability of 100:1 can be obtained in larger size meters. Under lower pressure conditions, typical rangeability is 20:1 with ±1% linearity. The minimum upstream straight pipe-run requirement is 20 pipe diameters.

Shunt flowmeters consist of an orifice in the main line and a rotor assembly in the bypass. These meters are used in gas and steam service. These meters are available is sizes 2" and larger and are accurate to ±2% over a range of 10:1.

5.9.6 Other rotary flowmeters

Other types of rotary element flowmeters include propeller (impeller), shunt, and paddlewheel designs.

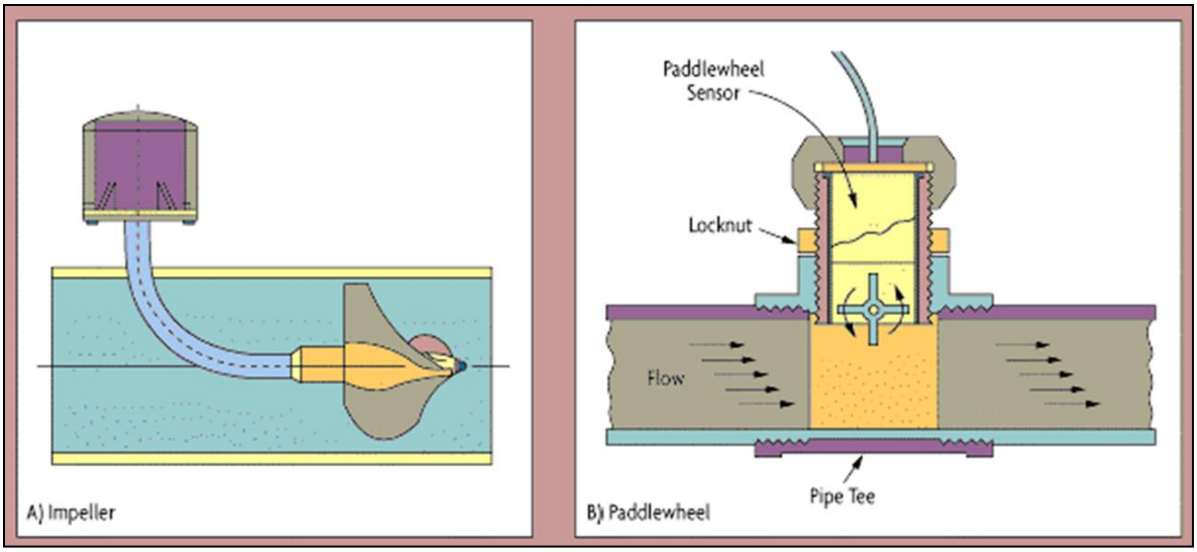

Figure 5-32. Rotary Flowmeters

Propeller meters are commonly used in large-diameter (over 4") irrigation and water distribution systems. Their primary trade-off is low cost versus low accuracy. The AWWA Standard C-704[13] sets the accuracy criterion for propeller meters at 2%AR. Propeller meters have a rangeability of about 4:1 and exhibit very poor performance if the velocity drops below 1.5 fps. Most propeller meters are equipped with mechanical registers. Mechanical wear, straightening, and conditioning requirements are the same as for turbine meters.

Paddlewheel flowmeters use a rotor whose axis of rotation is parallel to the direction of flow. Most paddlewheel meters have flat-bladed rotors and are inherently bi-directional. Several manufacturers, however, use crooked rotors that only rotate in the forward direction. For smaller pipes (1/2" to 3"), these meters are available only with a fixed insertion depth, while for larger pipe sizes (4" to 48") adjustable insertion depths are available. The use of capacitively coupled pick-ups or Hall-effect sensors extends the range of paddlewheel meters into the low-flow velocity region of 0.3 fps.

Low-flow meters (usually smaller than 1") have a small jet orifice that projects the fluid onto a Pelton wheel. Varying the diameter and the shape of the jet orifice matches the required flow range and provides a flowmeter that is accurate to 1% FS and has a rangeability of 100:1. Higher accuracy can be achieved by calibrating the meter and by lowering its range. Because of the small size of the jet orifice, these meters can only be used on clean fluids and they incur a pressure drop of about 20 PSID. Materials used in construction of these meters include polypropylene, PVDF, tetrafluoroethylene and PFA, brass, aluminum, and stainless steel.

5.10 Electronic Flowmeters

While the flow measurement technologies discussed in this chapter (magnetic, vortex, and ultrasonic) are neither exclusively nor exhaustively electronic in nature, they do represent a logical grouping of flow measurement technologies. Made possible by modern sophisticated

[13] American Water Works Association. Propeller Type Meters for Waterworks Applications. AWWA C704. 10 June 2012. May be superseded by update. Available for purchase at http://engineers.ihs.com/document/abstract/YJSKKCAAAAAAAAAA.

electronics technology, these devices have no moving parts (other than those that vibrate) and are relatively non-intrusive.

Magnetic flowmeters, for example, are the most directly electrical in nature, deriving their first principles of operation from Faraday's law. Vortex meters depend on PE sensors to detect vortices shed from a stationary shedder bar. Success of modern ultrasonic flowmeters is mainly due to sophisticated digital signal processing.

5.10.1 Magnetic flowmeters

The operation of magnetic flowmeters is based on Faraday's law of electromagnetic induction. Magmeters can only detect the flow of conductive fluids. Early magmeter designs required a minimum fluidic conductivity of 1-5 microsiemens per cm for their operation. The newer designs have reduced that requirement a hundredfold to between 0.05 and 0.1 microsiemens per cm.

The magnetic flowmeter consists of a non-magnetic pipe lined with an insulating material. A pair of magnetic coils is situated as shown in the Figure 5-33 and a pair of electrodes penetrates the pipe and its lining. If a conductive fluid flows through a pipe of diameter (D) through a magnetic field density (B) generated by the coils, the amount of voltage (E) developed across the electrodes, as predicted by Faraday's law, will be proportional to the velocity (V) of the liquid. Because the magnetic field density and the pipe diameter are fixed values, they can be combined into a calibration factor (K) and the equation reduces to:

$$\boxed{E = KV} \qquad \text{Eqn. 5-12}$$

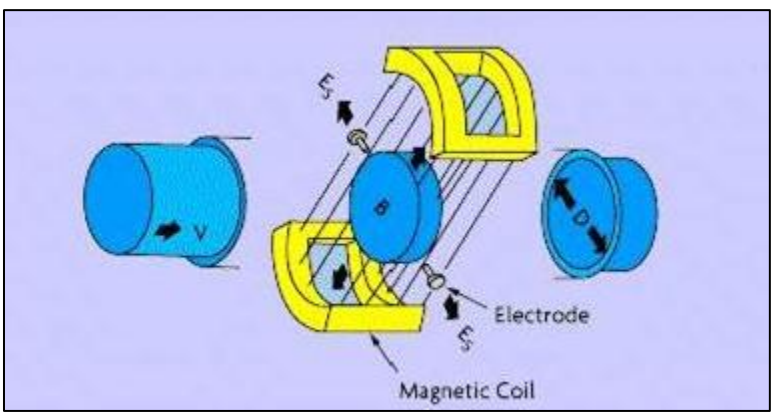

Figure 5-33. Magmeter

The velocity differences at different points of the flow profile are compensated for by a signal-weighing factor. Additional compensation is also provided by shaping the magnetic coils such that the magnetic flux will be greatest where the signal weighing factor is lowest, and vice versa.

Manufacturers determine each magmeter's K-factor by water calibration of each flow tube. The K value thus obtained is valid for any other conductive liquid and is linear over the entire flowmeter range. For this reason, flow tubes are usually calibrated at only one velocity. Magmeters can measure flow in both directions because reversing direction will change the polarity but not the magnitude of the signal.

The K value obtained by water testing might not be valid for non-Newtonian fluids (with velocity-dependent viscosity) or magnetic slurries (those containing magnetic particles). These types of fluids can affect the density of the magnetic field in the tube. In-line calibration and special compensating designs should be considered for both of these fluids.

5.10.2 Magmeter excitation

The voltage that develops at the electrodes is a millivolt signal. This signal is typically converted into a standard current (4-20 mA) or frequency output (0-10,000 Hz) at or near the flow tube. Intelligent magnetic transmitters with digital outputs allow direct connection to a distributed control system. Because the magmeter signal is a weak one, the lead wire should be shielded and twisted if the transmitter is remote.

The magmeter's coils can be powered by either AC or DC. When AC excitation is used, line voltage is applied to the magnetic coils (Figure 5-34). As a result, the flow signal (at constant flow) will also look like a sine wave. The amplitude of the wave is proportional to velocity. In addition to the flow signal, noise voltages can be induced in the electrode loop. Out-of-phase noise is easily filtered, but in-phase noise requires that the flow be stopped (with the pipe full) and the transmitter output set to zero. The main problem with AC magmeter designs is that noise can vary with process conditions and frequent re-zeroing is required to maintain accuracy.

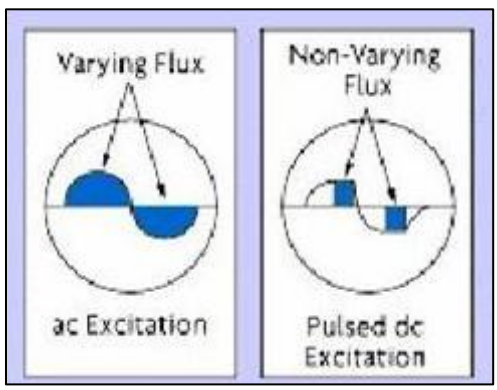

Figure 5-34. Magmeter Excitation

In DC excitation designs, a low frequency (7-30 Hz) DC pulse is used to excite the magnetic coils. When the coils are pulsed on, the transmitter reads both the flow and noise signals. Between pulses, the transmitter sees only the noise signal and, therefore, the noise can be continuously eliminated after each cycle.

This provides a stable zero and eliminates zero drift. In addition to being more accurate and able to measure lower flows, DC meters are less bulky, easier to install, use less energy, and have a lower cost of ownership than AC meters. One new DC design uses significantly more power than the earlier generations and thereby creates a stronger flow tube signal.

Another new design uses a unique dual excitation scheme that pulses the coils at 7 Hz for zero stability and at 70 Hz to obtain a stronger signal. Magmeter transmitters can be supplied with either AC or DC power. A two-wire, loop-powered DC magnetic flowmeter is also available in an intrinsically safe design, but its performance is reduced because of power limitations.

Pulsed AC meters, eliminating the zero stability problems of traditional AC designs, have also been introduced. These devices contain circuitry that periodically disrupts the AC power, automatically negating the effects of process noise on the output signal.

Today, DC excitation is used in about 85% of installations and AC magmeters claim the other 15% when justified by the following conditions:

a. when air is entrained in large quantities in the process stream;

b. when the process stream is a slurry and the solid particle sizes are not uniform and/or the solid phase is not homogeneously mixed within the liquid;

c. when the flow is pulsating at a frequency under 15 Hz.

When any of the above three conditions exist, the output of a pulsed DC meter is likely to be noisy. In some cases, one can minimize the noise problem (hold the fluctuations within 1% of set point) by filtering and damping the output signal. If more than 1 to 3 seconds of damping is required to eliminate the noise, it is always better to use an AC meter.

5.10.3 Flow tubes, liners, and probes

The face-to-face dimensions of flanged flow tubes (lay lengths) usually meet the recommendations of the International Organization for Standardization (ISO). The dimensions of short-form magmeters usually meet these guidelines as well. Magnetic flow tubes and liners are available in many materials and are widely used in all the process industries, including food, pharmaceutical, mining, and metals.

Some liner materials (particularly Teflon®) can be damaged when pry bars are used while installing it or removing it from process piping. Liner materials can also be damaged if the flange bolts encounter too much torque. Liner protectors are available to help prevent such damage.

Any flow tube can generally be used with any transmitter offered by the same manufacturer. Depending on its construction and features, the cost of a 2” magnetic flowmeter can range from $1500 to $5000. This cost has been coming down, but is still higher than that of the least expensive flow sensors.

Magnetic flowmeters also can be packaged as probes and inserted into process pipes through taps. These probes contain both the electrodes and magnetic coils. The flowing process fluid induces a voltage at the electrodes, which reflects the velocity at the probe tip and not the average fluid velocity across the pipe. These magmeters are inexpensive and are retractable so that the process does not have to be shut down to install or remove them. Metering accuracy is highly dependent on the relationship between the measured velocity and the average velocity in the pipe.

5.10.4 Electrodes

In conventional flow tubes, the electrodes are in contact with the process fluid. They can be removable or permanent if produced by a droplet of liquid platinum as it sinters through a ceramic liner and fuses with the aluminum oxide to form a perfect seal. This design is preferred due to its low cost, its resistance to abrasion and wear, its insensitivity to nuclear radiation, and its suitability for sanitary applications because there are no cavities in which bacteria can grow.

On the other hand, the ceramic tube cannot tolerate bending, tension, sudden cooling, oxidizing acids, or hot and concentrated caustic.

In a more recent capacitively coupled design, non-contacting electrodes are used. These designs use areas of metal sandwiched between layers of liner material. They are available in sizes under eight inches in diameter and with ceramic liners. Magmeters using these non-contacting electrodes can read fluids having 100 times less conductivity than required to actuate conventional flow tubes. Because the electrode is behind the liner, these designs are also better suited for severe coating applications.

5.10.5 Selection and sizing

Magnetic flowmeters can detect the flow of clean, multi-phase, dirty, corrosive, erosive, or viscous liquids and slurries as long as the conductivity exceeds the minimum required for the particular design. The expected inaccuracy and rangeability of the better designs are from 0.2 to 1% of rate, over a range of 10:1 to 30:1, if the flow velocity exceeds 1 fps. At slower flow velocities (even below 0.1 fps), measurement error increases, but the readings remain repeatable.

It is important that the conductivity of the process fluid be uniform. If two fluids are mixed and the conductivity of one additive is significantly different from that of the other process fluid, it is important that they be completely intermixed before the blend reaches the magmeter. If the blend is not uniform, the output signal will be noisy. To prevent this situation, pockets of varying conductivity can be eliminated by installing a static mixer upstream of the magmeter.

Magmeter size is determined by capacity tables or charts published by the manufacturer. Figure 5-35 provides a flow capacity nomograph for line sizes from 0.1 to 96”. For most applications, flow velocities should fall between 3 fps and 15 fps. For corrosive fluids, the normal velocity range should be 3-6 fps. If the flow tube is continuously operated below 3 fps, metering accuracy will deteriorate while continuous operation exceeding the upper limit of the normal velocity range will shorten the life of the meter.

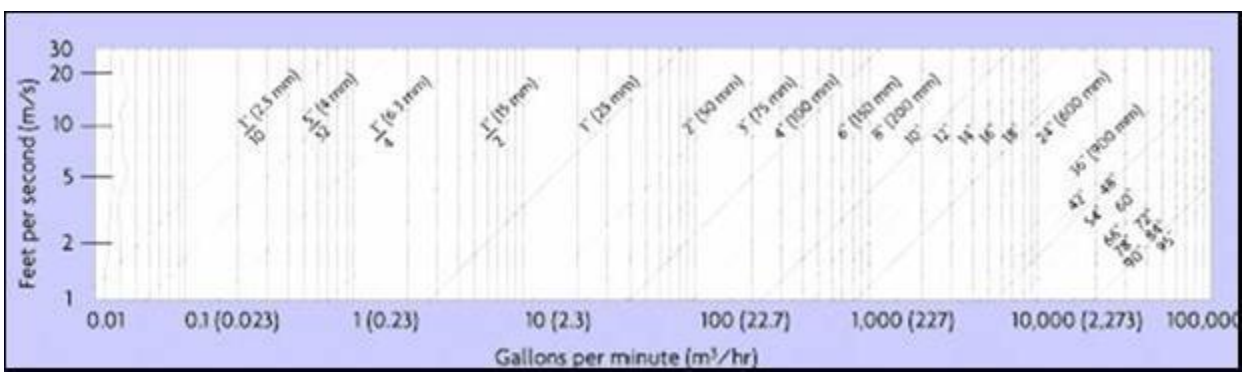

Figure 5-35. Gallons per Minute Versus Feet per Second for Magnetic Flowmeters

The obstructionless nature of the magmeter lowers the likelihood of plugging and limits the unrecovered head loss to that of an equivalent length of straight pipe. The low pressure drop is desirable because it lowers pumping costs and aids gravity feed systems.

5.10.6 Problem applications

The magmeter cannot distinguish entrained air from the process fluid; therefore, air bubbles will cause the magmeter to give a high reading. If the trapped air is not homogeneously

dispersed, and is in the form of air slugs or large air bubbles the size of the electrode, the output signal will be noisy or even disrupted. Therefore, in applications where air entrainment is likely, the meter should be sized so that the flow velocity under normal flow conditions is 6-12 fps.

Coating of the electrodes is another common magmeter problem. Material build-up on the inner surfaces of the meter can electrically isolate the electrodes from the process fluid. This build-up can cause a signal loss or a measurement error by either changing the diameter of the flow tube or by causing span and zero shifts. Naturally, the best solution is prevention. One preventive step is to size the meter such that, under normal flow conditions, the flowing velocity will be relatively high (at least 6-12 fps, or as high as practical considering the possibility of erosion and corrosion).

Another method of prevention is to use electrodes that protrude into the flowstream to take advantage of the turbulence and washing effect. In more severe service, a mechanical cleaning system can be installed and used intermittently or continuously to eliminate coating and build-ups.

5.10.7 Installation

The magnetic flowmeter must always be full of liquid. Therefore, the preferred location for magmeters is in vertical upward flow lines. Installation in horizontal lines is acceptable if the pipe section is at a low point and if the electrodes are not at the top of the pipe. This prevents air from coming into contact with the electrodes. When the process fluid is a slurry and the magmeter is installed at a low point, it should be removed during long periods of shutdown so that solids will not settle and coat the internal materials.

If it is essential to drain the magmeter periodically, it should be provided with an empty tube zero option. When this option is activated, the output of the transmitter will be clamped to zero. Detection of empty tube conditions is by circuitry connected to extra sets of electrodes in the flow tube. The empty tube zero feature can also be activated by an external contact, such as a pump-status contact.

Magmeters require five diameters of straight pipe upstream and two diameters downstream in order to maintain accuracy and minimize liner wear. Liner protectors are available to protect the leading edge of the liners from the abrasive effects of process fluids. If the magmeter is installed in a horizontal pipe exceeding 30 feet in length, the pipe should be supported on both sides of the meter.

The magnetic flowmeter must be electrically grounded to the process liquid. This grounding is necessary because the magmeter is part of the path for any stray current traveling down the pipeline or through the process liquid. Bonding, by grounding the meter at both ends to the process fluid, provides a short circuit for stray currents by routing them around the flow tube instead of through it. If the system is not properly grounded, these currents can create a zero shift in the magnetic flowmeter output.

Electrical bonding to the process fluid can be achieved by metal ground straps. These straps connect each end of the flow tube to the adjacent pipeline flanges, which in turn, are in contact with the process liquid. Straps are used when the piping is electrically conductive. When the pipe is non-conductive or lined, grounding rings are used. The grounding ring is similar to an orifice plate with a bore equal to the nominal size (ID) of the flow tube. It is installed between the flanges of the flow tube and adjacent process piping on the upstream and

downstream sides. The flow tube is bonded to the process fluid by being connected to the metallic grounding rings, and is grounded by being wired to a good conductor, such as a cold water pipe.

In larger sizes and in exotic materials, grounding rings can become expensive. A cheaper alternative is to use grounding electrodes. A grounding electrode is a third electrode placed in the flow tube for bonding with the process fluid. Another cost-saving option is to use a plastic grounding ring with a metal electrode insert.

5.11 Vortex Flowmeters

Theodor Von Karman discovered that when a non-streamlined object (also called a bluff body) is placed in the path of a fast-flowing stream, the fluid will alternately separate from the object on its two downstream sides, and, as the boundary layer becomes detached and curls back on itself, the fluid forms vortices (also called whirlpools or eddies). He also noted that the distance between the vortices was constant and depended solely on the size of the rock that formed it (see Figure 5-36).

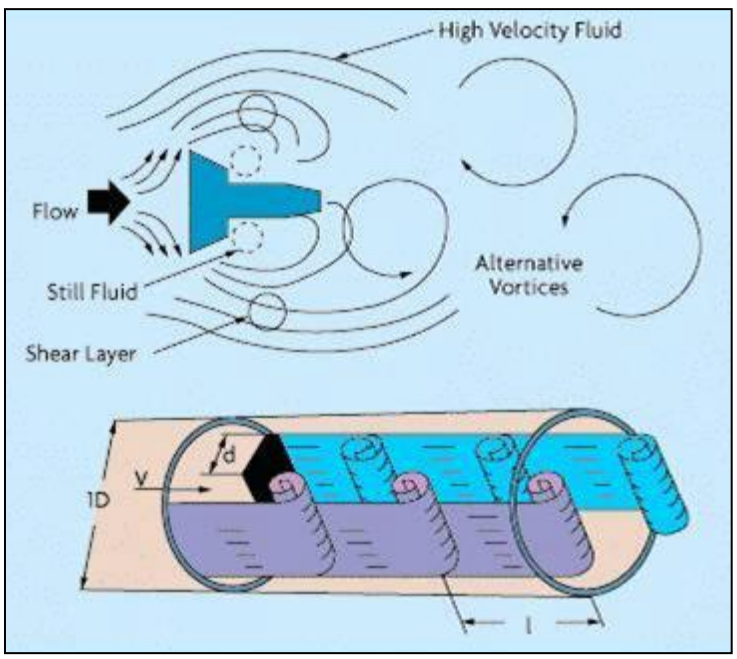

Figure 5-36. Vortex Flowmeter Principle

On the side of the bluff body where the vortex is being formed, the fluid velocity is higher and the pressure is lower. As the vortex moves downstream, it grows in strength and size, and eventually detaches or sheds itself. This is followed by additional vortices being formed on the other side of the bluff body. The alternating vortices are spaced at equal distances.

The vortex-shedding phenomenon can be observed as wind is shed from a flagpole (which acts as a bluff body); this is what causes the regular rippling one sees in a flag. Vortices are also shed from bridge piers, pilings, offshore drilling platform supports, and tall buildings. The forces caused by the vortex-shedding phenomenon must be taken into account when

designing these structures. In a closed piping system, the vortex effect dissipates within a few pipe diameters downstream of the bluff body.

5.11.1 Vortex meter design

A vortex flowmeter is typically made of grade 316 stainless steel or Hastelloy® and includes a bluff body, a vortex sensor assembly, and the transmitter electronics, although the transmitter electronics can also be mounted remotely. Vortex flowmeters are typically available in flange sizes from ½" to 12". The installed cost of vortex meters is competitive with that of orifice meters in sizes less than 6". Wafer body meters (flangeless) have the lowest cost, while flanged meters are preferred if the process fluid is hazardous or is at a high temperature.

Bluff body shapes (square, rectangular, t-shaped, and trapezoidal) and dimensions have been experimented with to achieve the desired characteristics. Testing has shown that linearity, low Reynolds number limitation, and sensitivity to velocity profile distortion vary only slightly with bluff body shape. First, the width of the bluff body must have a large enough fraction of the pipe diameter that the entire flow participates in the shedding. Second, the bluff body must have protruding edges on the upstream face to fix the lines of flow separation, regardless of the flow rate. Third, the bluff body length in the direction of the flow must be a certain multiple of the bluff body width.

Today, the majority of vortex meters use PE or capacitance-type sensors to detect the pressure oscillation around the bluff body (Figure 5-37). These detectors respond to the pressure oscillation with a low voltage output signal having the same frequency as the oscillation. Such sensors are modular, inexpensive, easily replaced, and can operate over a wide range of temperature ranges (from cryogenic liquids to superheated steam). Sensors can be located inside the meter body or outside. Wetted sensors are stressed directly by the vortex pressure fluctuations and are enclosed in hardened cases to withstand corrosion and erosion effects.

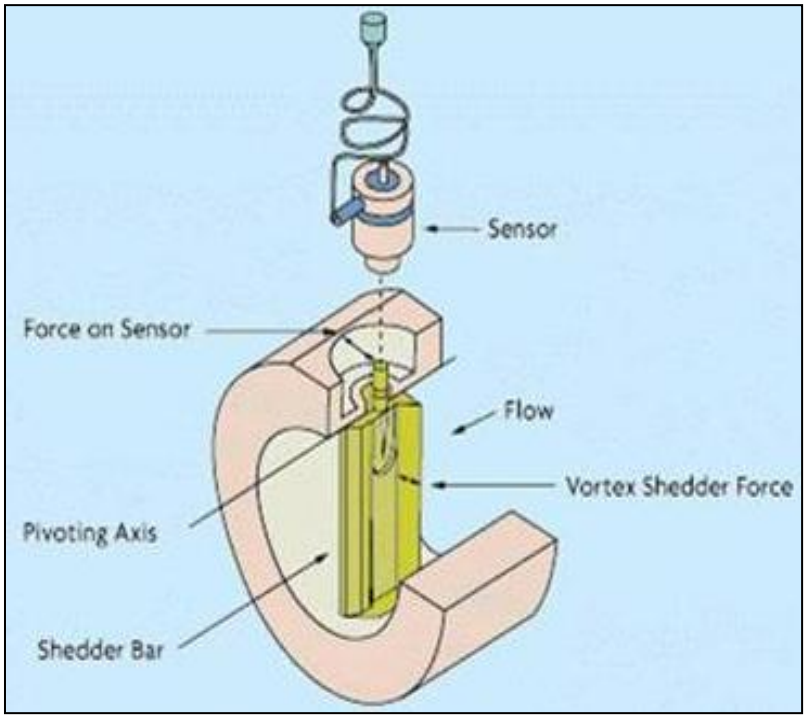

Figure 5-37. Vortex-Detecting Sensor

External sensors, typically PE strain gages, sense the vortex shedding indirectly through the force exerted on the shedder bar. External sensors are preferred on highly erosive/corrosive applications to reduce maintenance costs, while internal sensors provide better rangeability (better low-flow sensitivity). They are also less sensitive to pipe vibrations. The electronics housing is usually rated explosion-and-weatherproof, and contains the electronic transmitter module, termination connections, and an optional flow-rate indicator and/or totalizer.

5.11.2 Sizing

Vortex shedding frequency is directly proportional to the velocity of the fluid in the pipe, and therefore to volumetric flow rate. The shedding frequency is independent of fluid properties such as density, viscosity, and conductivity except that the flow must be turbulent for vortex shedding to occur. The relationship between vortex frequency and fluid velocity is:

$$\boxed{S_t = f\left(\frac{d}{V}\right)} \qquad \text{Eqn. 5-13}$$

where S_t is the Strouhal number;
f is the shedding frequency;
d is the width of the bluff body;
V is the average fluid velocity.

The value of the Strouhal number is determined experimentally, and is generally found to be constant over a wide range of Reynolds numbers. The Strouhal number represents the ratio of the interval between vortex shedding (f) and bluff body width (d), which is about six. The Strouhal number is a dimensionless calibration factor used to characterize various bluff bodies. If their Strouhal number is the same, then two different bluff bodies will perform and behave similarly.

Because the volumetric flow rate Q is the product of the average fluid velocity and of the cross-sectional area available for flow (A):

$$\boxed{Q = AV = \frac{(AfdB)}{S_t}} \qquad \text{Eqn. 5-14}$$

where B is the blockage factor, defined as the open area left by the bluff body divided by the full-bore area of the pipe.

This equation, in turn, can be rewritten as:

$$\boxed{Q = fK} \qquad \text{Eqn. 5-15}$$

where K is the meter coefficient, which equals the product ($A*f*d*B$).

As with turbine and other frequency-producing flowmeters, the K-factor can be defined as pulses per unit volume (pulses per gallon, pulses per cubic foot, etc.). Therefore, one can determine flow rate by counting the pulses per unit time. Vortex frequencies range from one to thousands of pulses per second, depending upon the flow velocity, the character of the process

fluid, and the size of the meter. In gas service, frequencies are about 10 times higher than in liquid applications.

The K-factor is determined by the manufacturer, usually by water calibration in a flow lab. Because the K-factor is the same for liquid, gas, and vapor applications, the value determined from a water calibration is valid for any other fluid. The calibration factor (*K*) at moderate Reynolds numbers is not sensitive to edge sharpness or other dimensional changes that affect square-edged orifice meters.

Although vortex meter equations are relatively simple compared to those for orifice plates, there are many rules and considerations to keep in mind. Manufacturers offer free computer software for sizing, which allows the user to enter fluid properties (density, viscosity, and desired flow range) and the software automatically calculates the meter sizes.

The force generated by the vortex pressure pulse is a function of fluid density multiplied by the square of fluid velocity. The requirement that there be turbulent flow and force sufficient to actuate the sensor determines the meter's rangeability. The force has to be high enough to be distinguishable from noise. For example, a typical 2" vortex meter has a water flow range of 12 to 230 GPM. If the density or viscosity of the fluid differs from that of water, the meter range will change.

In order to minimize measurement noise, it is important to select a meter that will adequately handle both the minimum and maximum process flows to be measured. It is recommended that the minimum flow rate to be measured be at least twice the minimum flow rate detectable by the meter. The maximum capacity of the meter should be at least five times the anticipated maximum flow rate.

5.11.3 Accuracy and rangeability

Because the Reynolds number drops as viscosity rises, vortex flowmeter rangeability suffers as the viscosity rises. The maximum viscosity limit, as a function of allowable accuracy and rangeability, is between 8 and 30 centipoise. One can expect a better than 20:1 rangeability for gas and steam service and over 10:1 for low-viscosity liquid applications if the vortex meter has been sized properly for the application.

The inaccuracy of most vortex meters is 0.5-1%AR for Reynolds numbers over 30,000. As the Reynolds number drops, metering error increases. At Reynolds numbers less than 10,000, error can reach 10%AR.

While most flowmeters continue to give some indication at near-zero flows, the vortex meter is provided with a cut-off point. Below this level, the meter output is automatically clamped at zero. This cut-off point corresponds to a Reynolds number at or below 10,000. If the minimum flow that one needs to measure is at least twice the cut-off flow, then no problem is posed. On the other hand, it can still be a drawback if low flow rate information is desired during start-up, shutdown, or other upset conditions.

5.11.4 Applications and limitations

Vortex meters are not usually recommended for batching or other intermittent flow applications because the dribble flow-rate setting of the batching station can fall below the meter's minimum Reynolds number limit. The smaller the total batch, the more significant the resulting error is likely to be.

Low-pressure (low-density) gases do not produce a strong-enough pressure pulse, especially if fluid velocities are low. Therefore, it is likely that in such services, the rangeability of the meter will be poor and low flows will not be measurable. On the other hand, if reduced rangeability is acceptable and the meter is correctly sized for normal flow, the vortex flowmeter can still be considered.

If the process fluid tends to coat or build-up on the bluff body, as in sludge and slurry service, the meter's K-factor will eventually change. Vortex-shedding flowmeters are not recommended for such applications. If, however, a dirty fluid has only moderate amounts of non-coating solids, the application is likely to be acceptable. This was demonstrated by a 2-year test on a limestone slurry. At the end of the test, the K-factor was found to have changed only 0.3% from the original factory calibration, although the bluff body and flow tube were badly scarred and pitted.

When measuring multi-phase flow, such as solid particles in gas or liquid, gas bubbles in liquid, and liquid droplets in gas, vortex meter accuracy will drop because of the meter's inability to differentiate between the phases. Wet, low-quality steam is one such application; the liquid phase should be homogeneously dispersed within the steam, and vertical flow lines should be avoided to prevent slugging. When the pipe is horizontal, the liquid phase is likely to travel on the bottom of the pipe, and therefore the inner area of the pipe should be kept open at the bottom. This can be achieved by installing the bluff body horizontally. Measurement inaccuracy in such applications is about 5%AR with good repeatability.

The permanent pressure loss through a vortex meter is roughly two velocity heads, about half that of that of an orifice plate. A velocity head is defined as V^2/g, where V is the flow velocity and g is the gravitational constant in consistent units. If the pipe and meter are properly sized and of the same size, the pressure drop is likely to be only a few psi; however, downsizing (installing a smaller-than-line-size meter) in order to increase the Reynolds number can increase the head loss to more than 10 psi. The vena contracta pressure should not be allowed to drop below the vapor pressure of the process fluid, because that would cause cavitation. Naturally, if the back pressure on the meter is below the vapor pressure, the process fluid will flash and the meter reading will not be meaningful.

The main advantages of vortex meters are their low sensitivity to variations in process conditions and low wear relative to orifices or turbine meters. In addition, acquisition and maintenance costs are low. For these reasons, they have been gaining wider acceptance among users.

5.11.5 Installation recommendations

When installing a vortex flowmeter (see Figure 5-38) in an existing process where the flow range is not known, it is recommended to first make some approximate measurements (such as using portable Pitot or clamp-on ultrasonic devices). Otherwise, there is no guarantee that a line-size vortex meter will work at all.

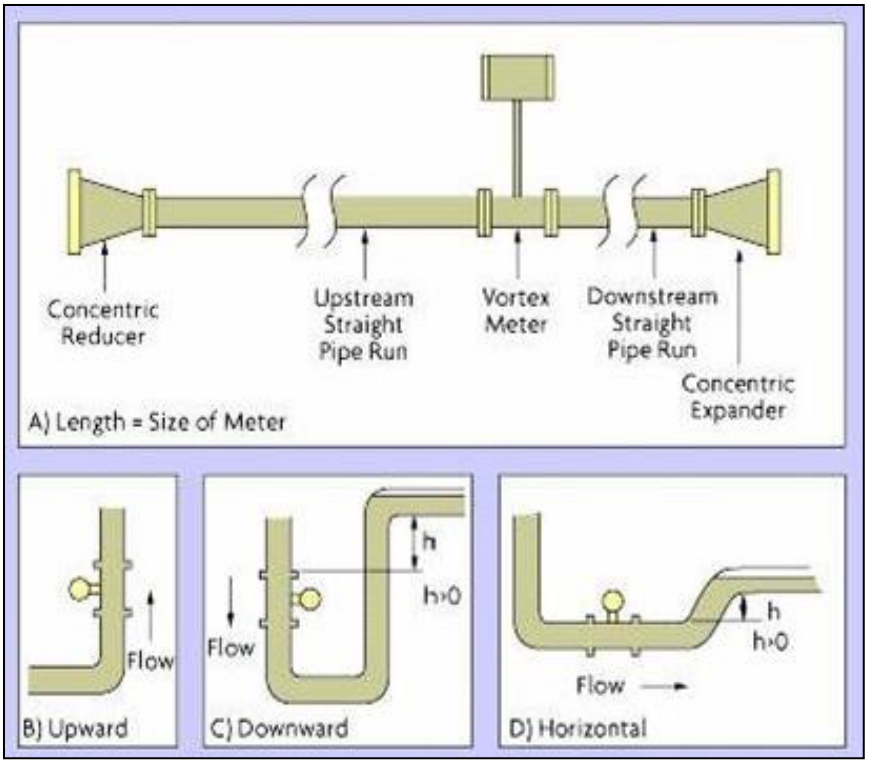

Figure 5-38. Vortex Meter Installation Recommendations

The vortex meter requires a well-developed and symmetrical flow velocity profile that is free from any distortions or swirls. This necessitates the use of straight upstream and downstream piping to condition the flow. The straight length of pipe must be the same size as the meter and its length should be about the same as required for an orifice installation with a beta ratio of 0.7. Most vortex flowmeter manufacturers recommend a minimum of 30 pipe diameters downstream of control valves, and 3 to 4 pipe diameters between the meter and downstream pressure taps. Temperature elements should be small and located 5 to 6 diameters downstream.

About half of all vortex meter installations require “necking down” of oversized process piping by concentric reducers and expanders. Even if flow straighteners are installed, some straight (relaxation) piping will still be required.

Vortex meters can be installed vertically, horizontally, or at any angle, as long as they are kept flooded. The meter can be kept flooded by installing it in a vertical upward flow line. When installing the flowmeter in a downward or horizontal flow, the downstream piping should be kept elevated. Check valves can be used to keep the piping full of liquid when there is no flow. Block and bypass valves are required if the replacement of the sensor in the particular design requires the stopping of the flow and the opening up of the process.

Mating flanges (on the schedule 40 or schedule 80 mating piping) must have the same diameter and smooth bore as the flowmeter. Welded neck flanges are preferred, and reducing flanges should not be used. The inner surface of the mating pipe should be free from mill scale, pits, holes, reaming scores, and bumps for a distance of four diameters upstream and two diameters downstream of the meter. The bores of the meter, the gaskets, and the adjacent piping must be carefully aligned to eliminate any obstructions or steps.

Excessive pipe vibration can be eliminated by supporting the piping on both sides of the meter or by rotating the meter so that the sensor is moved out of the plane of the vibration. Process noise due to valve chattering, steam traps, or pumps can result in high readings or non-zero readings under zero-flow conditions. Most meter electronics allow for increasing the noise filter settings, but increased noise reduction usually also decreases the low-flow sensitivity of the meter. One option is to relocate the meter to a less noisy part of the process.

5.12 Ultrasonic Flowmeters

The speed at which sound propagates in a fluid is dependent on the fluid's density. If the density is constant, however, one can use the time of ultrasonic passage (or reflection) to determine the velocity of a flowing fluid.

Some manufacturers produce transducer systems that operate in the shear-mode, sending a single pulse and receiving a single pulse in return. Narrow-beam systems are commonly subject to "walk-away", where the signal completely misses the downstream transducer. Wide-beam systems overcome beam refraction and work better in changing liquid density and temperature. With the advent of digital signal processing, it is now possible to apply digital signal coding to the transmitted signal, thereby eliminating many of the problems associated with noise and variations in liquid chemistry.

5.12.1 The Doppler shift

In 1842, Christian Doppler discovered that the wavelength of sound perceived by a stationary observer appears shorter when the source is approaching and longer when the source is moving away. This shift in frequency is the basis upon which all Doppler-shift ultrasonic flowmeters work.

Doppler flowmeter transducers operate at 0.640 MHz in clamp-on designs and at 1.2 MHz in wetted sensor designs. The transducer sends an ultrasonic pulse or beam into the flowing stream. The sound waves are reflected back by such acoustical discontinuities as particles, entrained gas bubbles, or even by turbulence vortices. For clamp-on designs, measurement inaccuracy ranges from ±1% to ±5% FS.

The meter detects the velocity of the discontinuities, rather than the velocity of the fluid, in calculating the flow rate. The flow velocity (V) can be determined by

$$\boxed{V = \frac{(f_0 - f_1)C_t}{2 f_0 \cos(a)}} \qquad \text{Eqn. 5-16}$$

where C_t is the velocity of sound inside the transducer;
f_0 is the transmission frequency;
f_1 is the reflected frequency;
a is the angle of the transmitter and receiver crystals with respect to the pipe axis.

Because $C_t/(2f_0 \cos[a])$ is a constant (K), the relationship can be simplified to

$$\boxed{V = (f_0 - f_1)K} \qquad \text{Eqn. 5-17}$$

Thus, flow velocity V (fps) is directly proportional to the change in frequency. The flow (Q in GPM) in a pipe having a certain inside diameter (ID) in inches can be obtained by:

$$Q = 2.45V(ID)^2 = 2.45[(f_0 - f_1)K](ID)^2$$

Eqn. 5-18

The presence of acoustical discontinuities is essential for the proper operation of the Doppler flowmeter. The generally accepted rule of thumb is that for proper signal reflection there should be a minimum of 80-100 mg/l of solids with a particle size of +200 mesh (+75 micron). In the case of bubbles, 100-200 mg/l with diameters between +75 and +150 microns is desirable. If either the size or the concentration of the discontinuities changes, the amplitude of the reflected signal will shift and introduce errors.

Doppler flowmeters are often used to measure the flow of such fluids as slurries. If the solids concentration is too high (in excess of 45% by weight), or if too much air or gas is entrained (especially if the bubbles are very fine), these discontinuities will attenuate the reflected Doppler signal to the point where it cannot be distinguished from the background noise in the pipe. Figure 5-39 provides layouts of a Doppler shift and a transit time flowmeter.

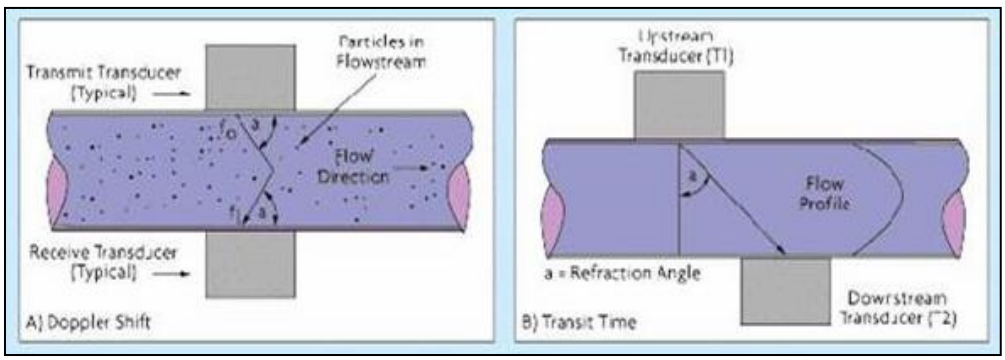

Figure 5-39. Ultrasonic Flowmeter Designs

The reflected Doppler signal is shifted from the transmitted frequency by approximately 6 Hz for every fps of velocity. Therefore, if the flow velocity is less than 1 fps, ultrasonic flowmetering is not practical. There seems to be no upper limit to detectable flow velocity, as successful installations at velocities in the 40-50 fps range are well documented.

5.12.2 Transit time measurement

In this design, the time of flight of the ultrasonic signal is measured between two transducers; one is upstream and the other is downstream. The difference in elapsed time going with or against the flow determines the fluid velocity.

When the flow is zero, the time for the signal T_1 to get to T_2 is the same as that required to get from T_2 to T_1. When there is flow, the effect is to boost the speed of the signal in the downstream direction, while decreasing it in the upstream direction. The flowing velocity (V_f) can be determined by the following equation:

$$V_f = K\left(\frac{dt}{T_L}\right)$$

Eqn. 5-19

where K is a calibration factor for the volume and time units used;
dt is the time differential between upstream and downstream transit times;
T_L is the zero-flow transit time.

Theoretically, transit-time ultrasonic meters can be very accurate; an accuracy of ±0.1%AR is sometimes claimed. Yet the error in these measurements is limited by both the ability of the signal processing electronics to determine the transit time and by the degree to which the sonic velocity (c) is constant. The speed of sound in the fluid is a function of both density and temperature. Therefore, both have to be compensated for. In addition, the change in sonic velocity can change the refraction angle (a) (in Figure 5-39), which in turn will affect the distance the signal must travel. In extreme cases, the signal might completely miss the downstream receiver. Again, this type of failure is known as walk-away.

5.12.3 Design variations

Clamp-on ultrasonic meters (Figure 5-40) come in either single or dual-sensor versions. In the single-sensor version, the transmit and receive crystals are potted into the same sensor body, which is clamped onto a single point of the pipe surface. In the dual-sensor version, the transmit crystal is in one sensor body, while the receive crystal is in another sensor body.

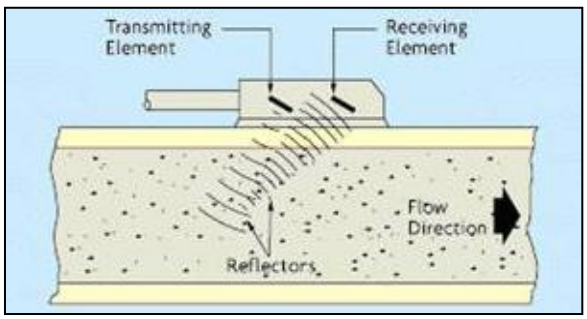

Figure 5-40. Clamp-On Ultrasonic Flowmeter

Clamp-on transit time meters have been available since the early 1970s. The goal of these meters is to rival the performance of wetted spool-piece designs (Figure 5-41), but without the need to break the pipe or stop the process to install the meter. This goal has not yet been reached.

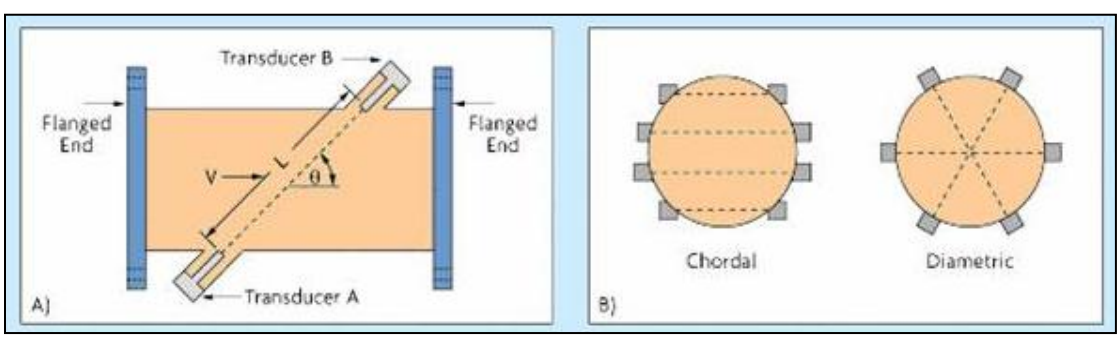

Figure 5-41. Spool-Piece Design

Clamp-on Doppler flowmeters are subject to interference from the pipe wall and from any air space between the sensor and the wall. If the pipe wall is made of stainless steel, it might conduct the transmit signal far enough so that the returning echo will be shifted enough to

interfere with the reading. There are also built-in acoustic discontinuities in concrete-lined, plastic-lined, and fiberglass-reinforced pipes. These are significant enough to either completely scatter the transmitted signal or attenuate the return signal. This dramatically decreases flowmeter accuracy to only ±20%) and, in most cases, clamp-on meters will not work at all if the pipe is lined.

Wetted transducer designs (both Doppler and transit time designs are available) overcome many of these signal attenuation limitations. The full-pipe transit-time meter originally consisted of a flanged spool section with wetted transducers mounted in the pipe wall; the transducers were in transducer wells opposite to one another but at 45° angles to the flow. Transit-time flowmeters are either single-path or multi-path designs.

Single-path flowmeters are provided with a single pair of transducers that make a single-line velocity measurement. They use a meter factor that is pre-determined by calibration to compensate for variations in velocity profile and for flow section construction irregularities.

In the design of multi-path flowmeters, several sets of transducers are placed in different paths across the flow section, thereby attempting to measure the velocity profile across the entire cross-section of the pipe. Multi-path instruments are used in large-diameter conduits, such as utility stacks and in other applications where non-uniform flow velocity profiles exist.

Transit-time meters can also be used to measure both very hot fluids (e.g., liquid sulfur) and very cold fluids (liquid nitrogen); they can also detect very low flows. Wetted-transducer designs for small pipes (down to ½ inch) are called axial or co-axial designs. These devices (see Figure 5-42) permit transit-time measurement along a path length significantly greater than the diameter of the pipe, thereby increasing low-flow sensitivity.

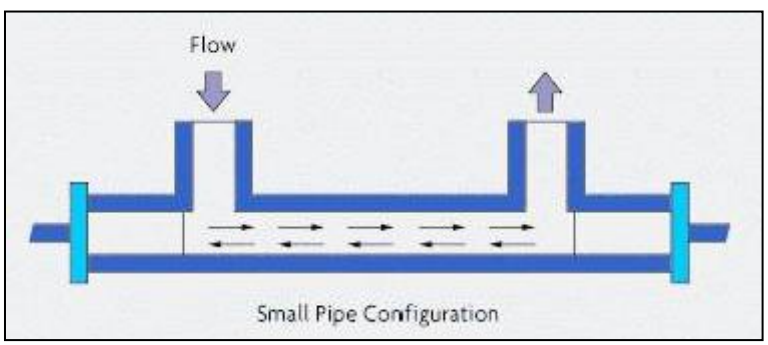

Figure 5-42. Axial Flowmeter

Originally, ultrasonic flowmeters were divided into those using the Doppler-shift principle and those using the transit-time principle. More recently, flowmeters are capable of measuring the flow of both clean fluids and slurries with entrained solids or other acoustical discontinuities. Microprocessors have made it possible to switch automatically from clean fluid mode to particulate mode based on the “correlation factor”. This figure of merit dramatically improves the accuracy of overall performance. In some carefully engineered applications, installed accuracy to within 0.5%AR has been reported.

5.12.4 Applications and performance

Doppler flowmeters are not recommended for clean fluid applications. Transit-time flowmeters, on the other hand, are often used to measure the flow of crude oils and simple

fractions in the petroleum industry. They also work well with viscous liquids, provided the Reynolds number at minimum flow is either less than 4000 (laminar flow) or greater than 10,000 (turbulent flow). Serious non-linearities are present in the transition region as seen in Figure 5-43 below.

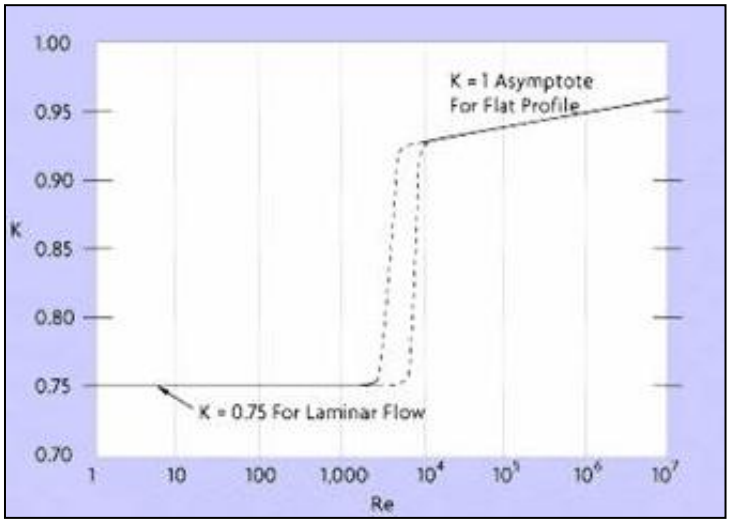

Figure 5-43. K-Factor Variation Versus Re-Number

Transit-time flowmeters are the standard for measuring cryogenic liquids down to -300°C and are used in molten metal flowmetering. Measurement of liquid argon, liquid nitrogen, liquid helium, and molten sulfur has often been reported. Spool-section-type flowmeters are most often used for these applications, especially the axial and co-axial designs.

Raw wastewater applications usually have too few acoustic discontinuities for Doppler flowmeters. On the other hand, raw wastewater is not always clean enough for transit-time measurement. Other wastewater-related applications are equally problematic because the solids concentration can be too high for either transit-time or Doppler flowmeters to work properly. In still other wastewater applications, the problem is that the acoustical absorbency of the mostly organic solids in wastewater attenuates the ultrasonic signals.

The use of multi-path flowmeters in raw wastewater and storm water applications is common, while Doppler or cross-correlation hybrid designs are most often used to measure activated sludge and digested sludge flows.

For mining slurries, Doppler flowmeters typically work well. Among the few problem applications are those in high-density polyethylene pipe, because the pipe wall flexes enough to change the diameter of the measurement area. Therefore, the accuracy of the meter is reduced. In addition, the flexure of the pipe wall can often cause failure by breaking the acoustic coupling of the transducer to the outside of the pipe. Another problem area is the measurement of acoustically absorbent slurries such as lime or kaolin slurries. These applications fail because highly absorbent solids attenuate the signal below that of usable strength. Lower frequency (0.45 MHz) sensors have been tried for these applications with varying degrees of success.

Multi-path, transit-time flowmeters also measure stack gas flows in power-plant scrubbers, even in very large diameter stacks.

5.13 Mass Flowmeters

From a production plant point of view, mass flow measurement is the basis of most recipe formulations, material balance determinations, and billing and custody transfer operations throughout industry. Since these flow measurements are the most critical in a processing plant, the reliability and accuracy of mass flow detection are very important.

In the past, mass flow was often calculated from the outputs of a volumetric flowmeter and a densitometer. Density was either directly measured or was calculated using the outputs of process temperature and pressure transmitters. These measurements were not very accurate, because the relationships between process pressure (or temperature) and density are not always precisely known; each sensor adds its own separate error to the overall measurement error, and the speed of response of such calculations is usually not sufficient to detect step changes in flow.

One of the early designs of self-contained mass flowmeters (Figure 5-44) operated using angular momentum. This design had a motor-driven impeller that imparted angular momentum (rotary motion) by accelerating the fluid to a constant angular velocity. The higher the density, the more angular momentum was required to obtain this angular velocity. Downstream of the driven impeller, a spring-held stationary turbine was exposed to this angular momentum. The resulting torque (spring torsion) was an indication of mass flow.

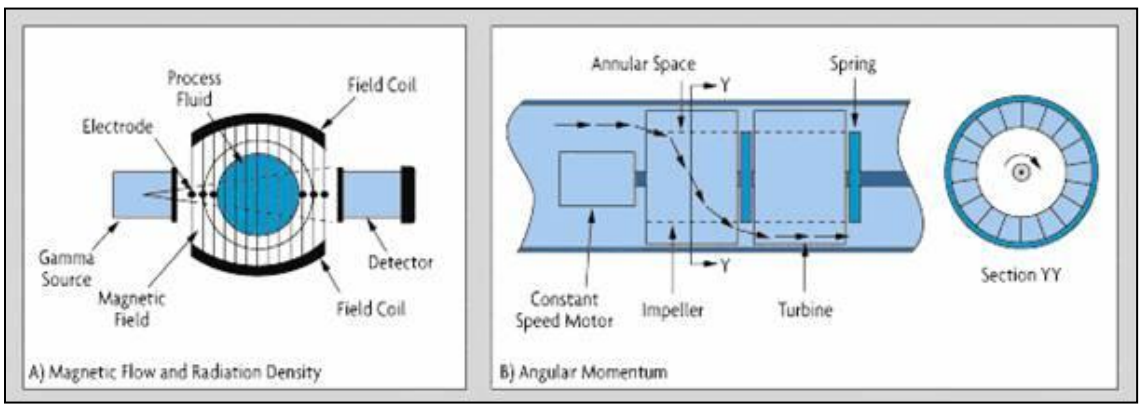

Figure 5-44. Mass Flowmeter

These meters had moving parts and complex mechanical designs. They were first developed for the measurement of aircraft fuel, some are still in use; however, because of their complex nature and high maintenance costs of angular momentum flowmeters, they are gradually being replaced by designs that are more robust and require less maintenance.

Mass flow also can be measured by batch weighing or by combining an accurate level sensor with a densitometer. Another method is to mount two D/P transmitters on the lower part of an atmospheric tank at different elevations. In this case, the output of the top D/P cell will vary with the level in the tank, while the lower one will measure the hydrostatic head over a fixed elevational distance. This pressure differential yields the density of the material in the tank. Such systems have been used to measure the total mass flow of slurries.

5.13.1 Coriolis mass flowmeters

It was the French engineer G. G. Coriolis who first noted that all bodies moving on the surface of the Earth tend to drift sideways because of the eastward rotation of the planet. In the

northern hemisphere, the deflection is to the right of the motion; in the southern hemisphere, it is to the left. This drift plays a principle role in both the tidal activity of the oceans and the weather of the planet.

Because a point on the equator traces out a larger circle per day than a point nearer the poles, a body traveling towards either pole will bear eastward, because it retains its higher (eastward) rotational speed as it passes over the more slowly rotating surface of the earth. This drift is defined as the Coriolis force.

The first industrial Coriolis patents date back to the 1950s, and the first Coriolis mass flowmeters were built in the 1970s. These flowmeters artificially introduce a Coriolis acceleration into the flowing stream and measure mass flow by detecting the resulting angular momentum.

When a fluid is flowing in a pipe and it is subjected to Coriolis acceleration through the mechanical introduction of apparent rotation into the pipe, the amount of deflecting force generated by the Coriolis inertial effect will be a function of the mass flow rate of the fluid. If a pipe is rotated around a point while liquid is flowing through it (toward or away from the center of rotation), that fluid will generate an inertial force (acting on the pipe) that will be at right angles to the direction of the flow.

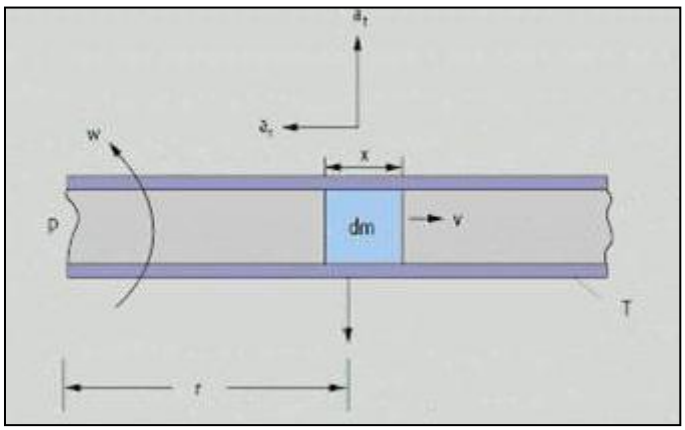

Figure 5-45. The Coriolis Principle

A particle (*dm*) travels at a velocity (*V*) inside a tube (*T*). The tube is rotating about a fixed point (*P*), and the particle is at a distance of one radius (*R*) from the fixed point. The particle moves with angular velocity (*w*) under two components of acceleration, a centripetal acceleration directed toward *P* and a Coriolis acceleration acting at right angles to a_r:

$$a_r(centripetal) = w^2 r$$
$$a_t(Coriolis) = 2wv$$

Eqn. 5-20

In order to impart the Coriolis acceleration (a_t) to the fluid particle, a force of a_t (*dm*) has to be generated by the tube. The fluid particle reacts to this force with an equal and opposite Coriolis force.

$$F_c = a_t(dm) = 2wv(dm)$$ Eqn. 5-21

Then, if the process fluid has density *D* and is flowing at constant speed inside a rotating tube of cross-sectional area *A*, a segment of the tube of length *x* will experience a Coriolis force of magnitude

$$F_c = 2wvDAx$$ Eqn. 5-22

Because the mass flow rate is $dm = DvA$, the Coriolis force $F_c = 2w(dm)x$

$$Mass\ Flow = \frac{F_c}{(2wx)}$$ Eqn. 5-23

This is how measurement of the Coriolis force exerted by the flowing fluid on the rotating tube can provide an indication of mass flow rate. Naturally, rotating a tube is not practical when building a commercial flowmeter, but oscillating or vibrating the tube can achieve the same effect. Coriolis flowmeters can measure flow through the tube in either the forward or the reverse direction.

In most designs, the tube is anchored at two points and vibrated between these anchors. This configuration can be envisioned as vibrating a spring and mass assembly. Once placed in motion, a spring and mass assembly will vibrate at its resonant frequency, which is a function of the mass of that assembly. This resonant frequency is selected because the smallest driving force is needed to keep the filled tube in constant vibration.

5.13.2 Tube designs

A tube can be of a curved or straight form, and some designs can be self-draining when mounted vertically. When the design consists of two parallel tubes, flow is divided into two streams by a splitter near the meter's inlet and is recombined at the exit. In the single continuous tube design (or in two tubes joined in series), the flow is not split inside the meter.

In either case, drivers vibrate the tubes. These drivers consist of a coil connected to one tube and a magnet connected to the other. The transmitter applies an AC to the coil, which causes the magnet to be attracted and repelled by turns, thereby forcing the tubes towards and away from one another. The sensor can detect the position, velocity, or acceleration of the tubes. If electromagnetic sensors are used, the magnet and coil in the sensor change their relative positions as the tubes vibrate, causing a change in the magnetic field of the coil. Therefore, the sinusoidal voltage output from the coil represents the motion of the tubes.

When there is no flow in a two-tube design, the vibration caused by the coil and magnet drive results in identical displacements at the two sensing points (B1 and B2). When flow is present, Coriolis forces act to produce a secondary twisting vibration, resulting in a small phase difference in the relative motions. This difference is detected at the sensing points. The deflection of the tubes caused by the Coriolis force exists only when both axial fluid flow and tube vibration are present. Vibration at zero flow, or flow without vibration, does not produce an output from the meter.

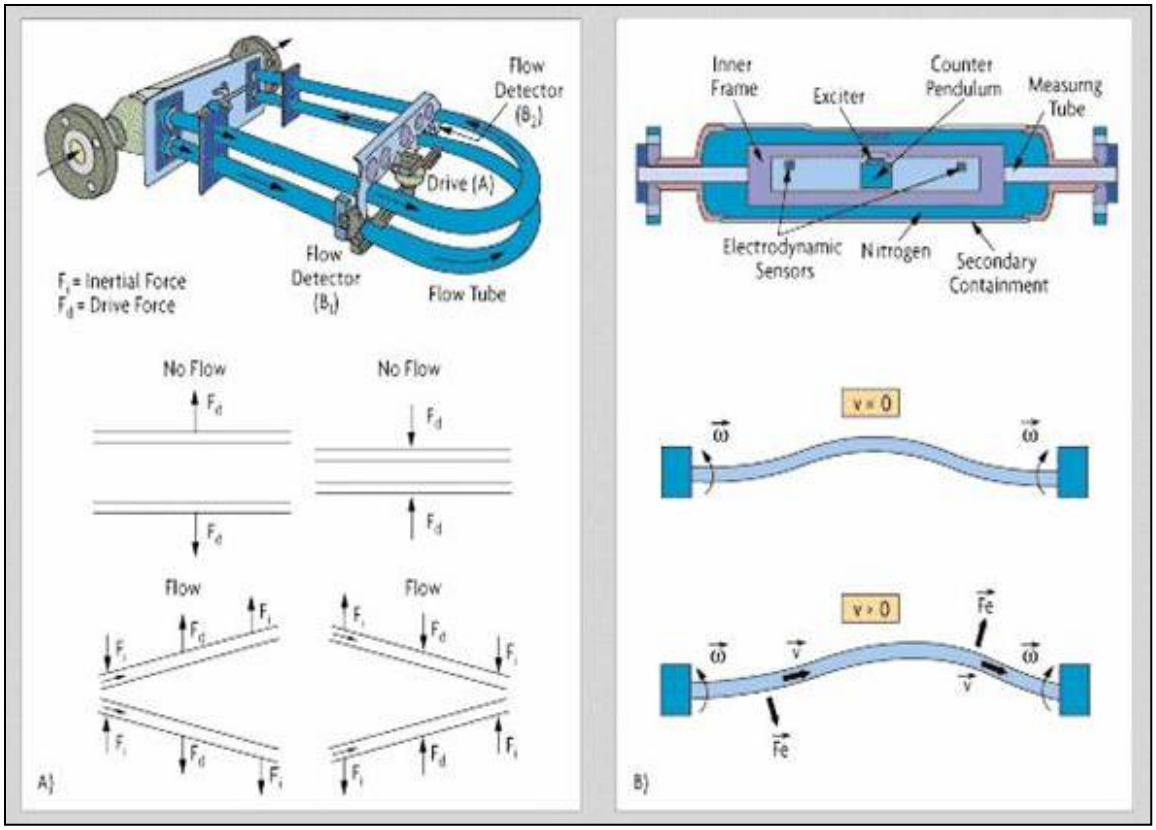

Figure 5-46. Coriolis Metering

The natural resonance frequency of the tube structure is a function of its geometry, materials of construction, and the mass of the tube assembly (mass of the tube plus the mass of the fluid inside the tube). The mass of the tube is fixed. Since mass of the fluid is its density (*D*) multiplied by its volume (which is also fixed), the frequency of vibration can be related to the density of the process fluid (*D*). Therefore, the density of the fluid can be determined by measuring the resonant frequency of oscillation of the tubes. Note that density can be measured at zero flow as long as the tubes are filled with fluid and vibrating.

Wall thickness varies considerably from design to design; however, even the sturdiest tubing will be thinner than the process piping. In addition, some designs use small bore tubing, which drastically increases the flowing velocity (from 5-10 fps to more than 25 fps). Designs with thin walls and high fluid velocities (that is, small-bore tubing) may require the use of exotic materials because of erosion concerns. The longest meter life will be obtained by selecting the design with the thickest wall and the slowest flow velocity that can provide the required accuracy and range.

The Coriolis meter may need to be made out of exotic materials because of corrosion considerations or to prevent pitting. Carbon or stainless steel can often be used in process piping, because a small amount of pitting can be tolerated. In case of the Coriolis meter, even a small amount of pitting cannot be tolerated because the walls are thin and pitting induces stress concentrations within the tube structure. Therefore, standard corrosion tables (based on weight loss criteria) are not suitable for selecting Coriolis tube materials, and so the stricter guidelines of the manufacturers must be used.

5.13.3 Transmitter designs

Transmitters can operate on either AC or DC power and require separate wiring for the power supply and output signals. The Coriolis flowmeter transmitter (see Figure 5-47) can be integrally or remotely mounted. The transmitter controls the operation of the driver and processes and transmits the sensor signals. The calibration factor (*K*) in the transmitter's memory matches the transmitter to the particular flow tube. This calibration factor defines the constant of proportionality between the Coriolis force and the mass flow rate for the dynamic spring constant of the particular vibrating tubes.

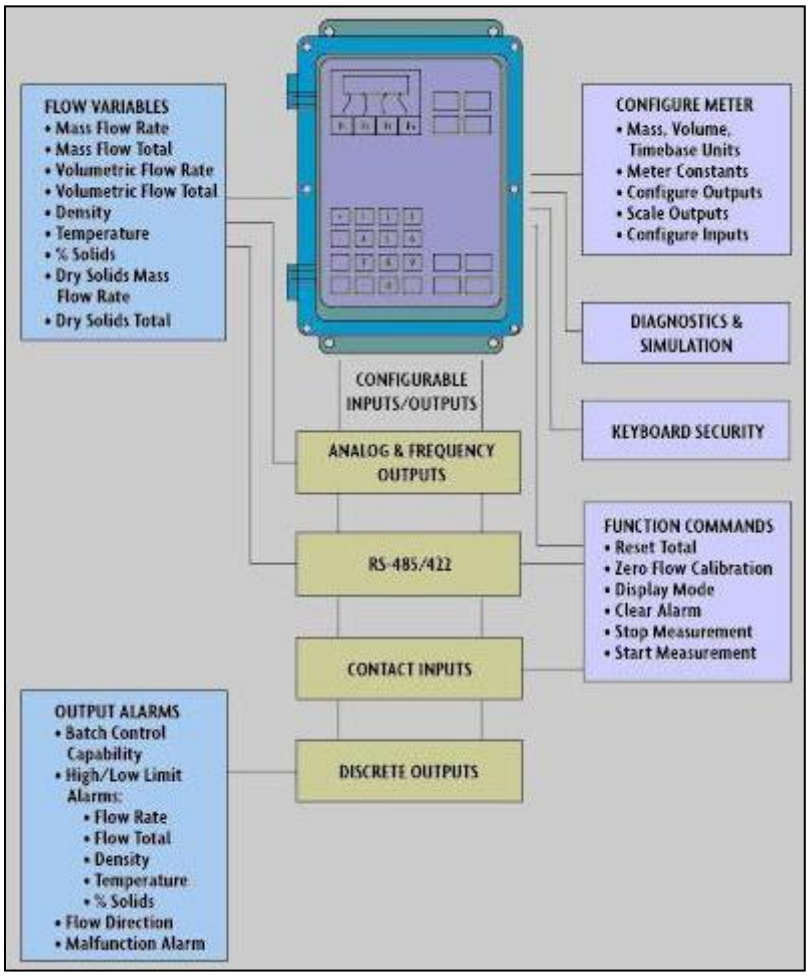

Figure 5-47. Coriolis Transmitter

The transmitter does more than convert sensor inputs into standardized output signals. Most transmitters also offer multiple outputs, including mass flow rate, total mass flow, density, and temperature. Analog and/or pulse outputs are both available, and intelligent transmitters can generate digital outputs.

Transmitters are often provided with local displays and keypads to allow easy access to process data. Coriolis transmitters provide more than just flow information and ancillary functions. When viscosity information is desired, the meter pressure drop needs to be measured. Other features may require information to be pre-programmed into the transmitter memory. In

addition, transmitters have other hardware and software options that allow the user to customize them to the application.

5.13.4 Coriolis evolution

The first generation of Coriolis meters consisted of a single curved and thin-walled tube in which high fluid velocities were created by reducing the tube cross-sectional area in relation to the process pipe. The tube distortion was measured in reference to a fixed point or plane. The tubes were excited in such a way that localized high-amplitude bending forces were created at the anchor points, resulting in severe vibration problems; the problems were alleviated by two-tube designs.

These designs reduced external vibration interference, decreased the power needed to vibrate the tubes, and minimized the vibrational energy leaving the tube structure. One driver was used to initiate tube vibration, and two sensors were used to detect the Coriolis deflections. While this design greatly improved performance, the combination of reduced bore, thin-walled tubing, and high fluid velocities (up to 50 fps) still resulted in premature meter failure. These failures included potentially catastrophic spills when the meter was used on corrosive and erosive services. In addition, the unrecovered head losses were high (sometimes over 50 PSID), and accuracy was not high enough to allow users to convert batch processes into continuous ones.

More recent design improvements include the use of multiple drivers, the introduction of a variety of new tube shapes, including ones that do not split the flow. Improvements in performance have been made by using thick-walled tubing (five times thicker than early designs), the use of full-bore diameters and heavy manifolds to isolate the tube structure from stresses induced from piping connections, and flow tube housings that double as secondary containment vessels.

In some designs, torsional stresses replaced bending, in order to prevent the concentration of stresses that can lead to tube cracking (Figure 5-48). In other designs, the effects of pipeline vibration have been minimized by mounting the tube structures transverse to the pipeline.

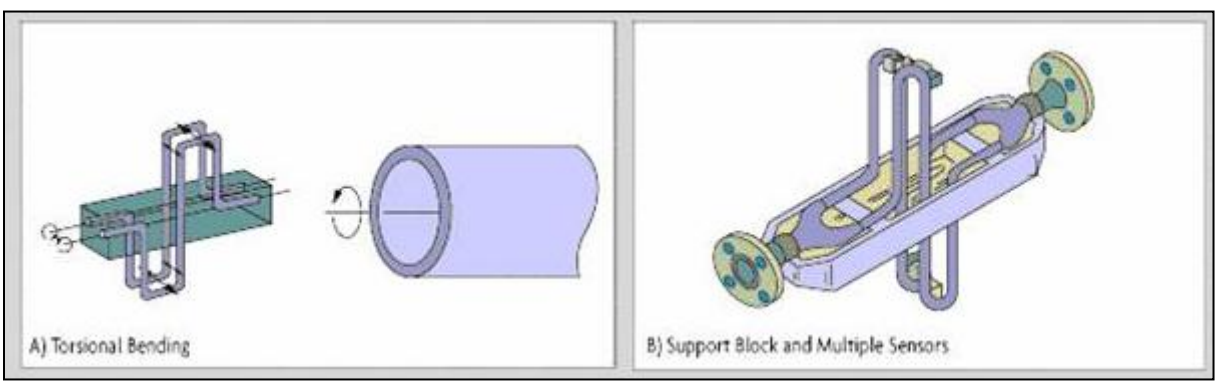

Figure 5-48. Coriolis Design Improvements

The above mentioned improvements increased the number of suppliers and contributed to the development of a new generation of Coriolis meters that are as reliable and rugged as traditional volumetric flowmeters. The new designs operate at lower fluid velocities (below 10 fps) and at lower pressure drops (under 12 PSID), can be installed in any orientation, and provide

longer service life on slurry, viscous, corrosive, or erosive services. The tubes are vibrated well below their endurance limits and typically are made of stainless steel, Hastelloy, and titanium.

5.13.5 Interferences

The effect of the Coriolis force on the vibrating tube is small. An FS flow might cause a deflection of only 0.001". To obtain a flow rangeability of 100:1, sensors must be able to detect deflections to an accuracy of 0.000001" in industrial environments where the process pressure, temperature, and fluid density are all changing, and where pipe vibration interferes with measurement.

The elasticity of metal tubes changes with temperature, becoming more elastic as they get warmer. To eliminate the corresponding measurement error, the tube temperature is continuously measured by an RTD element and is used to continuously compensate for variations in tube elasticity.

Coriolis mass flowmeters usually are calibrated on water, because the constants are valid for all other liquids. Calibration for density is usually done by filling the tubes with two or more (stagnant) calibration fluids of known densities.

5.13.6 Accuracy and rangeability

Coriolis meters provide 0.1 to 2%AR inaccuracy over a mass flow range of up to 100:1. In general, curved tube designs provide wider rangeability (100:1 to 200:1), while straight-tube meters are limited to between 30:1 and 50:1 and have lower accuracy. Overall meter error is the sum of base inaccuracy and zero-shift error, the error attributable to the irregular output signal generated at zero flow conditions. Zero-shift error becomes the dominant portion of total error at the lower end of the flow range, where the error is between 1 and 2%AR. Some manufacturers state the overall accuracy as a %AR for the upper portion of the flow range and as a percentage of span for the lower portion, while others state it as a %AR plus a zero-shift error. When used for density measurement, the typical error range of a Coriolis measurement is 0.002 to 0.0005 g/cc.

Errors are caused by air or gas pockets in the process fluid. In the case of homogeneously dispersed small bubbles, more power is required to vibrate the tubes; however, if the gas phase separates from the liquid, a damping effect on tube vibration develops and (consequently) an error develops. Small voids also cause noise because of the sloshing of the process liquid in the tubes. Larger voids will raise the energy required to vibrate the tubes to excessive levels and may cause complete failure.

The flow tube is subjected to axial, bending, and torsional forces during meter operation. If these forces are altered by process or ambient temperature and pressure fluctuations, performance may be affected and re-zeroing of the meter may be required.

Variations in the density of the process fluid can affect the frequency transfer function of mechanical systems, necessitating the re-zeroing of older designs to protect them from degraded performance. Because of their tube configurations, newer designs are unaffected by density changes over wide ranges of SG variations.

5.13.7 Sizing and pressure drop

Because of the wide rangeability of Coriolis flowmeters (30:1 to as high as 200:1), the same flow can be measured by two or three different sized flow tubes. Using the smallest

possible meter will lower the initial cost and reduce coating build-up, but will increase erosion/corrosion rates and head loss, resulting in increased pumping and operating costs.

Downsizing (using a meter that is smaller than the pipe) is acceptable when the pipe is oversized and the process fluid is clean with a low viscosity. Downsizing is not recommended on corrosive, viscous, or abrasive slurry services. A list of acceptable flow tube sizes and corresponding pressure drops, inaccuracies, and flow velocities can be obtained from software provided by the manufacturer.

Different Coriolis meters incur different pressure drops, but in general, they require more than traditional volumetric meters, which usually operate at less than 10 PSID; the yearly electricity cost of pumping 1 GPM across a differential of 10 PSID is minimal. This higher head loss is due to the reduced tubing diameter and the circuitous path of flow. Besides pumping costs, head loss can be of concern if the meter is installed in a low-pressure system, if there is a potential for cavitation or flashing, or if the fluid viscosity is very high.

The viscosity of non-Newtonian fluids is a function of their flowing velocity. Dilettante fluids, for example, increase their apparent viscosity (resistance to flow) as their velocity is increased. This apparent viscosity can be drastically higher than their viscosity when stagnant. In order to provide suppliers with data on the flowing viscosity in a particular pipe, head loss per foot of pipe (used in pump sizing calculations) can be used as an approximation.

5.13.8 Applications and limitations

Coriolis mass flowmeters can detect the flow of all liquids, including Newtonian and non-Newtonian, as well as that of moderately dense gases. Self-draining designs are available for sanitary applications that meet CIP requirements.

Most meters are provided with intrinsically safe circuits between the flow tube and the transmitter. Therefore, the amount of driving power that can be delivered to the flow tube is limited.

When fluid is unloaded from tank trucks, drums, or railroad cars, slug flow can occur, making the meter output unpredictable. If a slug-flow recovery feature is provided in the transmitter, it will stop the measurement when slug flow is detected by the excessive drive power drawn or by the drop in process density (reduction in sensor output amplitude).

The amount of air in the process fluid that can be tolerated by a meter varies with the viscosity of the fluid. Liquids with viscosities as high as 300,000 centipoise can be metered with Coriolis meters. Gas content in such highly viscous liquids can be as high as 20% with the small bubbles still remaining homogeneously dispersed. Gas content in low viscosity fluids, like milk, will separate at concentrations as low as 1%.

These mass flowmeters provide short payback periods on applications where measurement accuracy lowers production costs (bathing, billing) or where multiple measurements (including density, temperature, and pressure) are needed. On the other hand, they may not be competitive when used in simple flow measurement applications where volumetric sensors are sufficient and where repeatability is more important than precision. The ability to extract data on total mass charged, solids rate, % solids, and viscosity from a single instrument does lower the total cost of measurement, improves process control, and provides redundancy for other instruments.

Continuous tube designs are generally preferred for slurry and other multi-phase fluid applications. The total flow is divided by splitters in split-tube designs, and the resulting two streams do not have to be at exactly the same mass flow rate to maintain accuracy; they do, however, need to have the same density. Different densities in the two parallel tubes imbalance the system and create measurement errors. Therefore, if there is a secondary phase in the stream, a simple flow splitter may not evenly distribute the flow between the two tubes.

Continuous tube designs are also preferred for measuring fluids that can coat and/or clog the meter. Continuous tubes, if sized to pass the largest solid particles in the process fluid, are less likely to clog and are easier to clean.

Straight-tube designs can be cleaned by mechanical means, while curved-tube designs are usually washed out using cleaning solutions at velocities in excess of 10 fps. Straight-tube designs also are preferred for sanitary applications due to self-draining requirements.

Long, bent tubes twist more easily than short, straight tubes and will generate stronger signals under the same conditions. In general, curved-tube designs provide wider rangeability (100:1 to 200:1), while straight-tube meters are limited to 30:1 to 50:1, with lower accuracy.

Straight-tube meters are more immune to pipeline stresses and vibration, are easy to install, require less pressure drop, can be mechanically cleaned, are more compact, and require less room for installation. They are also preferred on services where the process fluid can solidify at ambient temperatures.

Not all meter housings are designed to withstand and contain the pressurized process fluid in case of tube rupture, particularly if the process fluid is likely to vaporize under such conditions. If that is the case, secondary containment housings can be ordered that enclose the entire flow tube, including its housing. Such secondary containment enclosures can be provided with rupture disks or pressure relief valves and with drains or vents.

5.13.9 Installation recommendations

There are no Reynolds number limitations associated with Coriolis meters. They are also insensitive to velocity profile distortion and swirl. Therefore, there is no requirement for straight runs of relaxation piping upstream or downstream of the meter to condition the flow.

The meter should be installed so that it will remain full of liquid so that air cannot get trapped inside the tubes. In sanitary installations, the meter must also drain completely. Although installations in horizontal lines are also acceptable, the most desirable installation is in vertical, upward flow pipes. Installations where the flow is downward in a vertical pipe are not recommended.

In newer Coriolis designs, normal pipe vibration should not affect the performance of the Coriolis meter if it is properly supported by the process piping. No special supports or pads are needed for the flow tube, but standard piping-supports should be located on either side of the meter. If the installation instructions require special hardware or supports, the particular meter design is likely to be sensitive to vibration, and the pulsation dampeners, flexible connectors, and mounting/clamping attachments recommended by the manufacturer should be carefully installed.

If the application requires installation of two Coriolis flowmeters in series or mounting two Coriolis meters near each other, the manufacturer should be consulted to prevent crosstalk between the two units.

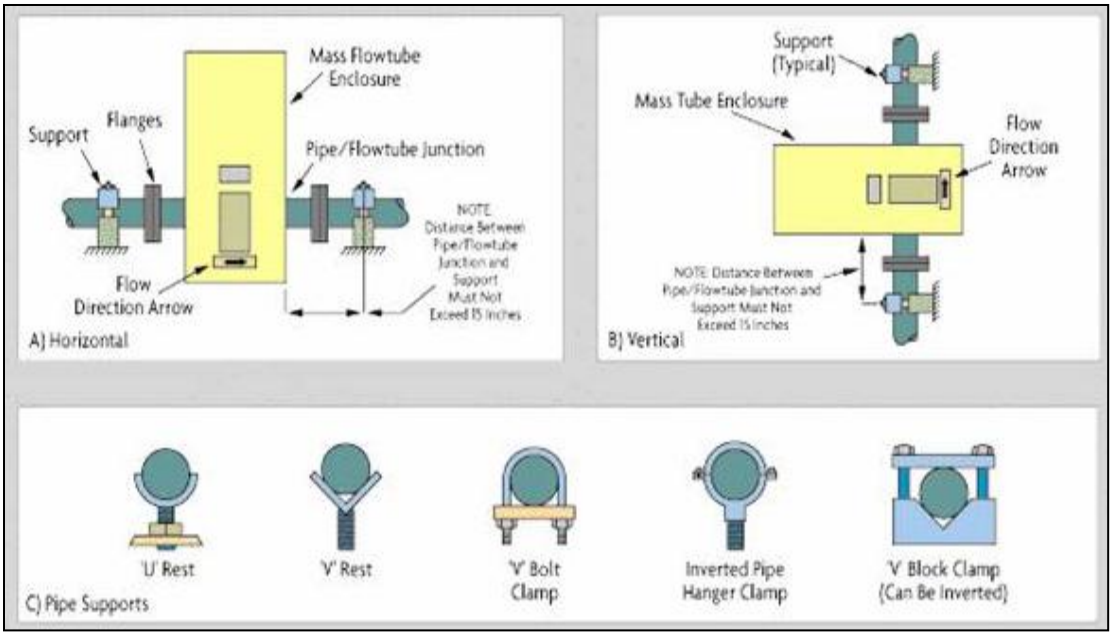

Figure 5-49. Coriolis Meter Installations

If air bubbles are likely to be present in the process fluid, it is recommended to install an air release unit upstream of the meter. System design characteristics that can result in the presence of air (and that can often be eliminated at the design stage) include:

a. common piping used for pumping into and out of storage tanks;

b. allowing the formation of a vortex in stirred vessels under low-level conditions;

c. allowing air leakage through packing glands of pumps that develop high vacuums on the suction side (this can occur when pumping from underground storage);

d. vaporization of stagnant process fluid in pipes exposed to the sun;

e. high valve pressure drops causing vaporization and flashing;

f. allowing the pipe to drain for any reason, including lack of check valves;

g. allowing storage tanks, trucks, or railroad cars to drain completely;

h. using the same pipe for pumping different materials at different times;

i. allowing foam formation by high turbulence in high-velocity fluids.

It is recommended to install (upstream of the meter) strainers, filters, or air/vapor eliminators as required to remove all undesirable secondary phases. Figure 5-50 illustrates an air eliminator installation. Its function is to slow the velocity of the liquid, thereby allowing time for the entrained air to separate and be removed by venting. The rise and fall of the liquid level in the eliminator due to the accumulation of free air closes and opens the vent valve and discharges the air.

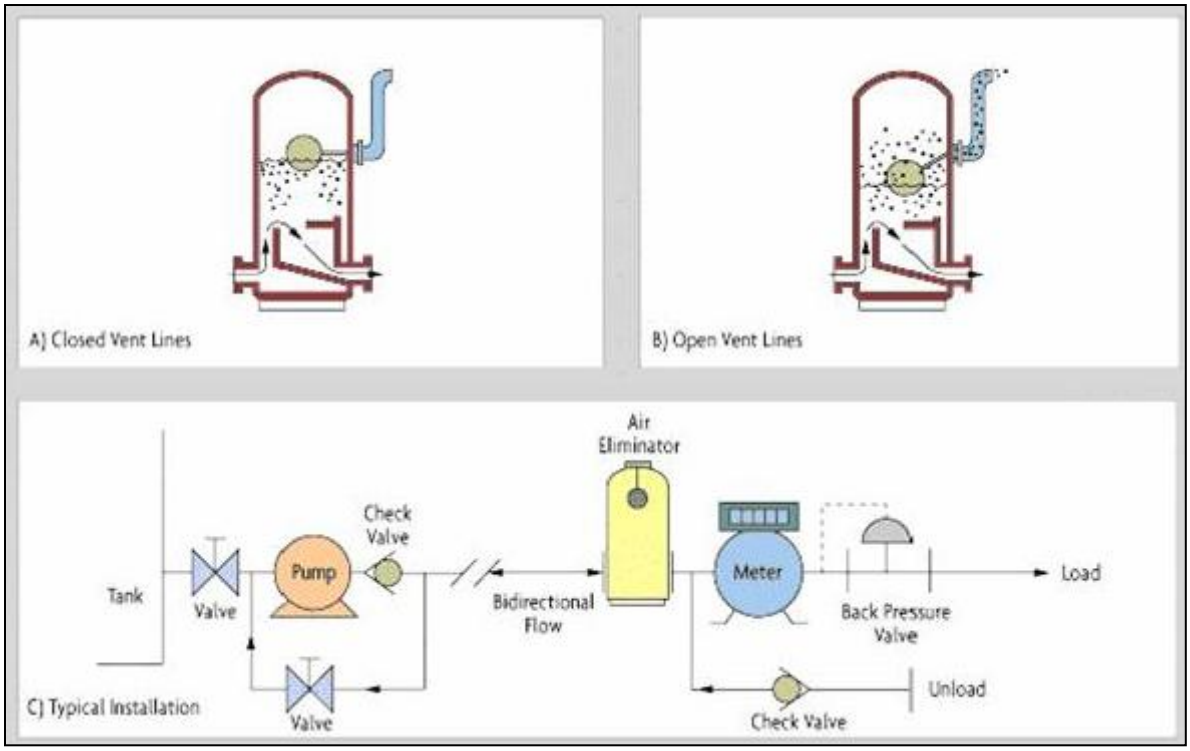

Figure 5-50. Air Eliminator Installation

Prior to zeroing the meter, all air should be removed. This can be accomplished by circulating the process fluid through the meter for several minutes at a velocity of approximately 2 to 6 fps. On batching or other intermittent flow applications, the meter should stay flooded so that it does not need to be purged again. All meters should be so installed so they can be zeroed while filled with liquid.

When zeroing the meter, any associated pumps or other equipment should be running so that their noise can be zeroed out. This can be achieved in most cases by locating a shut-off valve downstream of the meter and either operating the pump with its discharge blocked (this is acceptable with centrifugal pumps for a short period) or by opening the pump bypass on PD pumps. Valves used in zeroing the meter should provide tight shut-off; double-seated valves are preferred.

Meters that are expected to be calibrated in-line must be provided with block and bypass valves so that the reference standard (master) meter can be installed and disconnected without interrupting the process. The requirements for in-line calibration for ISO 9000 verification consist of comparing the output of the meter against a reference standard of higher accuracy, such as a dead-weight calibrated weigh tank. Before Coriolis meters, the reference standard was expected to be an order of magnitude more accurate than the meter being calibrated; however, this rarely happens due to the high accuracy of Coriolis meters.

In less critical installations (where weigh tanks are not used), volumetric provers or master meters (typically another Coriolis or a turbine meter calibrated at a flow laboratory) are used. When a volumetric reference is used in calibrating a mass flowmeter, the fluid density must be very precisely determined.

Control valves should be installed downstream of the meter to increase the back-pressure on the meter and lower the probability of cavitation or flashing.

When the process fluid must be held at higher temperatures, some Coriolis meters can be supplied with steam jackets. As an alternative, electrical heating tape can be added to the housing. Jackets or heating tapes must be installed by the manufacturer.

When flowmetering is not required, the Coriolis meter can be used solely as a densitometer. In that case, to minimize cost, usually a small (1/2”.) meter is installed in a by-pass line. Such a configuration is acceptable only in clean services that will not clog the small bore of the meter. In addition, a restriction must be placed in the main piping (between the by-pass taps) to ensure a flow through the meter.

5.13.10 Thermal mass flowmeters

Thermal mass flowmeters also measure the mass flow rate of gases and liquids directly. Volumetric measurements are affected by all ambient and process conditions that influence unit volume or indirectly affect pressure drop, while mass flow measurement is unaffected by changes in viscosity, density, temperature, or pressure.

Thermal mass flowmeters are often used in monitoring or controlling mass-related processes, such as chemical reactions that depend on the relative masses of unreacted ingredients. In detecting the mass flow of compressible vapors and gases, the measurement is unaffected by changes in pressure and/or temperature. One of the capabilities of thermal mass flowmeters is to accurately measure low gas flow rates or low gas velocities (under 25 feet per minute). This capability is much better than can be detected with any other device.

Thermal flowmeters provide high rangeability (10:1 to 100:1) if they are operated in a constant-temperature-difference mode. On the other hand, if heat input is constant, the ability to detect very small temperature differences is limited and so both precision and rangeability are reduced. At normal flows, measurement errors are usually in the 1 to 2% FS range.

This meter is available in high-pressure and high-temperature designs, and in special materials including glass, Monel®, and Teflon®. Flow-through designs are used to measure small flows of pure substances (heat capacity is constant if a gas is pure), while bypass and probe-type designs can detect large flows in ducts, flare stacks, and dryers.

5.13.11 Theory of operation

Thermal mass flowmeters are most often used for the regulation of low gas flows. They operate either by introducing a known amount of heat into the flowing stream and measuring an associated temperature change or by measuring the energy required to maintain probe at a constant temperature. The components of a basic thermal mass flowmeter include two temperature sensors and an electric heater between them (Figure 5-51). The heater can protrude into the fluid stream or can be external to the pipe.

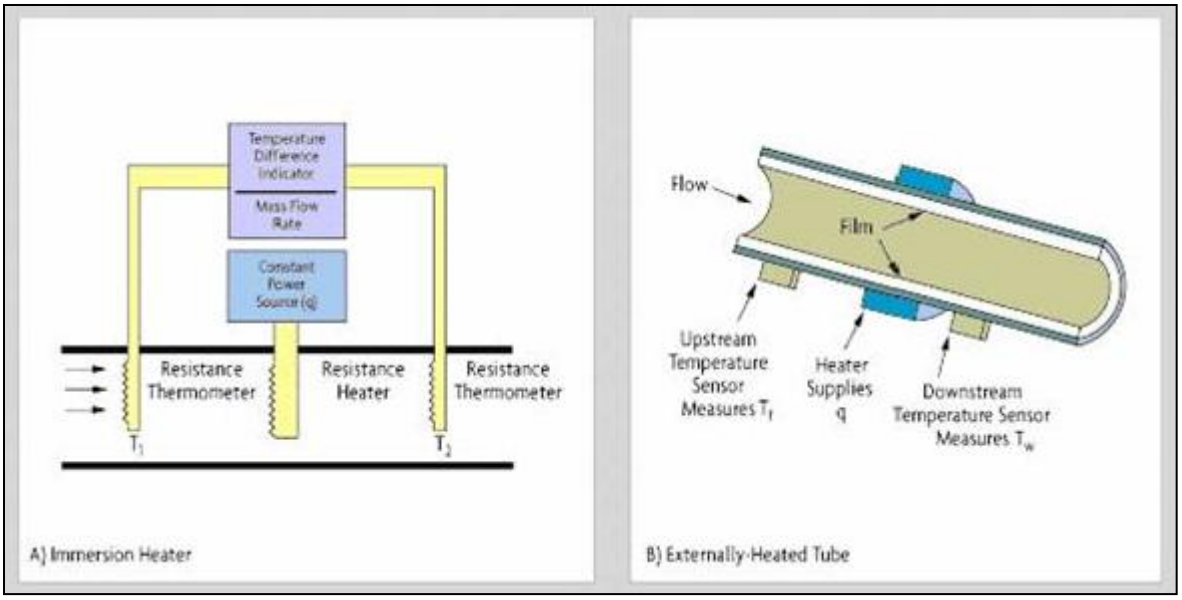

Figure 5-51. Thermal Mass Flowmeter Designs

In the direct-heat version, a fixed amount of heat (q) is added by an electric heater. As the process fluid flows through the pipe, RTDs measure the temperature rise while the amount of electric heat introduced is held constant.

The mass flow (m) is calculated based on the measured temperature difference (T_2-T_1), the meter coefficient (K), the electric heat rate (q), and the specific heat of the fluid (C_p), as follows:

$$m = \frac{K_q}{\left[C_p\left(T_2 - T_1\right)\right]}$$

Eqn. 5-24

5.13.12 Heated-tube design

Heated-tube flowmeters were developed to protect the heater and sensor elements from corrosion and any coating effects of the process. By mounting the sensors externally to the piping, the sensing elements respond more slowly and the relationship between mass flow and temperature difference becomes nonlinear. This nonlinearity will result because the heat introduced is distributed over some portion of the pipe's surface and transferred to the process fluid at different rates along the length of the pipe.

The pipe wall temperature is highest near the heater (detected as T_w) while, some distance away, there is no difference between wall and fluid temperature. At the distant location, therefore, the temperature of the unheated fluid (T_f) can be detected by measuring the wall temperature. This heat transfer process is non-linear, and the corresponding equation differs from the one above as follows:

$$M = \frac{K_q}{\left[C_p\left(T_w - T_f\right)\right]}$$

Eqn. 5-25

This flowmeter has two operating modes. The first mode measures the mass flow by keeping the electric power input constant and detecting the temperature rise. The second mode holds the temperature difference constant and measures the amount of electricity needed to maintain it. This second mode of operation provides much higher meter rangeability.

Heated-tube designs are generally used for the measurement of clean flows (e.g., bottled gases) and homogeneous flows (i.e., no mixtures) at moderate temperature ranges. These designs are not recommended for applications where either the fluid composition or its moisture content is variable, because the specific heat (C_p) would change. They are not affected by changes in pressure or temperature. Advantages include wide rangeability (the ability to measure very low flows) and ease of maintenance. When using this design the temperature difference (or heater power), flowmeter geometry, thermal capacity, specific heat, and viscosity of the process fluid must stay constant.

5.13.13 Bypass-type design

The bypass version of the thermal mass flowmeter was developed to measure larger flow rates (Figure 5-52). It consists of a thin-walled capillary tube (approximately 0.125" diameter) and two externally wound self-heating RTDs. Both RTDs heat the tube and measure the resulting temperature rise (A in Figure 5-52). The meter is placed in a bypass around a restriction in the main pipe and is sized to operate in the laminar flow region over its full operating range.

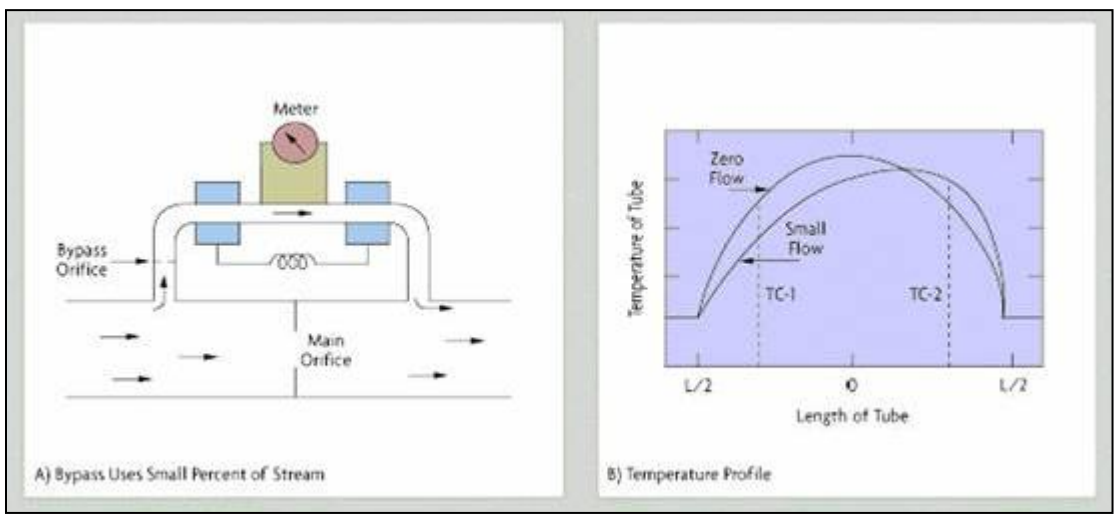

Figure 5-52. Bypass Flowmeter Design

When there is no flow, the heaters raise the bypass-tube temperature to approximately 160°F above ambient temperature. Under this condition, a symmetrical temperature distribution exists along the length of the tube. When flow is taking place, the gas molecules carry the heat downstream and the temperature profile is shifted in the direction of the flow. A Wheatstone bridge connected to the sensor terminals converts the electrical signal into a mass flow rate proportional to the change in temperature.

The small size of the bypass tube makes it possible to minimize electric power consumption and to increase the speed of response of the measurement. On the other hand, because of the small size, filters are necessary to prevent plugging. One serious limitation is the

high-pressure drop (up to 45 psi) needed to develop laminar flow. This pressure drop is typically acceptable only for high-pressure gas applications where the pressure needs to be reduced.

This is a low accuracy (2% FS), low maintenance, and low cost flowmeter. Electronic packages within the units allow for data acquisition, chart recording, and computer interfacing. These devices are popular in the semiconductor processing industry. Modern-day units are also available as complete control loops, including a controller and automatic control valve.

5.13.14 Air velocity probes

Probe-style mass flowmeters (Figure 5-53) are used to measure airflows and are insensitive to the presence of moderate amounts of dust. They maintain a temperature differential between two RTDs mounted on the sensor tube. The upper sensor measures the ambient temperature of the gas and continuously maintains the second RTD (near the tip of the probe) at 60°F above ambient. The higher the gas velocity, the more current is required to maintain the temperature differential.

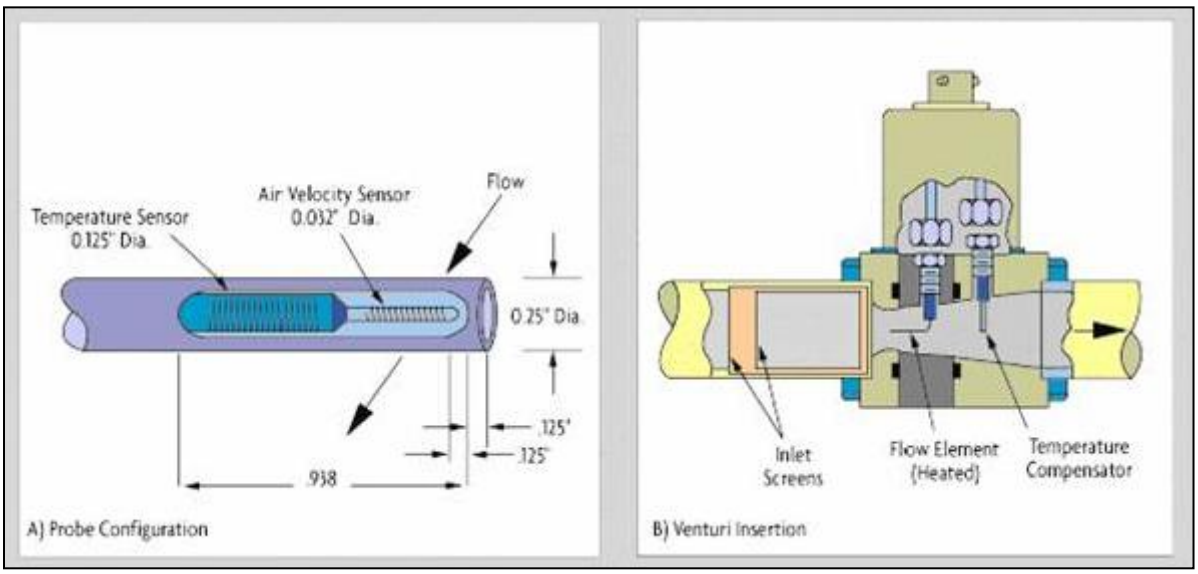

Figure 5-53. Thermal Velocity Stack

Another version of the velocity probe is the venturi-type thermal mass flowmeter, which places a heated mass flow sensor at the minimum diameter of a venturi flow element and a temperature compensation probe downstream (B in Figure 5-53). An inlet screen mixes the flow to make the temperature uniform. This design is used for both gas and liquid measurement (including slurries), with flow range a function of the size of the venturi. Pressure drop is relatively low and precision is dependent upon finding the proper probe insertion depth.

A flow switch version is also available that contains two temperature sensors in the tip. One of the sensors is heated and the temperature difference is a measure of velocity. The switch can be used to detect high or low flow within 5%.

5.13.15 Uses and limitations

Thermal mass flowmeters can have very high rangeability and reasonable accuracy, but they also have serious limitations. Potential problems include the condensation of moisture (in saturated gases) on the temperature detector. Such condensation will cause the thermometer to give low readings and can cause corrosion. Coating and material build-up on the sensor will also

inhibit heat transfer and cause the meter to read low. Additional potential sources of error include variations in the specific heat caused by changes in the composition of the gas.

Some common gas-flow applications for thermal mass flowmeters include combustion air measurement in large boilers, semiconductor process gas measurement, air sampling in nuclear power plants, process gas measurements in the chemical and petrochemical industries, research and development applications, gas chromatography, and filter and leak testing. While hot-wire anemometers are best suited for clean gases at low velocities, venturi meters can also be considered for some liquid (including slurry) flow applications. Thermal mass flowmeters are well suited for high rangeability measurements of very low flows, but also can be used in measuring large flows, such as combustion air, natural gas, or the distribution of compressed air.

CHAPTER 6

Pulse Code Modulation Formats

6.1 Introduction

Determining the structure of a PCM stream depends on the measurements being made. The piece of information needed to begin building a PCM format is the frequency response of the individual parameters to be measured, so that the minimum sample rate can be determined.

The goal in creating a PCM format is to maximize the efficiency of the PCM stream by maintaining the minimum sampling rate for each parameter while keeping the bit rate as low as possible. The following definitions describe characteristics of the format to make this possible. These definitions and others are covered in more detail in Chapter 4 of IRIG Standard 106.

6.2 Definitions

Minor frame synchronization (sync). This is a fixed digital word with a length of 16 to 33 bits. The bit pattern follows the Barker codes, which are listed in Table C-1 of Appendix C in IRIG Standard 106.

The minor frame sync pattern identifies the beginning of a new minor frame (Figure 6-1). Without it, there would be no way of knowing where a minor frame ended and another one begins.

1 1 1 1 1 0 1 0 1 1 1 1 0 0 1 1 0 0 1 0 0 0 0 0	1 0 1 0 0 0 1 0 1 1 0 1	0 1 1 1 0 1 1 0 0 … …
Minor Frame Synchronization	Data Word	Data Word

Figure 6-1. Minor Frame Synchronization Pattern

There can be some arguments made on the number of words the minor frame sync pattern occupies. From the view of the instrumentation engineer, a 24-bit minor frame sync pattern is made up of two words if you have a common 12-bit word length in your PCM stream; however, those at the ground station will say it is one word in accordance with (IAW) IRIG Standard 106, Chapter 4. This can cause confusion when defining the number of words per minor frame.

Minor frame. A minor frame is defined as the start of the minor frame sync pattern to the beginning of the next minor frame sync pattern. Figure 6-2 shows one minor frame.

Minor Frame Sync	DATA	DATA	DATA	DATA	DATA	DATA

Figure 6-2. One Minor Frame

Major frame. A major frame contains the number of minor frames required to include one sample of every parameter in the format. Figure 6-3 below shows a major frame containing four minor frames.

Minor Frame Sync	DATA	DATA	DATA	DATA	DATA	DATA
Minor Frame Sync	DATA	DATA	DATA	DATA	DATA	DATA
Minor Frame Sync	DATA	DATA	DATA	DATA	DATA	DATA
Minor Frame Sync	DATA	DATA	DATA	DATA	DATA	DATA

Figure 6-3. Major Frame

Minor frame length. The minor frame length is defined as the number of words (including the frame sync pattern) within each minor frame.

Defining the minor frame sync pattern as one or two words can cause confusion in the length of a minor frame. Instrumentation engineers tend to count the minor frame sync pattern as two words, so for the example above (Figure 6-3), the minor frame length would equal 8. The ground station would say there are seven words in the minor frame according to IRIG Standard 106, Chapter 4. This should be kept in mind when defining the minor frame length.

Subframe identification. The subframe identification (SFID) is used to identify the individual minor frames within a major frame (Figure 6-4).

		SFID					
1	Minor Frame Sync	0	DATA	DATA	DATA	DATA	DATA
2	Minor Frame Sync	1	DATA	DATA	DATA	DATA	DATA
3	Minor Frame Sync	2	DATA	DATA	DATA	DATA	DATA
4	Minor Frame Sync	3	DATA	DATA	DATA	DATA	DATA

Figure 6-4. Subframe Identification

Usually the SFID is the first word following the minor frame sync word. The PCM systems can sequentially count from 0 or 1, but the first minor frame in a major frame is named the first minor frame. In the example shown above, minor frame 1 has a SFID of 0.

Word Position. The first word after the minor frame sync pattern shall be numbered 1. Each subsequent word is numbered sequentially within the minor frame (Figure 6-5).

		1	2	3	4	5	6
1	Minor Frame Sync	0	DATA	DATA	DATA	DATA	DATA
2	Minor Frame Sync	1	DATA	DATA	DATA	DATA	DATA
3	Minor Frame Sync	2	DATA	DATA	DATA	DATA	DATA
4	Minor Frame Sync	3	DATA	DATA	DATA	DATA	DATA

Figure 6-5. Word Position

There can be some confusion on the word position of the minor frame sync pattern. Instrumentation engineers will give it two word numbers for each of the common word lengths needed to make up the minor frame sync pattern. The numbering may be the last two word numbers in the PCM stream, such that the first word that follows is word 1. For example, if you have 8 words (counting the minor frame sync pattern as two words) per minor frame, the minor frame sync pattern may be defined to be minor frame word numbers 7 and 8. The ground station may give it a word number of zero (or none) and say there were seven words per minor frame.

Major frame length. The major frame length is defined as the minor frame length multiplied by the number of minor frames per major frame.

Again, the instrumentation engineer will count the minor frame sync as two words in making this calculation. In this example, there would be 4 x 8 or 32 words/major frame. The ground station would say there are 4 x 7 (i.e., 28) words/major frame.

Supercommutation. A supercommutated word (Figure 6-6) is present more than once within the minor frame (usually in even intervals) and is sampled at a multiple of the minor frame rate. The data word indicated as "A" is a supercommutated word. More specifically, it is said that "A" is supercommutated on a minor frame.

		1	2	3	4	5	6
1	Minor Frame Sync	0	A	DATA	DATA	DATA	A
2	Minor Frame Sync	1	A	DATA	DATA	DATA	A
3	Minor Frame Sync	2	A	DATA	DATA	DATA	A
4	Minor Frame Sync	3	A	DATA	DATA	DATA	A

Figure 6-6. Supercommutated Word

Subframe. A subframe is the column of data words in the same minor frame word position of each minor frame. In Figure 6-7, subframe 3 has a depth of four minor frames.

		1	2	3	4	5	6
1	Minor Frame Sync	0	A	B	DATA	DATA	A
2	Minor Frame Sync	1	A	C	DATA	DATA	A
3	Minor Frame Sync	2	A	B	DATA	DATA	A
4	Minor Frame Sync	3	A	E	DATA	DATA	A

Figure 6-7. Subcommutated Words

Subcommutation. Subcommutation is the sampling of a word at sub-multiple rates of the minor frame rate. In Figure 6-7 B, C, and D are subcommutated words located in subframe 3.

Chapter 4 of IRIG Standard 106 uses the term supercommutation on a subframe in describing data word B, which appears twice in a subframe.

Bit Rate. The bit rate is the number of bps produced from the PCM stream.

6.3 Class I and Class II Pulse Code Modulation

There are two classes of PCM formats. A majority of the instrumentation systems uses Class I PCM formats. For differences between the two classes, refer to IRIG Standard 106, Chapter 4, Section 4.2.1.

6.4 Calculating the Parameter Sample Rate

When a PCM frame is built, the goal is to make sure that the words are being sampled at their minimum rate. This depends on the frequency response of the measurement.

Because the instrumentation engineer generates the PCM format, the calculations from this point on will be done from the instrumentation engineer's point of view. The assumption will be made that the minor frame sync pattern is two words and the minor frame sync word position is the last two words of the minor frame. This assumption makes the calculations easier.

Calculating the major frame length:

$$\boxed{\text{Major Frame Length} = \text{Minor Frame Length} \times \frac{\text{\# Minor Frames}}{\text{Major Frames}}}$$

$$\text{Major Frame Length} = \frac{\text{words}}{\text{minor frame}} \times \frac{\text{minor frames}}{\text{major frame}}$$

$$\text{Major Frame Length} = \frac{\text{words}}{\text{major frame}}$$

Calculating the major frame rate:

$$\boxed{\text{Major Frame Rate} = \frac{\text{Bit Rate}}{\text{Word Length} \times \text{Major Frame Length}}}$$

$$\text{Major Frame Rate} = \frac{\frac{\text{bits}}{\text{sec}}}{\frac{\text{bits}}{\text{word}} \times \frac{\text{words}}{\text{major frame}}}$$

$$\text{Major Frame Rate} = \frac{\text{bits}}{\text{sec}} \times \frac{\text{word}}{\text{bits}} \times \frac{\text{major frame}}{\text{words}}$$

$$\text{Major Frame Rate} = \frac{\text{major frames}}{\text{sec}}$$

Calculating the parameter sample rate:

$$\boxed{\text{Parameter Sample Rate} = \text{Samples per Major Frame X Major Frame Rate}}$$

$$\text{Parameter Sample Rate} = \frac{\text{samples}}{\text{major frame}} \text{ X } \frac{\text{major frames}}{\text{sec}}$$

$$\text{Parameter Sample Rate} = \frac{\text{samples}}{\text{sec}}$$

The parameter sample rate is determined by the number of time it appears within a major frame and the bit rate. By using the above calculations, the sample rate of the words presented earlier (A through D) can be determined.

In our example, if the PCM frame bit rate equals 250 kbps and 12 bits/word, then:

a. major frame length = (8 words/minor frame)(4 minor frame/major frame) = 32 words/major frame;

b. major frame rate = (250 kbps)/[(12 bits/word)(32 words/major frame)] = 651.04 major frames/second;

c. sample rate of data word A = 8 x 651.04 = 5208.33 samples/second;

d. sample rate of data word B = 2 x 651.04 = 1302.08 samples/second;

e. sample rate of data word C and D = 1 x 651.04 = 651.04 samples/second.

6.5 Building a Pulse Code Modulation Format (An Example)

Suppose a project needs to measure the parameters listed below. The minimum sample rates in samples per second (sps) are determined in order to obtain the desired frequency response required by the test engineer.

a. 15 temperatures (100 sps)

b. 10 strain gages (140 sps)

c. 3 accelerometers (4800 sps)

d. 3 pressures (700 sps)

e. 1 continuously variable slope delta (CVSD) digital audio word (1600 sps)

The total sps required for all the parameters within the major frame will be the sum of all the sample rates of each type of measurement (calculated in Table 6-1).

Table 6-1. Measurement Sample Rates

Measurement	# of Parameters	Samples per second	Calculation	sps per Parameter
Temperatures	15	100	15 x 100	1500
Strain Gages	10	140	10 x 140	1400
Accelerometers	3	4800	3 x 4800	14,400
Pressures	3	700	3 x 700	2100

CVSD Digital Audio Word	1	1600	1 x 1600	1600
	Total samples/second in the major frame			21,000

Adding all the sample rates yields an aggregate sample rate, which is required to adequately sample all of the parameters. Taking the lowest sample rate, 100 sps, and dividing it into the aggregate rate, you get the minimum number of data words needed in your major frame. The calculation for words per major frame is as follows:

(21,000 sps/major frame)/(100 sps/word) = 210 words/major frame

When choosing the number of words/minor frame and the number of minor frames/major frame, it is advantageous to choose a number that has many integer factors. In other words, prime numbers like 5 are a poor choice, but numbers like 24, have many integer factors (1, 2, 3, 4, 6, 8, 12, and 24). This will aid in getting a greater selection of sample rates.

If we decide to have 12 minor frames in the major frame, then the number of words in each minor frame will be calculated as:

(210 words/major frame)/(12 minor frames/major frame) = 17.5 (i.e., ~ 18 words/minor frame)

Note: there are two words for the minor frame synchronization pattern and one more for the SFID counter, bringing the total to 21.

Another three spare words need to be added to make the number of words per minor frame evenly divisible by several numbers so we can supercommutate evenly. This gives a total of 24 words/minor frame.

Now that the frame structure is complete, it is time to start placing the words into the PCM map (see Table 6-2). Remember the assumption that each word in the major frame is initially sampled at 100 sps. If necessary, increasing the bit rate can increase the base sample rate.

Table 6-2. Developing the PCM Format

(23) (24)	1	2	3	4	5	6	7	8	9	10	11	12	13	14	15	16	17	18	19	20	21	22
MNFRSYNC	1																					
MNFRSYNC	2																					
MNFRSYNC	3																					
MNFRSYNC	4																					
MNFRSYNC	5																					
MNFRSYNC	6																					
MNFRSYNC	7																					
MNFRSYNC	8																					
MNFRSYNC	9																					
MNFRSYNC	10																					
MNFRSYNC	11																					
MNFRSYNC	12																					

To account for all the words in the frame, the minor frame sync pattern is considered to be two words and numbered as words 23 and 24. Word numbers 23 and 24 are shown in parenthesis because they comprise the first word in the minor frame.

Begin with the parameters with the highest sample rate. In this case, the three accelerometers each need a sample rate of 4800 sps. Since each word in the major frame is 100 sps, it would take 4800/100 = 48 accelerometer words in the major frame to meet the minimum sampling requirement. This means we must evenly space 48 words within the major frame. Since we have 12 minor frames/major frame, we can supercommutate this word four times in the minor frames (Table 6-3).

Table 6-3. Developing the PCM Format (Cont'd)

(23)	(24)	1	2	3	4	5	6	7	8	9	10	11	12	13	14	15	16	17	18	19	20	21	22
MNFRSYNC	1	A1	A2	A3				A1	A2	A3				A1	A2	A3				A1	A2	A3
MNFRSYNC	2	A1	A2	A3				A1	A2	A3				A1	A2	A3				A1	A2	A3
MNFRSYNC	3	A1	A2	A3				A1	A2	A3				A1	A2	A3				A1	A2	A3
MNFRSYNC	4	A1	A2	A3				A1	A2	A3				A1	A2	A3				A1	A2	A3
MNFRSYNC	5	A1	A2	A3				A1	A2	A3				A1	A2	A3				A1	A2	A3
MNFRSYNC	6	A1	A2	A3				A1	A2	A3				A1	A2	A3				A1	A2	A3
MNFRSYNC	7	A1	A2	A3				A1	A2	A3				A1	A2	A3				A1	A2	A3
MNFRSYNC	8	A1	A2	A3				A1	A2	A3				A1	A2	A3				A1	A2	A3
MNFRSYNC	9	A1	A2	A3				A1	A2	A3				A1	A2	A3				A1	A2	A3
MNFRSYNC	10	A1	A2	A3				A1	A2	A3				A1	A2	A3				A1	A2	A3
MNFRSYNC	11	A1	A2	A3				A1	A2	A3				A1	A2	A3				A1	A2	A3
MNFRSYNC	12	A1	A2	A3				A1	A2	A3				A1	A2	A3				A1	A2	A3

The parameter with the next highest sample rate is the CVSD digital audio word at 1600 sps. We would need 1600/100 = 16 words in the major frame, or 16/12 = 1.333 (i.e., two minor frame words). Therefore, the CVSD digital audio would have to be supercommutated twice in each minor frame (Table 6-4).

Table 6-4. Developing the PCM Format (Cont'd)

(23)	(24)	1	2	3	4	5	6	7	8	9	10	11	12	13	14	15	16	17	18	19	20	21	22
MNFRSYNC	1	A1	A2	A3			V	A1	A2	A3				A1	A2	A3			V	A1	A2	A3
MNFRSYNC	2	A1	A2	A3			V	A1	A2	A3				A1	A2	A3			V	A1	A2	A3
MNFRSYNC	3	A1	A2	A3			V	A1	A2	A3				A1	A2	A3			V	A1	A2	A3
MNFRSYNC	4	A1	A2	A3			V	A1	A2	A3				A1	A2	A3			V	A1	A2	A3
MNFRSYNC	5	A1	A2	A3			V	A1	A2	A3				A1	A2	A3			V	A1	A2	A3
MNFRSYNC	6	A1	A2	A3			V	A1	A2	A3				A1	A2	A3			V	A1	A2	A3
MNFRSYNC	7	A1	A2	A3			V	A1	A2	A3				A1	A2	A3			V	A1	A2	A3
MNFRSYNC	8	A1	A2	A3			V	A1	A2	A3				A1	A2	A3			V	A1	A2	A3
MNFRSYNC	9	A1	A2	A3			V	A1	A2	A3				A1	A2	A3			V	A1	A2	A3
MNFRSYNC	10	A1	A2	A3			V	A1	A2	A3				A1	A2	A3			V	A1	A2	A3
MNFRSYNC	11	A1	A2	A3			V	A1	A2	A3				A1	A2	A3			V	A1	A2	A3
MNFRSYNC	12	A1	A2	A3			V	A1	A2	A3				A1	A2	A3			V	A1	A2	A3

The parameters with the next highest sample rate are the pressures at 700 sps. We would need 700/100 = 7 words in the major frame. Since we can't evenly space 7 words within the 12 word deep subframe, we will have to place it 12 times in a subframe, which will simply over sample it at 1200 sps (Table 6-5).

Table 6-5. Developing the PCM Format (Cont'd)

(23)	(24)	1	2	3	4	5	6	7	8	9	10	11	12	13	14	15	16	17	18	19	20	21	22
MNFRSYNC	1	A1	A2	A3			V	A1	A2	A3	P1	P2	P3	A1	A2	A3			V	A1	A2	A3
MNFRSYNC	2	A1	A2	A3			V	A1	A2	A3	P1	P2	P3	A1	A2	A3			V	A1	A2	A3
MNFRSYNC	3	A1	A2	A3			V	A1	A2	A3	P1	P2	P3	A1	A2	A3			V	A1	A2	A3
MNFRSYNC	4	A1	A2	A3			V	A1	A2	A3	P1	P2	P3	A1	A2	A3			V	A1	A2	A3
MNFRSYNC	5	A1	A2	A3			V	A1	A2	A3	P1	P2	P3	A1	A2	A3			V	A1	A2	A3
MNFRSYNC	6	A1	A2	A3			V	A1	A2	A3	P1	P2	P3	A1	A2	A3			V	A1	A2	A3
MNFRSYNC	7	A1	A2	A3			V	A1	A2	A3	P1	P2	P3	A1	A2	A3			V	A1	A2	A3
MNFRSYNC	8	A1	A2	A3			V	A1	A2	A3	P1	P2	P3	A1	A2	A3			V	A1	A2	A3
MNFRSYNC	9	A1	A2	A3			V	A1	A2	A3	P1	P2	P3	A1	A2	A3			V	A1	A2	A3
MNFRSYNC	10	A1	A2	A3			V	A1	A2	A3	P1	P2	P3	A1	A2	A3			V	A1	A2	A3
MNFRSYNC	11	A1	A2	A3			V	A1	A2	A3	P1	P2	P3	A1	A2	A3			V	A1	A2	A3
MNFRSYNC	12	A1	A2	A3			V	A1	A2	A3	P1	P2	P3	A1	A2	A3			V	A1	A2	A3

The next highest sample rate are the strains at 140 sps. We would need 140/100 = 1.4 or 2 words in the major frame. We can evenly supercommutate on the subframe (or super subcommutate) 2 words within a 12-word-deep subframe, so each strain measurement will be spaced 6 minor frames apart and have a sample rate of 2 x 100 sps = 200 sps (Table 6-6).

Table 6-6. Developing the PCM Format (Cont'd)

(23)	(24)	1	2	3	4	5	6	7	8	9	10	11	12	13	14	15	16	17	18	19	20	21	22
MNFRSYNC	1	A1	A2	A3	S1	S7	V	A1	A2	A3	P1	P2	P3	A1	A2	A3			V	A1	A2	A3
MNFRSYNC	2	A1	A2	A3	S2	S8	V	A1	A2	A3	P1	P2	P3	A1	A2	A3			V	A1	A2	A3
MNFRSYNC	3	A1	A2	A3	S3	S9	V	A1	A2	A3	P1	P2	P3	A1	A2	A3			V	A1	A2	A3
MNFRSYNC	4	A1	A2	A3	S4	S10	V	A1	A2	A3	P1	P2	P3	A1	A2	A3			V	A1	A2	A3
MNFRSYNC	5	A1	A2	A3	S5		V	A1	A2	A3	P1	P2	P3	A1	A2	A3			V	A1	A2	A3
MNFRSYNC	6	A1	A2	A3	S6		V	A1	A2	A3	P1	P2	P3	A1	A2	A3			V	A1	A2	A3
MNFRSYNC	7	A1	A2	A3	S1	S7	V	A1	A2	A3	P1	P2	P3	A1	A2	A3			V	A1	A2	A3
MNFRSYNC	8	A1	A2	A3	S2	S8	V	A1	A2	A3	P1	P2	P3	A1	A2	A3			V	A1	A2	A3
MNFRSYNC	9	A1	A2	A3	S3	S9	V	A1	A2	A3	P1	P2	P3	A1	A2	A3			V	A1	A2	A3
MNFRSYNC	10	A1	A2	A3	S4	S10	V	A1	A2	A3	P1	P2	P3	A1	A2	A3			V	A1	A2	A3
MNFRSYNC	11	A1	A2	A3	S5		V	A1	A2	A3	P1	P2	P3	A1	A2	A3			V	A1	A2	A3
MNFRSYNC	12	A1	A2	A3	S6		V	A1	A2	A3	P1	P2	P3	A1	A2	A3			V	A1	A2	A3

The remaining parameters are the temperatures with a required sample rate of 100 sps. We would only need one each of the temperature words in the major frame, which can be placed once in a subframe (Table 6-7).

Table 6-7. Developing the PCM Format (Cont'd)

(23)	(24)	1	2	3	4	5	6	7	8	9	10	11	12	13	14	15	16	17	18	19	20	21	22
MNFRSYNC	1	A1	A2	A3	S1	S7	V	A1	A2	A3	P1	P2	P3	A1	A2	A3	T1	T11	V	A1	A2	A3
MNFRSYNC	2	A1	A2	A3	S2	S8	V	A1	A2	A3	P1	P2	P3	A1	A2	A3	T2	T12	V	A1	A2	A3
MNFRSYNC	3	A1	A2	A3	S3	S9	V	A1	A2	A3	P1	P2	P3	A1	A2	A3	T3	T13	V	A1	A2	A3
MNFRSYNC	4	A1	A2	A3	S4	S10	V	A1	A2	A3	P1	P2	P3	A1	A2	A3	T4	T14	V	A1	A2	A3
MNFRSYNC	5	A1	A2	A3	S5		V	A1	A2	A3	P1	P2	P3	A1	A2	A3	T5	T15	V	A1	A2	A3
MNFRSYNC	6	A1	A2	A3	S6		V	A1	A2	A3	P1	P2	P3	A1	A2	A3			V	A1	A2	A3
MNFRSYNC	7	A1	A2	A3	S1	S7	V	A1	A2	A3	P1	P2	P3	A1	A2	A3	T6		V	A1	A2	A3
MNFRSYNC	8	A1	A2	A3	S2	S8	V	A1	A2	A3	P1	P2	P3	A1	A2	A3	T7		V	A1	A2	A3
MNFRSYNC	9	A1	A2	A3	S3	S9	V	A1	A2	A3	P1	P2	P3	A1	A2	A3	T8		V	A1	A2	A3
MNFRSYNC	10	A1	A2	A3	S4	S10	V	A1	A2	A3	P1	P2	P3	A1	A2	A3	T9		V	A1	A2	A3
MNFRSYNC	11	A1	A2	A3	S5		V	A1	A2	A3	P1	P2	P3	A1	A2	A3	T10		V	A1	A2	A3
MNFRSYNC	12	A1	A2	A3	S6		V	A1	A2	A3	P1	P2	P3	A1	A2	A3			V	A1	A2	A3

Now that the structure of the PCM format is complete, the bit rate needs to be calculated. The same equations as shown earlier will be used, will be worked backwards, using algebra to get the bit rate.

$$\text{Major Frame Length} = \text{Minor Frame Length} \times \frac{\text{\# Minor Frames}}{\text{Major Frames}}$$

Major Frame Length = (24 words/minor frame)(12 minor frame/major frame)
Major Frame Length = 288 words/major frame

The bit rate will be calculated using the following equation:

$$\text{Major Frame Rate} = \frac{\text{Bit Rate}}{\text{Word Length} \times \text{Major Frame Length}}$$

Bit Rate = (Major Frame Rate)(Word Length)(Major Frame Length)
Bit Rate = (100 major frames/second)(16 bits/word)(288 words/major frame)
Bit Rate = (100)(16)(288) bps
Bit Rate = 460,800 bps

Depending on the encoding system, there may be limitations on the number of bit rates available on the encoder. For this example, the next even-numbered bit rate greater than 460,800 is 500 kbps.

Since the bit rate has been selected to be 500 kbps, the sample rates of the parameters will need to be changed. The actual sample rates for all the parameters are calculated as:

Major Frame Rate = (500 kbps) / [(16 bits/word)(288 words/major frame)]
Major Frame Rate = (500 kbps) / (4608 major frames/second)
Major Frame Rate = 108.5 major frames/second

Now, take each parameter and multiply the major frame rate by how many times it appears in the major frame.

Measurement	Major Frame Rate x No. of Occurrences in Frame	Actual Rate	Desired Rate
Temperatures	1 x 108.5 sps	108.5 sps	100 sps
Strain Gages	2 x 108.5 sps	217 sps	140 sps
Accelerometers	48 x 108.5 sps	5208 sps	4800 sps
Pressures	12 x 108.5 sps	1302 sps	700 sps
CVSD Digital Audio Word	24 x 108.5 sps	2604 sps	1600 sps

Other PCM formats, which are identified in the guidelines of IRIG Standard 106, Chapter 4, can also meet these requirements. The bottom line is that all of the desired sample rate requirements have been met. By following these steps, the resulting PCM format efficiently utilizes the lowest choice of available bit rates while providing the minimum sampling rates required.

This page intentionally left blank.

CHAPTER 7

Calibration

7.1 Definition and Need for Calibration

According to Webster's Dictionary, calibrate means "to check, adjust, or standardize systematically the graduations of a quantitative measuring instrument." As noted in RCC 118-12 Volume 1:

> A telemetry system measurement begins with the sensing of a measurand by a transducer located either on a test vehicle or at a remote test site. It ends at a data storage or display device located at a receiving test site. Radio links, direct wiring, electro-optical methods, or other combinations can interconnect telemetry systems. To ensure that data is of the highest possible quality, engineers test and calibrate individual components in a suitable laboratory before installing the system. Subsequently, the engineer subjects the telemetry system to a carefully conducted end-to-end calibration check just before, during, and immediately after the actual test.

This chapter provides guidance to the instrumentation engineer on how to address general calibration methodologies, techniques, and cases.

The instrumentation engineer uses many types of transducers to make many physical measurements. Examples of these measurements include acceleration, velocity, displacement pressure, acoustics, flow, strain, humidity, corrosion, images, video, temperature, heat flux, position, torque, shaft power, angular rate, time, frequency, and phase angle. Each measurement may require a different calibration technique. For example, shakers and sound generators can provide known mechanical inputs to accelerometers and microphones and a voltmeter might measure the output voltage. Inexpensive transducers may require expensive calibration techniques and procedures to ensure data validity. This handbook discusses calibration for static and dynamic measurements. Detailed calibration techniques for different transducer types (e.g. strain gages, flow sensors, microphones, RTDs, and thermocouples) are in the signal conditioning section of this handbook.

7.2 Calibration Types

This handbook defines three calibration types. They are:

a. transducer calibration that focuses on the transducer input output relationship;

b. data system calibration that simulates or models the input of the entire measurement system;

c. physical end-to-end calibration.

Physical (also called mechanical) end-to-end calibration focuses on the relationship between the physical input and measured output throughout the entire measurement system.

The purpose of a measurement system is to accurately measure the state of the unit under test. The transducer converts one form of energy, such as force displacement and acceleration, to

another form, such as an electrical signal. The signal conditioner prepares the electrical signal for input to a data collection device. The transducer usually comes with a transfer characteristic (e.g. 100 mV/g), but the instrumentation engineer needs to know the final calibration through all components of the signal conditioning system.

The engineer sets up the signal conditioner to receive a known input type and range and convert the signal to a standard data collection unit. Using information from the manufacturer of the transducer and signal conditioner, the engineer can calculate an output; however, whenever possible, the instrumentation engineer should perform an end-to-end calibration. Calibration involves applying known values to the unit under test under specified conditions and recording the results to improve the overall accuracy of the measurement system do this. Required data accuracy determines the need to calibrate. The cost of data acquisition is directly proportional to the data accuracy.

7.2.1 Transducer calibration

Usually, the transducer manufacturer performs a unit calibration in their laboratory. The instrumentation engineer should be familiar with the techniques used by the manufacturer to calibrate individual transducers. Experience recommends that the engineer perform an in-house calibration on the individual transducer to verify the accuracy of the manufacturer's transfer function. If there are deviations from the manufacturer's transfer function, the engineer may define a new transfer function for that unit, or in some cases, reset the device to conform to the original transfer function. Successive calibrations may indicate upcoming failures. Many engineers stop after performing a transducer calibration. They then combine the transducer's transfer function mathematically with the data system signal conditioner's transfer functions. This provides a calibration estimate under the assumption that the engineer precisely knows all the transfer characteristics of the wiring and other signal conditioning between the transducer and the data storage system. The engineer assumes that all wiring and signal conditioning will function as designed, but one bad connection invalidates the data. Relying solely on transducer calibration is too risky for collection of valid data on an experiment or test.

7.2.2 Data system calibration

For making valid engineering measurements, the most important consideration is how the transducer operates in the actual test environment with all signal conditioning attached. Although not always feasible, the transducer should be calibrated while connected to the same signal conditioning equipment in the laboratory as will be used on the actual test article. After mounting the transducer on the test article, perform a minimum of a data system calibration. This can be accomplished by simulating an excitation of the transducer such as is often accomplished for strain gages by using a shunt calibration resistor to simulate a change in resistance of the strain gage. In addition, inserting a simulated transducer signal into the system verifies all signal conditioning transfer function predictions. This calibration simulates transducer excitation by its physical input. Installation constraints (e.g. the transducer is inaccessible or glued onto a structure such as a strain gage) often mean that a data system calibration is the best that an instrumentation engineer can do to ensure acquisition of valid data. Data system calibration simulates the desired measurand rather than physically stimulating the transducer's sensing device.

7.2.3 Physical end-to-end calibration

Physical end-to-end calibration is the best method of ensuring collection of valid data. As stated in the Institute of Environmental Sciences (IES) recommended practice (RP), "[a]n

end-to-end mechanical calibration means a full calibration of the instrumentation from the actual physical input to the transducer to the output where the analog or digital signal will normally be analyzed."[14] An end-to-end calibration verifies the measurement system characteristics. Engineers perform these calibrations after installing the measurement system in the test article. A calibration source stimulates the transducer. The instrumentation engineer monitors the signal entering the data collection unit to ensure the calculated value matches the actual system transfer function. It is highly recommended that an end-to-end calibration be performed before the experiment and after the experiment is completed but before the instrumentation system is removed. The end-to-end calibration checks the measurement system (including wiring, connectors, routing, etc) installed on the test article, so that the engineer can identify and correct many potential problems early (including phasing and wiring errors).

7.2.4 Calibration concerns

In performing calibrations, concerns include FS, range, output signal, linearity, resolution, cross axis sensitivity, thermal zero shifts, thermal sensitivity shifts, voltage offsets, hysteresis, repeatability, over range, bias errors, recording, record keeping, test recordings, calibration curves, and calibration reports. An instrumentation engineer should understand if the transducer manufacturer is presenting specifications as % of FS or %AR. Chapter 1 of RCC 118-12, Volume 1 defines and addresses many of these concerns.

7.3 Sample Transducer Calibration Procedure Format

The sample calibration procedure format in Table 7-1 can help to obtain accurate, quality calibrations on each test. Each procedure contains two parts. The first part describes the setup and provides instructions on how to perform the calibration. The second part consists of a block diagram of the setup to perform the calibration. Many references discuss acceptable transducer calibration procedures. Vendor literature often discusses different calibration techniques. Those who write calibration procedure should work closely with national and international standards organizations, laboratories, vendors, and manufacturers; the US NIST is an excellent source. The sample procedure format in Table 7-1 may be modified to meet the measurement needs. The calibration output should normally be a plot or equation describing the relation between engineering units and measured output, such as voltage.

Table 7-1. Calibration Procedure Format

Manufacturer	
Model	
Serial Number	
Measurand Type	(acceleration, strain, pressure, acoustic, position, etc.)
Transducing Technique	(strain gage, capacitive, piezoelectric, piezoresistive, etc.)
Electrical Power Required	(+15 VDC, 2 mA constant current, none, etc.)
Calibration Type	(transducer, data system, or end-to-end)
Transducer Full Scale Input Range	(± 5 g, ± 100 microstrain, etc.)
Transducer Full Scale Output Range	(± 5 V, etc.)

[14] Himelblau et al., *Handbook for Dynamic Data Acquisition and Analysis*. IES Recommended Practice 012.1. 1994. Available at http://hdl.handle.net/2014/33780.

Transducer Calibration Range	(± 2 g, etc.)
Frequency Response	(resonance damping, etc.)
Signal Conditioner	(specify signal conditioning used)
Input Exciter	(shaker, loudspeaker, calibrator type)
Input Amplitude	
Input Frequency	
Static or Dynamic	
Output Recording Method	(paper, voltmeter, computer, etc.)
Name of Calibrator	
Date of Calibration	
Calibration Output	
Calibration Instructions	A paragraph or two of narrative describing how to accomplish the evaluation. A block diagram showing the equipment setup is also helpful.

7.4 Static and Dynamic Calibration

Static and dynamic are two classifications of calibrations. For this handbook, a static calibration is a calibration where the physical input does not vary significantly as a function of time; in other words, the frequency of the physical input is 0 Hz. An example of a static calibration is measurement of the output of an accelerometer excited by a constant instantaneous value, such as +1 g. For dynamic calibration, the instantaneous value of the physical input varies as a function of time; in other words, the frequency content is greater than 0 Hz. An example of dynamic calibration is placement of an accelerometer on a hand held shaker calibrator that excites the accelerometer at a frequency of 159 Hz and amplitude of 1 g RMS. Here the instantaneous acceleration as a function of time varies as a sinusoidal function and is not constant as for a static calibration. Static calibrations usually require different techniques than dynamic calibrations.

Transducers may be designed to measure physical inputs in static, dynamic, or both static and dynamic mode. Static calibration usually involves applying a sequence of fixed test inputs to obtain calibration curves of measured output versus measured mechanical inputs as described in IRIG 118-12. An example of static calibration is to place a load on wings of an aircraft to calibrate strain gages mounted on the wing. For dynamic calibrations, often a sinusoidal input (for example a 1 kHz sine wave) or random noise input stimulates the transducer. Thus, calibration time may be shorter; however, these types of signals are difficult to apply to transducers mounted inside of structures. Some tests require both static and dynamic measurements of accelerations (vibration), pressure fluctuations (acoustics, boundary flow turbulence), displacements (strain), and other dynamic motions of flight structures. Instrumentation engineers need to remember that the goal is to acquire quality and valid data in a timely matter.

7.4.1 Sample static calibration procedures

Examples of measurements that may require static calibrations include temperatures, flight loads, humidity, and Pitot-static pressure (see Table 7-2). There are numerous techniques for calibrating devices such as thermocouples and strain gage bridges using electrical simulation and reference junctions. In the field, a known input, such as a static pressure, should be applied.

The engineer should understand and refer to the laboratory and manufacturer's calibration procedures. Laboratory simulations should be as realistic as possible. Again, whenever possible, the most desirable calibration is a physical (mechanical) end-to-end laboratory or field calibration. In addition to the sample procedures, RCC 118-12 Chapter 1 contains many other procedures.

Table 7-2. Three-Point Static Sensitivity of an Accelerometer

Transducer Type	Accelerometer
Model	Setra Model 141A
Transducing Technique	Capacitive
Transducer Power Required	+15 VDC (5-15 VDC possible)
Calibration Type	Transducer
Signal Conditioner	Measurements Group Model 2210 Strain Gage Amplifier
Input Exciter	Earth's Local Gravity
Input Amplitude	1 g at local altitude
Input Frequency	DC
Static or Dynamic	Static
Output Recording Method	Spectrum Analyzer, Voltmeter, Paper
Calibration Instructions	This method provides a NIST traceable procedure without requirement for a reference transducer. Connect the accelerometer to the desired power and read the voltage out with a voltmeter, analyzer, or record on tape or a computer file. Flip the accelerometer to the +1 g, 0 g, -1 g, 0 g, and +1 g orientations. At each level, record the voltage out. Plot the data on a graph and determine the best-fit straight line that goes through the calibration points.

A typical calibration plot is shown in Figure 7-1.

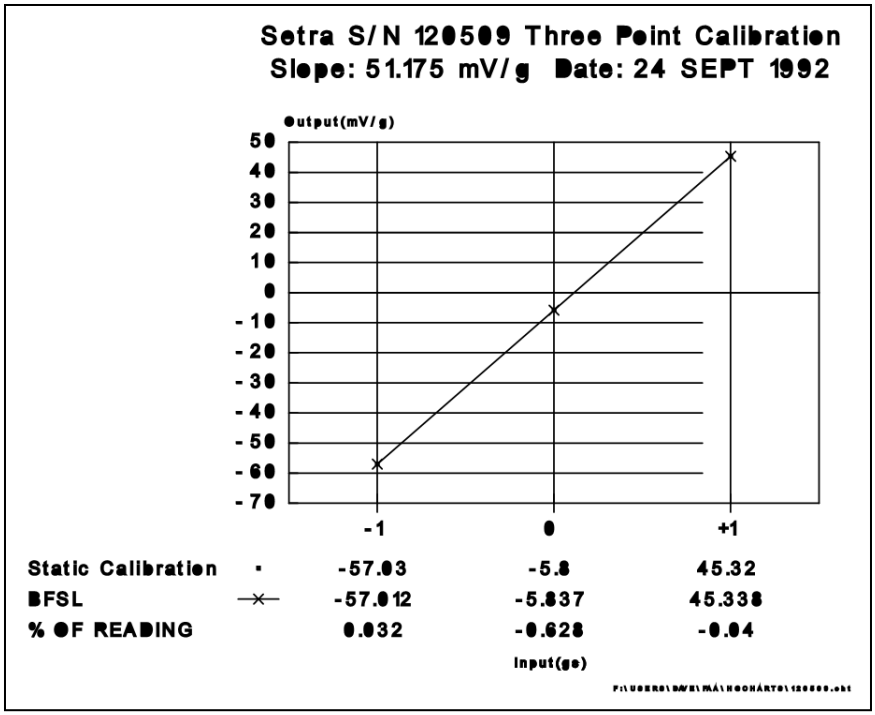

Figure 7-1. Sample Three-Point Calibration Plot

7.4.2 Sample dynamic calibration procedures (1 Hz to 10 kHz)

Himelblau et al. (previously cited) introduces the subject of the calibration of dynamic measurement systems. First, the IES RP discusses electrical calibration procedures including end-to-end electrical calibration, random signal insertion, sinusoidal signal insertion, pulse signal insertion, and reconciliation of calibration discrepancies. End-to-end mechanical calibrations include calibration signal and insertion procedures, random excitation, sinusoidal excitations, step excitations, and reconciliation of calibration discrepancies. Calibrations can be single frequency, frequency sweeps, or random noise calibrations. An understanding of manufacturer and laboratory calibration procedures is essential. When possible, an end-to-end calibration should be accomplished.

The following sample calibration instructions and information are provided for your review.

Table 7-3. Single-Amplitude Single-Frequency Accelerometer Sensitivity

Transducer Type	Accelerometer
Transducing Technique	Piezoelectric
Transducer Power Required	2 mA Constant Current
Calibration Type	Transducer Only
Signal Conditioner	
Input Exciter	B & K Type 4294 Calibration Exciter
Input Amplitude	10 m/s^2 (RMS) +-3% for max load of 70 grams
Input Frequency	159.2 Hz
Static or Dynamic	Dynamic
Output Recording Method	Voltmeter and Paper

Calibration Instructions	Mount the transducer on the Type 4294 B & K Calibration Exciter. Connect the transducer to required power and signal conditioner. Turn on the calibrator and readout the voltage on a voltmeter. Record the accelerometer S/N and sensitivity on a piece of paper. Note that the calibrator level is 10 m/s^2 , which is slightly higher than 1 g RMS. Therefore the sensitivity is Vout * .98 to get sensitivity in terms of volts/g. Thus the calibration equation may be V = .01 g or g = 100 V.

Table 7-4. Acoustic Sensitivity of Pressure Transducer

Transducer Type	Pressure Transducer
Model	Entran Model EPI-070B-5D
Transducing Technique	Strain Gage
Transducer Power Required	+15 VDC
Calibration Type	Transducer + Signal Conditioner
Signal Conditioner	Measurements Group Model 2210 Strain Gage Amplifier
Input Exciter	B & K Model 4221 High-Pressure Microphone Calibrator
Input Amplitude	140 dB SPL at 150 Hz
Input Frequency	150 Hz
Static or Dynamic	Dynamic
Output Recording Method	Spectrum Analyzer, Voltmeter, Paper
Calibration Instructions	A block diagram of the calibration instrumentation set-up is in Figure 7-2 below. Design and fabricate a special fitting to hold the Entran pressure transducer for mounting inside the B & K Type 4221 High-Pressure Microphone Calibrator. Obtain transducer power from the voltage supply inside the Measurement Group Model 2210 strain gage signal conditioner. Connect the output to the differential input amplifier with a gain of 100. Set the calibrator for 140 dB SPL by monitoring the 20 Pa/mV jack on the B and K Type 4221 Calibrator while increasing excitation with the Wavetek Oscillator. Read the RMS amplitude off the spectrum analyzer and record on paper. Calculate the sensitivity using the fact that amplifier gain = 100 and 140 dB SPL = .029 psi (i.e., Vsens = Vout/100/ 029 psi). Write the transducer's S/N and sensitivity on a piece of paper.

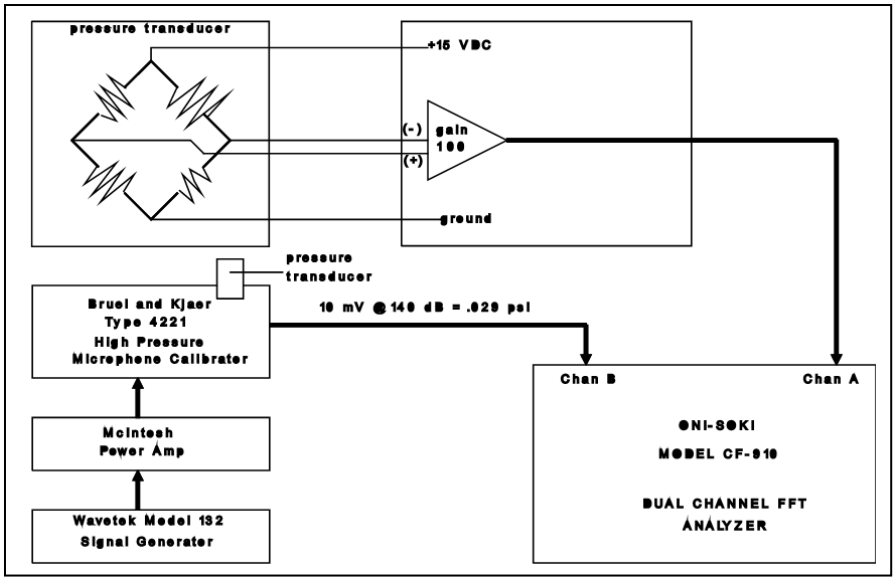

Figure 7-2. Sample Block Diagram for Transducer Calibration

7.4.3 Sample shock tube calibration technique

Beheim, Ned, Masheeb, Kurtz, and Wolff[15] show typical response measurements performed in the Wright State University shock tube for a transducer type of calibration. The shock tube generates a step pressure input that is used to generate a transfer function in the frequency domain as shown in the magnitude and phase of the transfer function given in Figure 7-3 from their work. Here, the transfer function shows that the natural frequency of the pressure sensor is 30 kHz.

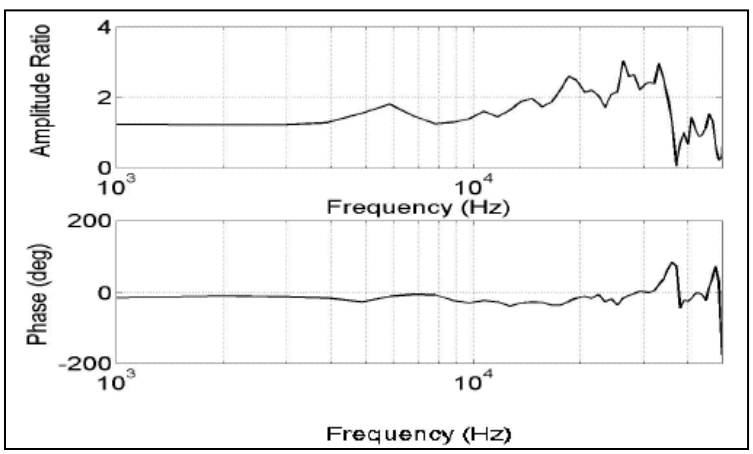

Figure 7-3. Typical Frequency Response

7.4.4 Sample accelerometer frequency response evaluation

A technique to get simultaneous multiple frequency response evaluations of fifteen accelerometers was presented by Peter Stein during the 19th Transducer Workshop. The paper[16]

[15] Beheim et al., *Dynamic Presure Measurements Using Silicon Carbide Transducers*. 19th International Congress on Instrumentation in Aerospace Simulation Facilities. Cleveland, OH. 27-30 August 2001.

[16] Peter K. Stein. *Data Insurance.* Presented during 19th Transducer Workshop, 20-21 June 2000. Available at http://www.wsmr.army.mil/RCCsite/Documents/Transducer%20Workshops.

described an end-to-end calibration technique where the final output was a plot of counts/g versus frequency for each of 15 accelerometers. A typical transfer function is shown. The technique evaluated accelerometers over a range of 0 to 100 Hz. The paper used excitation of accelerometers on a tabletop shaker with random noise to obtain transfer functions of the accelerometer output in counts versus a reference input accelerometer. As seen in Figure 7-4, this calibration contains undesired noise at 60 Hz.

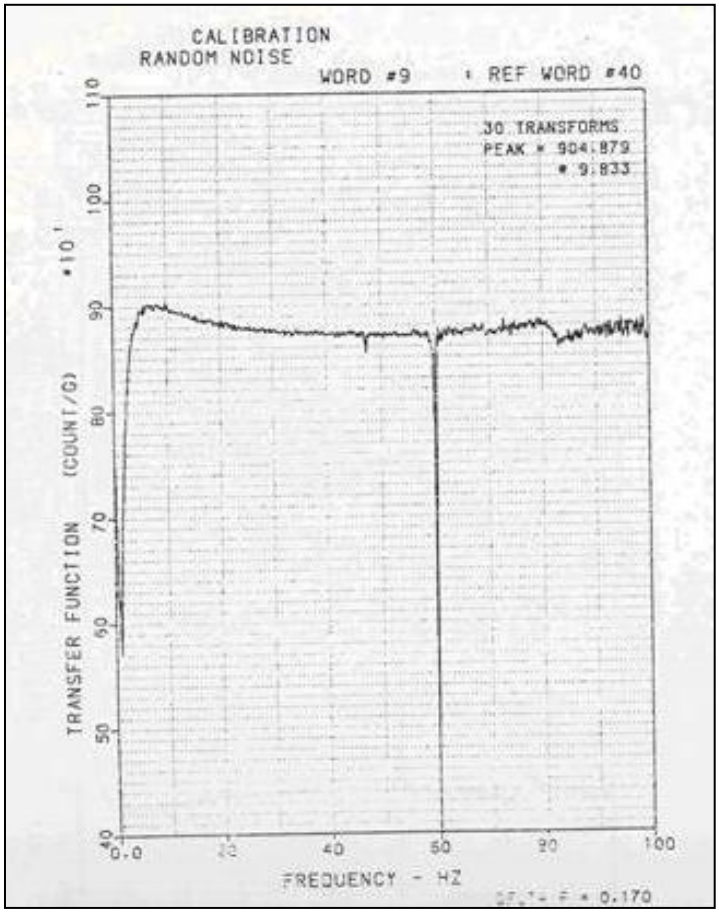

Figure 7-4. Sample Frequency Response

Ideally, the instrumentation engineer should look at the transfer function, phase, and coherence when doing frequency response calibration using this technique.

7.5 Check Channels

Peter Stein[17] stresses the need for check channels and checking procedures in any measurement system. To insure valid data that may be acquired with great effort and expense, check channels or checking procedures are mandatory and cannot be neglected with the advent of computerized measurement systems. There are numerous tests in which little or no thought is given to checking whether the recorded data represents the process of interest and/or one of the environmental factors. Unfortunately, testing can cost millions of dollars and require hundreds

[17] Peter K. Stein. *The Unified Approach to the Engineering of Measurement Systems*. Phoenix: Stein Engineering Services, 7th revised printing 1995.

of data channels in hostile environments. Undesired environmental data may even occupy the same time and frequency scales and create effects even larger than those of the desired data. Since all transducers respond in all ways in which they can to all environmental stimuli, every measurement system must prove its data valid beyond doubt. Whether for the measurement of high-speed transients, pyroshock, explosions, or for steady-state testing, such as vibration exciters for modal analysis and observations of operating machinery, or for simple static testing, diagnostic checks are crucial to data integrity. Check channels occupy channel capacity and checking procedures take time, but without them there is no way to tell valid data from "garbage" data. Bad data looks just as believable as good data!

In most checking procedures the effort is to produce a condition where no output is expected; if an output is produced, it is declared garbage. Today, testing is expensive and computer power is of relatively low cost. The few tests we can afford must be above reproach and yield provably valid data. Check channels should be used for both self-generating and non-self-generating (i.e., those requiring power) transducers.

As shown in the signal processing and earlier calibration section, there is a class of checking procedures where a condition is produced for which a known output is expected. One example is known as the Shunt-Span-Verification (called Shunt calibration) for resistive transducers. This section will not discuss earlier procedures, but will discuss the basic principles and ideas for typical checking procedures.

7.5.1 Typical checking procedures

Impedance-based transducers, such as strain-gage-based load cells, pressure transducers, accelerometers, and strain gages themselves, disconnect the interrogating power (bridge) supply and short-circuit (for voltage-fed systems) the bridge terminals to which it was applied. Any voltage output from the transducer under test conditions cannot be caused by a resistance-strain effect. Thermoelectric, electromagnetic, triboelectric, PE, electrostatic, photovoltaic, ground loop, or other undesired effects might cause the voltage. It has even been documented that dynamic-strain-induced voltages exist in thermocouples and strain-gage-based transducers. Such voltages can always be eliminated by the use of a well-designed carrier system and/or by appropriate shielding (thermal, magnetic, electrostatic, mechanical, optical, etc.). Such bridge-power-defeat switches may be manual or computer-programmable, but provision for them must be made. If bridge power removal creates too much of a thermal shock on the transducer, then bridge power polarity reversal is an option. The output should also reverse polarity.

In pressure measurements where the transducer is connected to the pressure source through tubing, it is always possible to install a valve in the tubing so that the transducer sees no pressure when the valve is closed. The transducer may be vented to atmosphere during such a check. The transducer and the piping are still in the temperature gradient in which they operated; also, the process fluid and the environment are almost always at different temperatures so that a temperature gradient always exists along the connecting tubing). They still vibrate the same way and other environmental factors have all remained the same. Any output during such a check is garbage.

In D/P measurements, the effect of line pressure (common mode pressure) on the transducer must always be checked. It is possible, by means of pneumatic switching, to connect both input ports of such transducers to line pressure (Stein). Any output is now unrelated to D/P (since both ports experience the same input). It is necessary, for dynamic pressures, to make the

tubing length to both ports the same. Only imagination limits the possibilities for these kinds of checks.

7.5.2 Typical check channels

There are two basic types of check channels as follows:

a. Type 1: Those that do not respond to the desired environment, but do to the undesired ones. Examples of Type 1 include:

   (1) unpolarized ferroelectric ceramic transducers (these check channels do respond to many, but not all, of the other environmental factors that may be present during a test);

   (2) Z-cut quartz crystal that does not exhibit PE behavior;

   (3) the 1, 1, 1 cut p-Si crystal that has an effectively zero (very, very low) GF;

   (4) the four-terminal thermocouple is made of two legs each of material A and material B, such as Chromel-P/Alumel. During the test, the A-A and the B-B connections are checked. Any output will alert the experimenter to connector problems, EMI, radio frequency interference, ground loops, and a whole family of thermocouple problems.

b. Type 2: Those that are not exposed to the desired environment but are exposed to all other environmental factors. Examples of Type 2 include:

   (1) a strain gage of the same lot number as the measuring gage is mounted on a coupon of the same material as the test specimen and in the same direction as the measuring gage. The coupon is attached to the test specimen in such a manner that the coupon is not strained (i.e., at one point). It is then in the same environment as the measuring gage but not under strain; this is also known as a dummy gage.

   (2) a pressure transducer mounted in a blind hole but which is vented to atmosphere, right next to the measuring transducer that goes into the pipe. Both are under similar environments, but only one is subjected to pressure.

   (3) an accelerometer suspended from rubber bands, hand-held near each measuring accelerometer on a specimen on an electromagnetically excited vibration table.

Only the imagination of the measurement engineer limits the application of these principles. Refer to the references for a number of case studies illustrating the usefulness of check channels.

7.6 Sample Pitot-Static Calibration

The calibration process for a Pitot-static system consists of supplying a calibrated source of pressurized air to simulate the dynamic pressure source and a calibrated vacuum source to simulate the static pressure source at altitude. Test equipment may use calibrated internal aircraft instruments or more sophisticated test equipment incorporating sensors to drive electronic displays of pressure or altitude. For example, Barfield ramp test equipment (Figure 7-5) provides the pressure either externally, or internally using hand operated air pumps. The

operator connects the sources of pressure, or vacuum, to the Pitot inlet (or probe itself) and the static port. The operator then compares the resulting indications of the aircraft instruments directly to the calibrated instruments that are part of the ramp test set. Methods have also been devised to perform calibrations of Pitot probes or static sources by use of simple manometers (fluid-based pressure meters).

Figure 7-5. Barfield Pitot-Static Ramp Test Set

7.6.1 Calibration of Pitot-static/air data transducer

Calibration of Pitot-static/ADT is accomplished using the following procedures:

a. After installation, make sure that all tube fittings are tight.

b. Make sure to turn off the heating element of the probe and attach the calibration fixture to the probe.

c. Verify that there are no leaks in the system.

d. Perform the calibration of the instrumentation system.

7.7 Calibration Intervals

Throughout the DoD and industry, there are varying policies, procedures, and recommendations regarding calibration intervals for transducers and measurement systems. There are many challenges associated with the recommendations established for calibration intervals, and they differ from one test program to another.

This section discusses the different approaches taken by DoD and industry and provides guidance to help the instrumentation engineer establish or defend the recommended calibration

intervals for flight test measurements. The following information is not a standard or specification; it is a set of recommendations and guidelines based on a collection of best practices throughout DoD and industry.

7.7.1 Challenges

The following is a list of some common challenges that are faced when deciding on calibration interval cycles for a specific project or test program:

- Cost to recalibrate – programs typically don't want to down a test aircraft or test article and pay for the recalibration of measurements.
- Differences between DoD and airframe manufacturers' calibration interval policies and procedures
- Differences between DoD test site calibration interval policies and procedures
- Varying types of environmental conditions to which measurements are exposed (this can change throughout a test program)
- Rough handling of transducers (accelerometers on a store that is installed and removed regularly)
- Criticality of a measurement (i.e., safety of flight measurements)
- Accuracy requirements requested by the customer (accuracy of transducers can degrade over time)
- The lack of a formal calibration process to maintain stability (experienced personnel leave organization)

7.7.2 Transducer calibration interval examples

In an effort to highlight the differences throughout DoD and industry, various activities were researched to determine the practices and processes to be used as examples for the instrumentation engineer.

Fighter Aircraft

- Transducers receive an initial calibration upon receipt from the manufacturer.
- During the development program, the transducers will not be removed from the aircraft.
- Transducers are monitored during pre-flight and test flights to look for drift over time.
- If a problem is determined, the transducer is pulled and checked, calibrated, and if necessary, replaced.

Aircraft Manufacturer

- Historical database for all transducer models
- Start out with 6-month or 1-year calibration cycle
- Transducer calibration intervals are lengthened over time based on historical calibration information to a maximum of 2 years between calibrations.

DoD Test Range

- Project-dependent, typically 6 months to 3 years depending on transducer type, technology, and application
- Depends on test program, schedule, and cost (negotiation)

Transducer Manufacturer

- Recommends a 1-year interval

National Institute of Standards and Technology

- Does not recommend or require any set calibration intervals
- In the absence of customer requirements, labs should adopt internal measurement assurance programs that include cross-comparisons of primary and secondary measurement standards.

7.7.3 Things to consider when establishing calibration intervals

Many factors come into play when deciding how to set calibration intervals for a particular program or project. The following should be taken into consideration depending on the specific project or test.

Sensor Technology

- Older wiper-type resistive transducers, diaphragm-type pressure transducers, and any motorized gyro will drift and may require calibration services as often as 3-12 months.
- Thermocouples have a defined tolerance and as long as the weld is intact they should not drift out of that range. So if you have accounted for the inherent drift of the thermocouple you should not need to recalibrate a thermocouple.

Installation

- Some sensors cannot be calibrated once they are installed. Glue-on sensors, microphones, and pressure transducers may be destroyed by removing them. If they are suspect they should just be replaced.
- Follow the transducer manufacturer's recommendations during installation to not skew data or introduce error into the measurement.
- Criticality of service is an issue but not that important if sensor selection was done properly and sanity checks are applied. Is the parameter for academia or for flight test qualification? Ideally in both cases you would want the closest, most accurate measurement possible, but at what cost?

Operating Environment

- Environmental conditions can vary widely from one location to another on a test article or test program. Temperature (high and low), vibration, shock, humidity, salt,

sand, EMI, RF energy, etc., must be considered if there is a potential for a sensor/transducer to be damaged over time due to harsh environmental conditions.

- Use of a transducer near or outside of the specification limits can damage them and cause a shift in the output.

Data Acquisition System

- Sensors/transducers are only part of the measurement system. There are various signal conditioning cards in the data acquisition systems that must be considered when it comes to their performance and reliability over time. Some measurement systems operate for years (unless they fail) and are typically not recalibrated.
- End-to-end calibrations of the measurement system are one way of accounting for the signal conditioning and data acquisition units. Note: reference RCC 118-12.

7.7.4 Calibration interval recommendations and guidelines

The recommendations listed below provide guidance to the instrumentation engineer and are based on the examples, experience, and information provided by various DoD and industry experienced professionals. Intervals should be based on historical calibration information for a particular sensor/transducer. The periods take into account that the transducers are exercised on the test article, whether instrumentation is powered or not.

Every 6 months

- Diaphragm-type cockpit gages
- Flight control measurements (regardless of transducer type)
- G-meters
- Mechanical gyros (spinning-mass type)
- Pressure transducers – diaphragm type
- Air data transducers – diaphragm type
- Potentiometers (linear and rotational)
- Humidity sensors
- Gas sensors

Every 12 months

- Accelerometers
- Flow meters (mechanical type)
- Angular accelerometers
- Force sensors
- Load cells
- LVDTs/RVDTs (except flight control measurements)

- Microphones
- Outside air temperature probes
- Pressure transducers (piezoresistive type)
- RTDs
- Strain gages (end-to-end system calibration)
- Synchro/resolvers (except flight control measurements)
- Thermocouples (end-to-end system calibration)

Every 2 years

- Voltage and current sensors
- Solid-state transducers/sensors
- Sensors with a 2-year confidence based on historical use

Beyond 2 Years

- Any calibration intervals beyond the 2-year timeframe should be determined by individual activities based on historical use.
- Should the transducer calibration exceed 2 years, the end user of the data should be informed of the risks involved.

7.7.5 Critical measurement calibration intervals

Some test measurements are critical in nature due to safety requirements and environmental conditions. Instrumentation engineers for individual activities should consult their safety department and flight clearance authorities to develop calibration recommendations for measurements that are deemed critical. Also consider that the resulting measurement may be an input to a derived measurement at the ground station.

7.7.6 Detailed matrix recommendation

Developing a detailed set of calibration intervals using the above recommendations using test-specific or site-specific factors for each individual activity is highly recommended. A detailed matrix is a good way of setting calibration interval policies within a test activity or command. Table 7-5 is an example of what the matrix might look like.

Table 7-5. Calibration Interval Matrix

Transducer Type	Monitor and Replace	Typical	Test Usage	Critical Meas.	Harsh Environment	Notes
Ballistic Pressure Transducer			10 events			
Strain Gage		12 mo.		6 mo.		
Potentiometer					3 mo.	

RVDT						Except fit control measures
LVDT						Except fit control measures
Synchro	X					Except fit control measures
Accel - Capacitive					6 mo.	
Accel - Piezoresistive						
Accel - Constant Current						
Mechanical Gyros						

7.8 Conclusions

All data experimentally acquired must provide a “yes” answer to the following questions:

a. Could these data have been acquired by that measurement system without distortion and/or contamination and without affecting the process being observed?

b. Can this be proven beyond a shadow of reasonable doubt?”

Check channels and procedures provide one of the means for answering “yes” to the above questions. Another important question is "But where are your check channels?” This question is often answered by "We don't waste our channel capacity and budget on channels that record nothing. We only collect real data!" The results of such tests may be good candidates for the wastebasket. Engineers cannot afford to waste time or budget on data that have not been validated by check channels or procedures.

This page intentionally left blank.

CHAPTER 8

Telemetry Transmission and Reception

8.1 Introduction

As was mentioned in the Introduction (Chapter 1), TM is the method of getting information from one place to another. The information can be from a test vehicle in the air, on the ground (such as a test course), or stationary in a laboratory.

For this discussion, the TM system shall be defined as everything required to convert baseband data to RF data and back again at some different location. This includes modulation of the baseband data (information signal) to an RF carrier, transmission, acquiring, receiving, and demodulation of the signal back into its original baseband form. Components of a TM system from the test-vehicle side include the information signal, any required encryption or pre-modulation filtering, a TM transmitter, a power splitter if required, and vehicle antenna(s). Components of a TM system on the receiving side include reception antenna(s), pre-amps and splitters, TM receiver, demodulator, decrypter, and bit synchronizer, if required.

This handbook is not meant to replace the information presented in IRIG Standard 106, RCC 118-12, and RCC 119-06. The references cover every aspect of PCM/FM and Feher quadrature phase shift keying (FQPSK) transmission, reception, and demodulation. The references provide in-depth coverage of definitions, performance criteria and measurements, and standard TM system measurements and optimization. The detailed information provided therein is considered out of scope of this document.

8.2 Telemetry System

A typical CPFSK, more commonly referred to as PCM/FM, transmit system is shown in Figure 8-1 below, which consists of a data source, pre-mod filter, TM transmitter, and transmitting antenna.

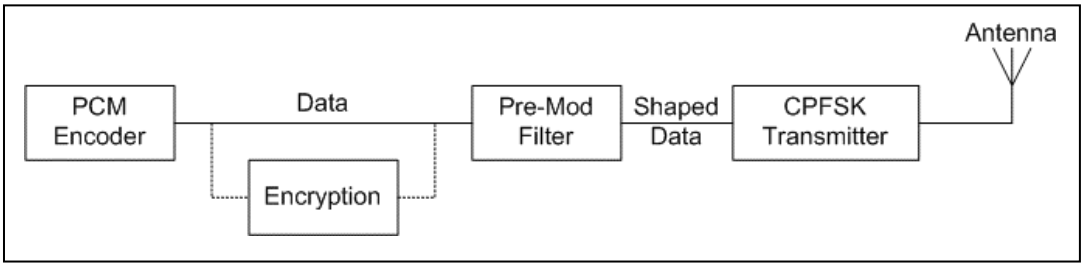

Figure 8-1. Typical Continuous Phase Frequency Shift Keying System

The data source can be anything containing the data required for transmission, including a PCM encoder, instrumentation system control unit, and laptop computer. The baseband data signal consists of ones and zeros that the PCM encoder uses to encode the captured data. There are many ways to represent a one or a zero, but the technique most commonly used is non-return-to-zero, level (NRZ-L) coding (Figure 8-2). In the NRZ-L representation, a bit pulse remains in one of its two levels for the entire bit interval. Figure 8-2 provides a sample NRZ-L representation.

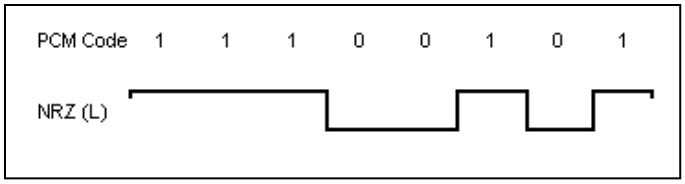

Figure 8-2. Non-Return-to-Zero Representation

The baseband data is then filtered, or shaped, to decrease the spectral content of the baseband waveform. This in turn contains the spectral content of the modulated carrier. Per RCC Document 119-06 (cited in preface), for NRZ-L data, optimum filtering for CPFSK can be obtained by using a linear-phase low-pass filter set at 0.7 x (bit rate) of at least 4 poles, with 6 poles being preferable. After the baseband data is filtered, amplitude of the waveform becomes a concern because this sets the carrier deviation, which is the amount the carrier will move from center frequency. Different transmitters will act differently, so transmitter manufacturers' specifications normally give this number in volts/MHz. This number is called the deviation sensitivity of the transmitter. Again, per RCC Document 119-06, peak deviation is set to 0.35 x (bit rate) or peak-to-peak deviation of 0.7 x (bit rate). Therefore, for a 1 Mbps PCM stream, peak deviation will be 350 kHz or peak-to-peak deviation will be 700 kHz. A typical CPFSK waveform is shown in Figure 8-3.

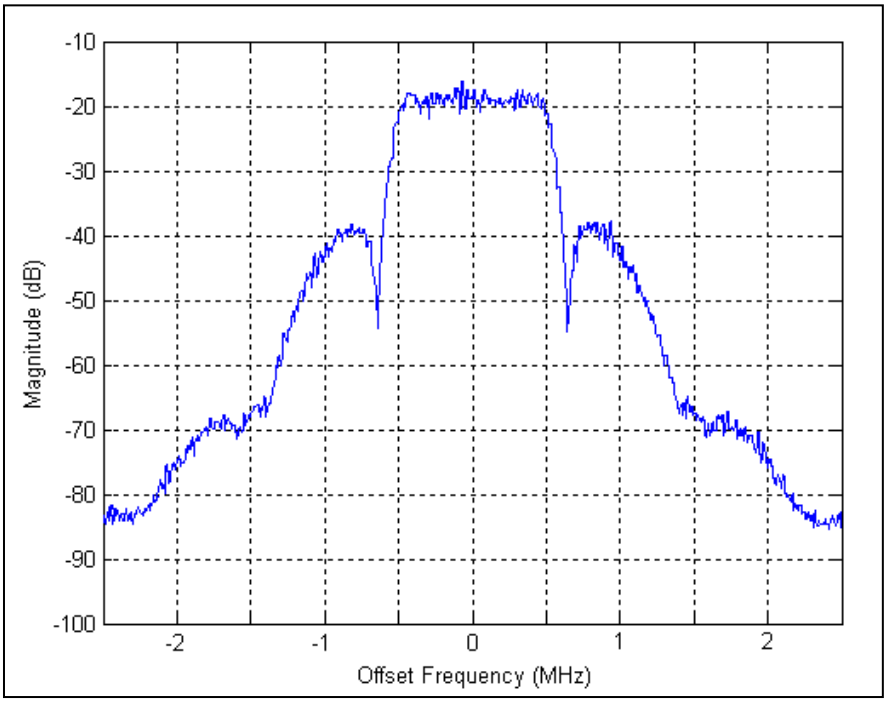

Figure 8-3. 1 Mbps Continuous Phase Frequency Shift Keying Waveform

Usually, the transmitter deviation is set on the transmitter with a potentiometer within the transmitter. If available, the deviation can also be set by the pre-modulation filter if it has an amplitude-adjustable output.

One device shown in Figure 8-1 above is an encryption device. This device takes in baseband data from the data source and outputs ciphered data based upon a key that is loaded for the mission that day. The device that performs the encryption is approved by the National

Security Agency (NSA) and is packaged in such a way as not to emit or conduct emissions; it also passes all associated Telecommunications Electronics Material Protected from Emanating Spurious Transmissions tests. These units, or support packages, also provide filtered power for the TM transmitter and (sometimes) the data source.

The CPFSK TM transmitter modulates the filtered baseband signal onto an RF carrier using as shown in Figure 8-4, which shows the input to the transmitter, *m(t)*, and the output of the transmitter, *x(t)*. The equation for the output has a varying term, $\phi(t)$, that is the phase. Frequency is the time derivative of the phase. Since the phase is proportional to the integral of *m(t)* and the carrier frequency is proportional to the baseband signal *m(t)*, the output is therefore:

$$\boxed{\phi(t) = 2\pi f \int m(\lambda)d\lambda} \qquad \text{Eqn. 8-1}$$

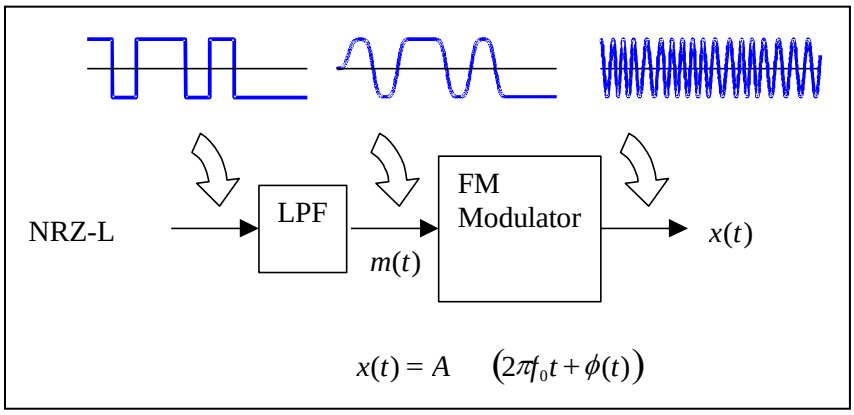

Figure 8-4. FM Modulator

While on the subject of TM transmitters, there are many different ways of modulating an RF carrier with an information signal. The CPFSK was discussed above as the traditional way of transmitting data that frequency modulates the carrier. Today, another test range standard exists that modulates the phase of the carrier. These techniques are based upon QPSK. The adopted type specifically shapes the baseband waveform before modulating the phase of the carrier. These two standards are known as Shaped Offset Quadrature Phase Shift Keying, Telemetry Group (SOQPSK-TG) variant, and FQPSK. To gain a better understanding of these offset QPSK schemes, a quick review of a generic quadrature modulator and how shaped offset quadrature phase shift keying (SOQPSK) and FQPSK modulators differ from this generic model is given below.

A model of a generic IQ modulator is shown in Figure 8-5.

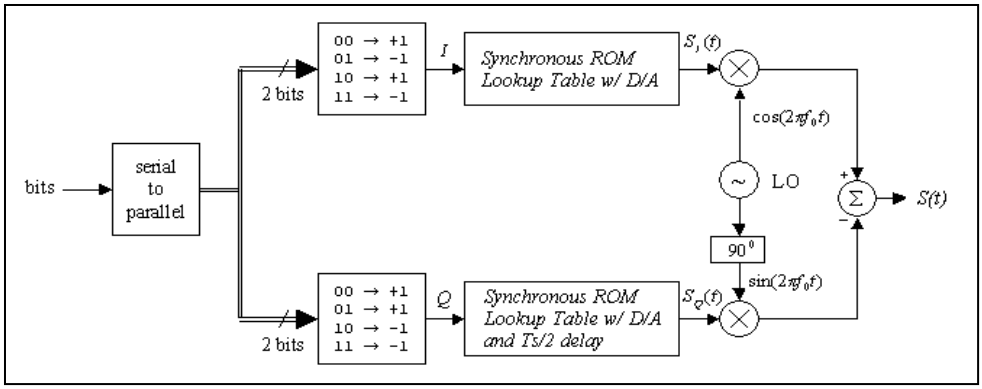

Figure 8-5. Generic Quadrature Modulator

The output signal, *S(t)*, of the modulator can be expressed as the sum of the I- and Q-channels as follows:

$$S(t) = S_I(t)\cos(2\pi f_0 t) + S_Q(t)\sin(2\pi f_0 t) \quad \text{Eqn. 8-2}$$

where $S_I(t)$ is the I-channel (in-phase) information signal;
$S_Q(t)$ is the Q-channel (quadrature) information signal;
f_0 is the local oscillator or the carrier frequency.

A model of a generic FQPSK modulator is shown in Figure 8-6. The diagram illustrates how a FQPSK modulator might be realized/designed.

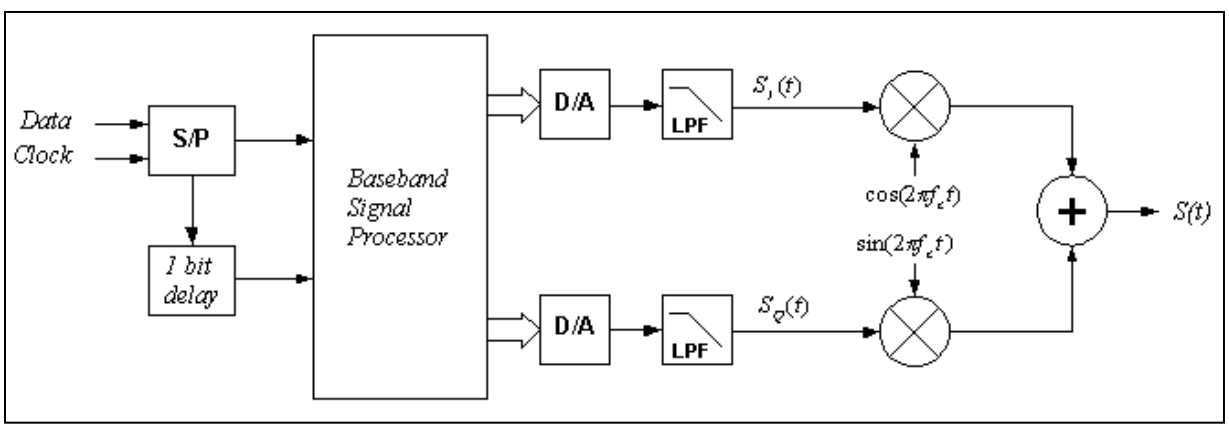

Figure 8-6. Generic FQPSK Modulator

The output signal, *S(t)*, of this modulator is expressed the same as the equation stated above. The FQPSK is just a specific case of SOQPSK where the baseband I and Q data paths are shaped, or filtered (Figure 8-6), in order to contain the transmitted spectrum, much like what the pre-mod filter does for CPFSK. The offset is also shown in Figure 8-6 as the 1-bit delay.

A modulated FQPSK spectrum is shown in Figure 8-7 below. Notice how much less spectrum is occupied by the FQPSK waveform when compared to the CPFSK spectrum, Figure 8-3.

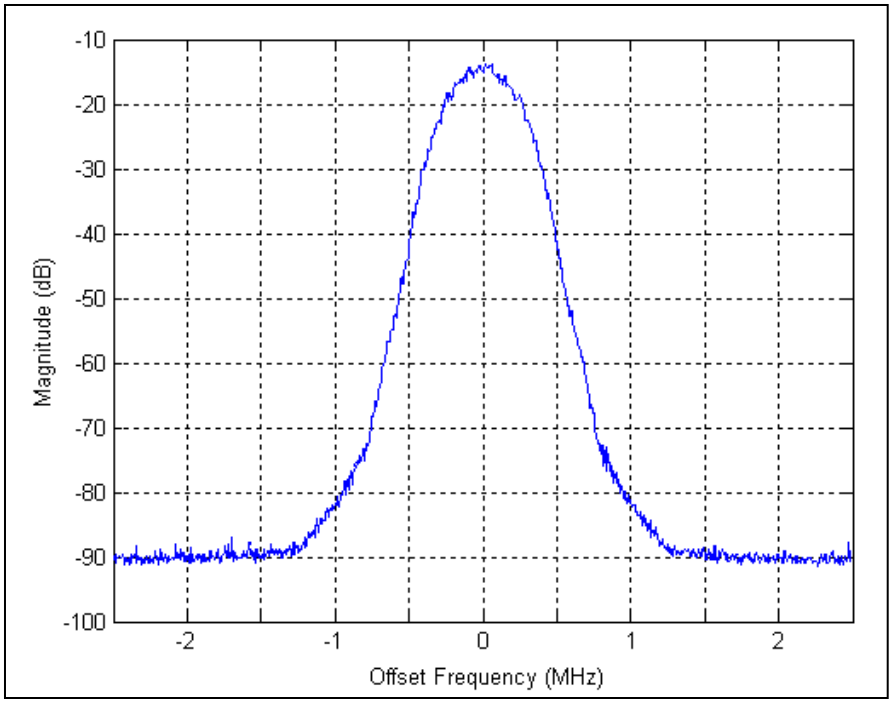

Figure 8-7. 1 Mbps FQPSK Waveform

Although SOQPSK-TG can be generated with the above IQ modulator approach, due to patent issues inherent with FQPSK, SOQPSK-TG is typically generated utilizing a direct digital synthesis (DDS) method. A generic DDS SOQPSK transmitter is shown in Figure 8-8.

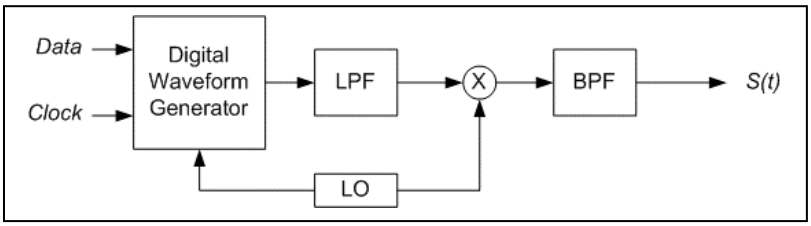

Figure 8-8. Generic SOQPSK Modulator

Notice the waveform is generated directly from the baseband data to some intermediate frequency by the digital waveform generator. This eliminates any offsets and imbalance associated with an IQ modulator. Also because of patent issues, T. J. Hill[18] chose to express the entire SOQPSK waveform family uniquely in terms of impulse excitation of a frequency impulse shaping filter function *g(t)*:

$$\boxed{g(t) = n(t)w(t)} \qquad \text{Eqn. 8-3}$$

where

[18] T. J. Hill. "An enhanced, constant envelope, interoperable shaped offset QPSK (SOQPSK) waveform for improved spectral efficiency." International Telemetering Conference, San Diego, CA. October 23-26, 2000.

$$n(t) \equiv \left[\frac{A\cos \pi\theta_1(t)}{1-4\theta_1^2(t)}\right]\left[\frac{\sin\theta_2(t)}{\theta_2(t)}\right]$$

$$\theta_1(t) = \frac{\rho Bt}{T_s}$$

$$\theta_2(t) = \frac{\pi Bt}{T_s}$$

Eqn. 8-4

and

$$\mathrm{w(t)} \equiv \begin{cases} 1, & \left|\frac{t}{T_s}\right| \le T_1 \\ \frac{1}{2}\left[1+\cos\left(\frac{\pi\left(\left|\frac{t}{T_s}\right|-T_1\right)}{T_2}\right)\right] & T_1 < \left|\frac{t}{T_s}\right| \le T_1+T_2 \\ 0, & \left|\frac{t}{T_s}\right| > T_1+T_2 \end{cases}$$

Eqn. 8-5

As can be seen, there is an infinite amount of variants of SOQPSK by varying the parameters ρ, β, T_1, and T_2. The SOQPSK-TG refers to the variant with the following parameters:

Parameter	ρ	β	T_1	T_2
SOQPSK-TG	0.70	1.25	1.5	0.50

These parameters were arrived upon through simulation (Hill, previously cited) and testing and found to be a good trade-off between detection efficiency, spectral occupancy, and interoperability. The waveform is almost identical to the FQPSK waveform in Figure 8-7 with very similar detection efficiency.

Unlike the CPFSK TM transmitter, this new generation of TM transmitters requires both baseband data and a synchronous clock. Also, no pre-mod filter is required because the baseband wave shaping occurs internally to the transmitter. A typical SOQPSK/FQPSK system can be seen at Figure 8-9.

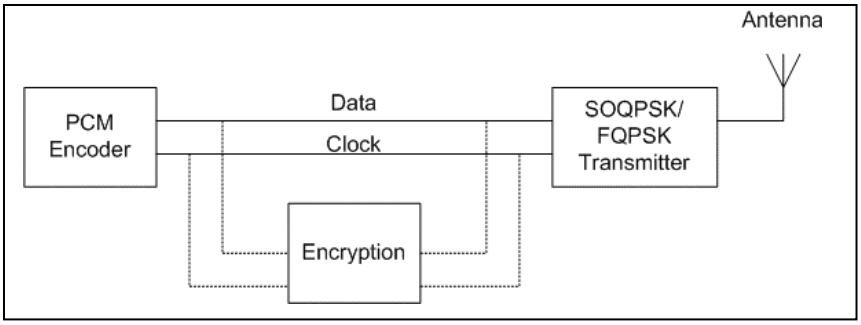

Figure 8-9. Typical SOQPSK/FQPSK System

The last item on the test vehicle, and quite possibly the most overlooked, is the TM antenna. For aircraft applications, this antenna is normally a dipole antenna in the shape of a blade. For missile applications, conformal microstrip antennas have been designed and used. It has also been common practice to install upper- and lower-fuselage antennas in order to create a 360° sphere of antenna coverage. This attempts to prevent the fuselage from shadowing the receive antenna from signals sent from the transmit antenna. Unfortunately, this scenario sometimes causes more problems than it cures due to the co-channel interference introduced by the second antenna. At the receive station, this interference is indistinguishable from multipath effect due to the TM channel. Great care must be taken when choosing locations for TM antennas in order to avoid co-channel interference and to avoid interference with other aircraft systems. Normal airborne TM frequencies are in the range of 1435-1535 MHz and 2200-2400 MHz. The lower frequency band is referred to as L-Band while the upper frequency band is referred to as S-Band. The L-Band frequencies have the potential to interfere with on-board communication and navigation equipment. One particularly susceptible system is the GPS installed in most military vehicles. The L1 frequency for GPS is located at 1575.42 MHz, which is located just outside of the L-Band TM spectrum. Numerous programs have interfered with their GPS systems by transmitting L-Band TM in close proximity (in space and frequency) to the GPS antenna. A GPS pre-amp saturation, TM transmitter excess noise at L1, and TM transmitter spurs are all examples of how a TM signal can cause GPS degradations.

8.3 Transmission Channel

Once the data leaves the test vehicle in the form of a modulated RF carrier through a TM antenna, it will experience anomalies associated with the transmission medium. Normally, this medium is air. As with any moving test platform, multipath events occur during the reception of the signal. Most transmission antennas on test vehicles are omnidirectional, which means the transmitted signal is sent in all directions. When more than one path, or ray, makes it into the receive antenna feed, multipath effects occur. Most of the time, there is one dominant ray received due to the narrow beam width of the receive antenna. Larger parabolic antennas have narrower beam widths, and narrower beam widths mean a smaller area in which a reflected ray can be received). When one or more of these reflected paths, caused by terrain variations between the test vehicle and receive antenna, are within the beam width of the antenna, it can either add constructively or destructively to the direct ray. The direct ray is also known as the line-of-site ray.

Brigham Young University has developed a channel model of the TM channel at Edwards AFB. It was found that a three ray model was able to fit most of the observed

anomalies. The model is composed of three propagation paths; these are a line-of-site path and two specular reflection paths. The first specular reflection path is characterized by a relative amplitude of 70-96% to the line-of-site ray with a delay of 10-80 nanoseconds (ns). The second specular reflection path has a relative amplitude of 2-8% of the line-of-site path with a mean delay of 155 ns with a delay spread of 74 ns. To visualize this scenario, refer to Figure 8-10.

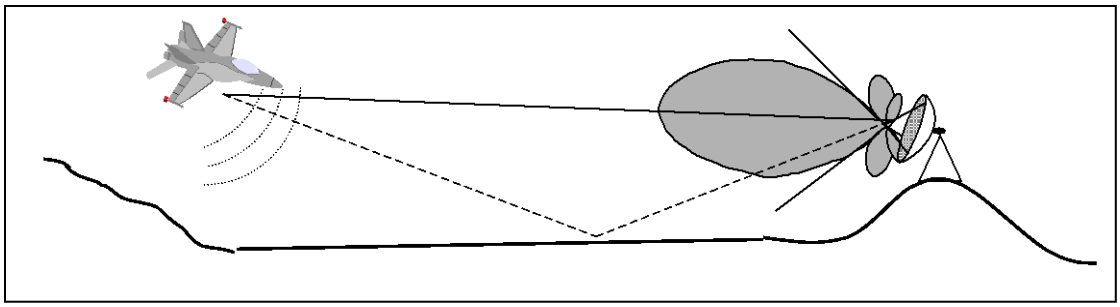

Figure 8-10. Telemetry Channel

8.4 Receiving Station

The roles of the receiving station are to receive the transmitted signal and to recreate the original data on the ground. These roles include the following activities:

a. tracking the test vehicle based on received signal strength (sometimes slaved to radar information);

b. receiving the transmitted TM through the antenna feed;

c. amplifying and filtering the received TM;

d. sending the TM to a TM receiver;

e. applying proper filtering within the receiver;

f. demodulating, either within the receiver or with an external demodulator;

g. creating a data stream with a clock with a bit synchronizer (only for CPFSK), and decrypting it (if encrypted);

h. supplying the customer with the original baseband data from the test vehicle.

Figure 8-11 represents a “typical” TM receive station. An RF signal is received by an antenna, which is normally a dish type with two orthogonal linear feeds. Circular polarizations, both left hand and right hand, are then derived from these orthogonal signals. These two polarizations are then sent to multi-couplers associated with each polarization. These multi-couplers are used to split the signals. One path is for antenna pointing and the other is for the actual data stream. Typically, receivers are dedicated to the antenna pointing function because the optimal automatic gain control time constants are different for tracking and data reception. To combine these functions and use one receiver for both would be a compromise.

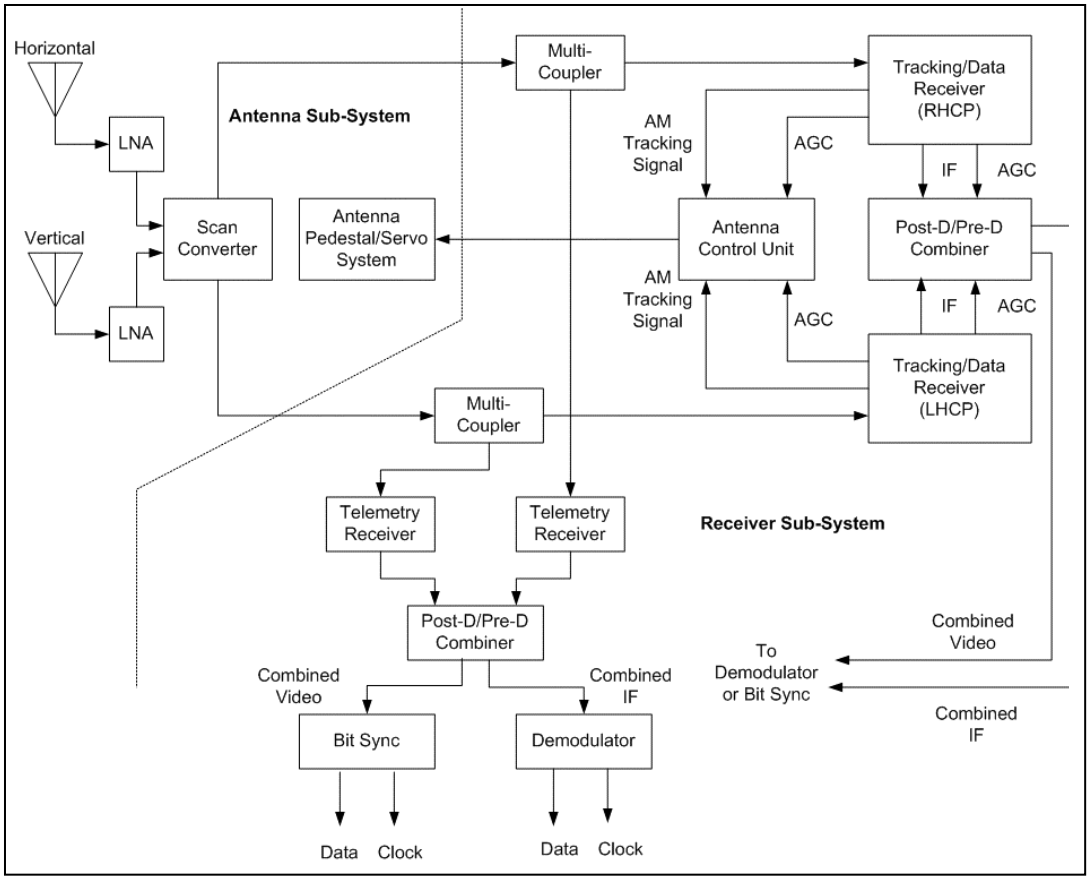

Figure 8-11. Typical Telemetry Receiving Station

The receiver dedicated to the data stream must be configured for the type of data being transmitted. Set-up configurations between CPFSK and SOQPSK/FQPSK will differ. For optimum receiver set-ups and trade-offs in terms of IF and video bandwidths for CPFSK modulation, refer to the Telemetry Application Handbook. Most TM receivers have built-in FM detectors for CPFSK. The output of this detector is then routed to an external bit synchronizer. For the demodulation of FQPSK, an external demodulator is required. The second intermediate frequency from the receiver (usually 20 or 70 MHz) is fed to the demodulator, which produces data and a synchronous clock. For FQPSK, a bit synchronizer is not required. Out of the demodulator for FQPSK, or out of the bit synchronizer for CPFSK, is the recovered baseband data, usually NRZ-L with its associated clock. Ideally, this data is a reconstruction of the transmitted bit stream. From here, the data is sent to the user(s) through various test range infrastructures.

8.5 Link Analysis

A link analysis is a measure of how well the TM link will perform. System gains and losses are calculated, added together, and the resulting number is called the link budget. For the TM channel, the gains and losses can be grouped together for the transmit system, the transmission media or channel, and the receive system. A typical equation (Friis equation) for calculating the received power (P_r) can be expressed as:

$$P_r = \frac{P_t G_t G_r}{L_{path}}$$

Eqn. 8-6

where P_t is the power measured at the receive antenna;
G_t is the gain of the receive antenna;
G_r is the gain of the receive antenna;
L_{path} is the free space path loss.

For the transmit system, effective isotropic radiated power (EIRP) is calculated. This takes into account the system losses and gains on the transmit side. A typical equation for EIRP is:

$$EIRP = \frac{P_t * G_t}{L_t}$$

Eqn. 8-7

where P_t is the transmit power;
G_t is the gains associated with the transmit system (usually the antenna gain);
L_t is the losses associated with the transmit system (usually cable losses).

The channel has a loss associated with it. If the media is air, free space path loss is assumed. The equation for free space path loss is:

$$L_{path} = \left(\frac{4\pi R}{\lambda_0}\right)^2$$

Eqn. 8-8

where R is the range;
λ_0 is the wavelength ($\lambda_0 = c/f$);
c is the speed of light (3×10^8 m/s);
f is the frequency in Hz.

The receive system normally has an amplifier located at the antenna feed. Since the received signal strength is so low, noise in the receiver system could easily dominate the received signal strength and render the signal unrecoverable. To characterize the receive system, a figure-of-merit of G/T is used. For our purposes, it will be referred to as G_r/T_{rsys}. For additional information about receive system G/T calculation refer to the Telemetry Systems Radio Frequency Handbook.

The result of this work gives us the received power or carrier power. To extend this one further step, it is also useful to have an idea about carrier to noise ratio at the receiver. To add this, the received carrier can be divided by kB where k is Boltzmann's constant and B is the receiver's bandwidth (usually the second intermediate frequency bandwidth). Putting this together, the following equation results:

$$\frac{C}{N} = \left(\frac{P_t G_t}{L_t}\right)\left(\frac{1}{L_{path}}\right)\left(\frac{G_r}{T_{rsys}}\right)\left(\frac{1}{kB}\right) \qquad \text{Eqn. 8-9}$$

8.6 E_b/N_0

There is one figure-of-merit test for a TM system that deserves some mention. The ratio E_b/N_0 is frequently used to represent the input signal power required per bit of information per second in the presence of a given noise power spectral density of N_0 (W/Hz) for a given bit error rate (BER), E_b/N_0. E_b is the average signal energy per transmitted bit. N_0 is the noise spectral density normalized to a 1-Hz bandwidth. Thus,

$$E_b = \frac{C}{f_b} \qquad \text{Eqn. 8-10}$$

where C is the total received power in watts;
f_b is the bit rate in Hz.

Expressed in dB,

$$\underset{\text{(dB)}}{E_b/N_0} = \underset{\text{(dB - Hz)}}{C/N_0} \underset{\text{(dB - Hz)}}{- 10\log f_b} \qquad \text{Eqn. 8-11}$$

N_0 is assumed to be a measured value associated with the effective noise bandwidth of the channel and receiver used. The third parameter is:

$$N_0 = \frac{N}{B_e} \qquad \text{Eqn. 8-12}$$

where N is the total noise power measured at the receiver or demodulator input and B_e is the receiver-effective noise bandwidth.

Effective noise bandwidth is defined as the bandwidth B_e of an ideal rectangular band-pass filter with reference power gain g_r. The reference gain is taken as the value of power gain at the center of the receiver IF frequency band. Given g_r, actual receiver power gain $g(f)$ is measured and integrated over a suitable frequency range (f_1, f_2) to obtain the following:

$$B_e = \frac{\int_{f_1}^{f_2} g(f)\,df}{g_r} \qquad \text{Eqn. 8-13}$$

This results in the following familiar equation:

$$\frac{E_b}{N_0} = \frac{C}{N} * \frac{B}{f_b}$$

Eqn. 8-14

This equation allows the designer a way of checking the system for acceptable performance. Most system specifications give a value of E_b/N_0 versus a BER. By calculating the carrier-to-noise ratio (*C/N*), the designer knows how much link margin exists in the TM system.

A typical plot of E_b/N_0 versus a BER is shown in Figure 8-12. The values are typical for a SOQPSK or FQPSK waveform with a well performing receiver in the system.

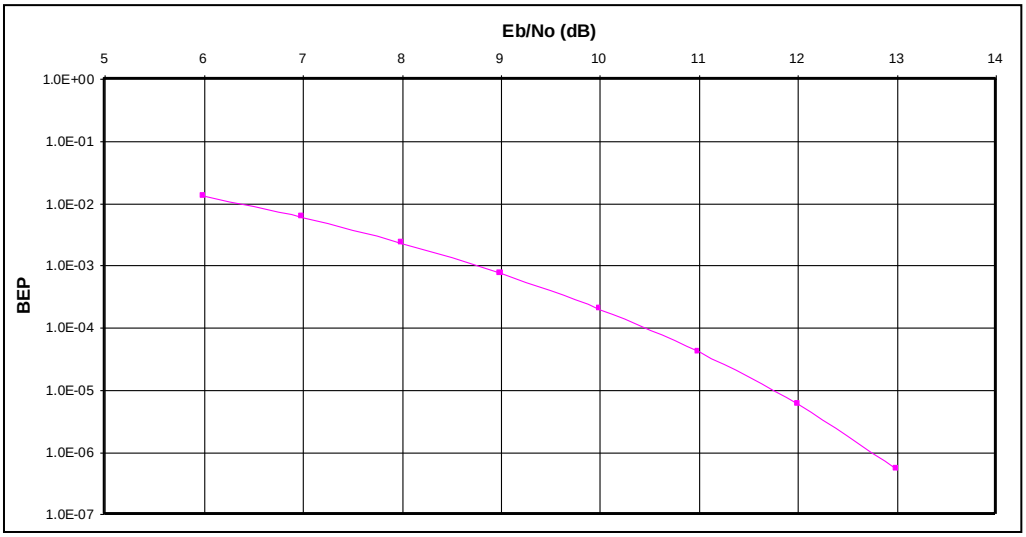

Figure 8-12. Typical E_b/N_0 Plot

CHAPTER 9

Recorders and Recording

9.1 Introduction

The purpose of an airborne recording system in the simplest of terms is to store real-time data on a removable media that can later be used to analyze the test results and to archive the data for future reference. The reason for recording data onboard an aircraft or test vehicle is that, in most cases, the onboard recorder is the primary data source that is analyzed after a test mission. Onboard data recording will also most likely have additional data streams that were not transmitted to the ground due to TM bandwidth limits or other limiting factors. An onboard recording system will allow test programs (that do not require safety of flight data via TM) to be flown independent of the test range support and to perform test missions at remote locations. It also allows test mission personnel to collect data where TM coverage is not possible due to schedule conflicts, cost of range support, weather conditions, or the location of a desired test terrain.

The recording of data can be accomplished using an analog system or a digital system. This section will be addressing only the digital systems that store data on magnetic tape, solid-state memory units, and hard-disk drives. For those systems or requirements still using FM or direct analog recording refer to IRIG Standard 106, Chapter 6 for detailed information. Another informative reference for analog recording is Magnetic Tape Recording Technical Fundamentals[19].

Selecting a recording system to meet the needs of a test program for the present and future is a very important part of completing the onboard instrumentation system. Considerations for selecting the system must include the record time needed for a mission, the types of data streams and their bit rates, installation considerations, recorder accessibility, environmental specifications, compatibility with playback capabilities of data labs, and the overall cost of the system. This section will discuss these selection criteria and information on recording systems in use today and give the pros and cons of each type.

9.2 Recording Systems (Pros and Cons)

Instrumentation recorders on the market today offer up a variety of recording methods and storage media that were not available a few years ago. Discussed below are the more common airborne recording methods in use or available today with some general pros and cons associated with each method.

9.2.1 Longitudinal fixed-head recorder

These systems are identified by fixed record/playback heads with two 10- to 15-inch tape reels, a supply reel, a take-up reel, and a tape path where the tape is pulled across the fixed heads in a longitudinal direction or along the length of the tape. The tape tension across the heads is controlled by various mechanical systems made up of tension sensors, pinch rollers, capstans, and tape guides. The record/playback heads can have up to 28 tracks, with each input data

[19] Bell & Howell Co. Datatape Division. *Magnetic Tape Recording Technical Fundamentals*. Pasadena: Bell & Howell, 1976. Revised 1986.

recorded onto an individual track. Magnetic tape used on these systems is generally ½ or 1" wide on reels of 4600 to 10,800 ft in length. A built-in electronics bay contains a direct record amplifier card for each input to condition the signals prior to being applied to the heads for recording to the tape.

Tape transports pictured in Figure 9-1 are representative of the longitudinal fixed-head recorders.

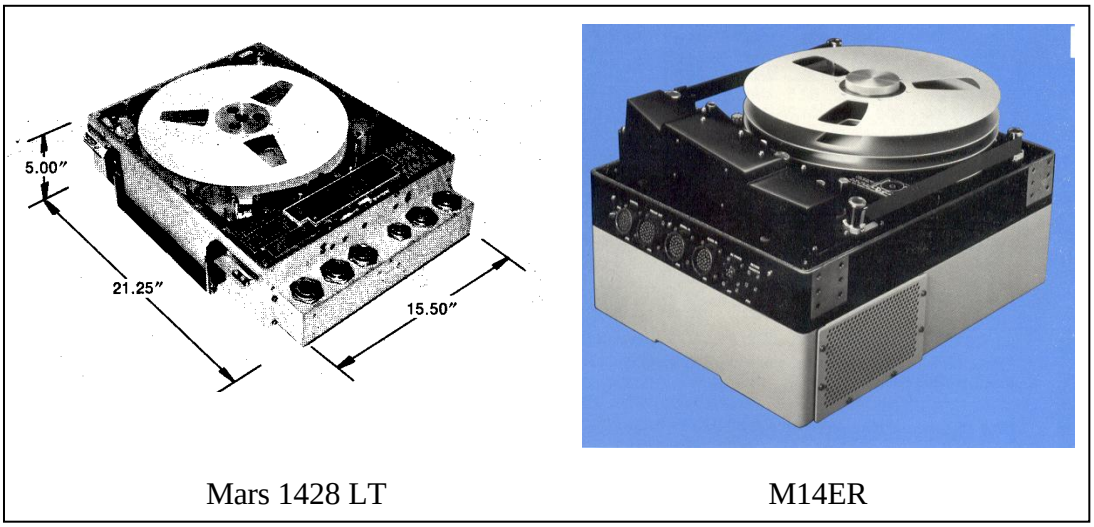

Mars 1428 LT M14ER

Figure 9-1. Longitudinal Fixed-Head Recorder

Pro

a. The capacity to directly record signals of any type that fall within the bandwidth of the recorder at a given tape speed.

b. Magnetic tape is a cost-effective storage medium.

c. Data recorded can be safely archived on the original medium for many years.

d. Magnetic tape recorders can store large volumes of data over several hours.

e. Recorded data is recovered in its native format without an encoder or decoder during playback.

Con

a. Cost to purchase tape transports is very high.

b. Tape transports are highly mechanized and require periodic maintenance to maintain data quality and compatibility with other recorders. Head cleaning, degaussing, tape tension and tracking alignment, and input signal conditioner calibrations are a few of the maintenance items required.

c. Environmental operating envelope is limited without heaters, shock mounts, and installation orientation axis problems to consider.

d. Data rates much over 1 Mbps cannot be recorded.

e. Record time is dependent on tape speed.

f. A BER in the area of $1x10^{-5}$ to $1x10^{-6}$.

g. Operator needed to manually thread tape through tape path, which can create an opportunity for error and data loss.

h. Tape head life is limited and costly to replace.

i. New systems and repair parts are limited in the market today.

j. Different data encoding scheme is required that differs from TM data stream encoding.

9.2.2 Transverse scan, rotary, and magnetic tape digital recorders

The most recognizable characteristic of this group of recording systems is the use of the self-threading ½" Digital Linear Tape or 8-mm video and Advanced Intelligent Tape tape cassettes. There are various approaches by each vendor of putting data onto the tape. Generally, the system involves the moving of the tape and record head in a helical motion around a tape drum of some sorts. These recording systems condition the data streams to a digital format prior to recording to tape; this is accomplished by using external or internal interface modules to encode/multiplex the data to multi-stream file formats shown in IRIG Standard 106 Chapter 6, Chapter 10, or other vendor-proprietary formats.

TEAC V-83AB-F

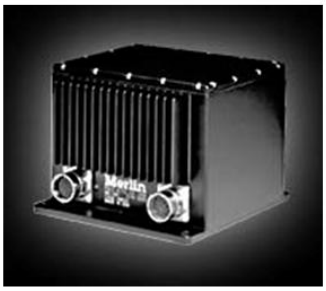

Merlin Me-981 Data

Ampex DCRsi-240

Sypris Model MARS-II or Model MARS-IIe

Figure 9-2. Transverse Recorders

Pro

a. Cost of transports is lower than longitudinal tape recorders.

b. Tape cassettes are low-cost media.

c. Data rates are greatly improved over longitudinal fixed-head recorder.

d. The BER improvemes to $1x10^{-7}$ to $1x10^{-9}$ range.

e. A read-while-write capability is possible for monitoring or processing data during the recording process with some systems.

f. Recording format allows for high record density and extended runtime vs. longitudinal fixed-head recorder tapes.

g. It uses self-threading tape cassettes that are easy to mount.

h. Record time is improved over longitudinal system.

i. Size of tape transports is generally smaller than longitudinal fixed-head recorders.

Con

a. It requires additional encoding/multiplexer systems to format data prior to recording to tape.

b. Data access on playback is slower than solid-state and disk memory devices.

c. Data integrity may be compromised by extreme altitude, temperatures, shocks, vibrations, and altitude.

d. Installation orientation axes of record heads need to be considered.

9.2.3 Solid-state memory recorders

Unlike the reel-to-reel recorder, the solid-state memory recorder has no reels, no tape, and no moving parts to wear out and limit lifetime. Photos of three different recorders can be seen at Figure 9-3. In place of the magnetic tape, the recording system uses a removable module to digitally store data in computer-like memory chips. It is an extremely flexible architecture designed with both data rate and memory-depth growth capabilities. It is similar to the digital recorders in that it records the same types of data and requires external or internal interface modules to encode/multiplex the data to a multi-stream file format before recording to the memory module. The data in the memory module needs to be downloaded to another media before it can be used again. Sometimes the memory module data is downloaded to a digital magnetic tape for archiving but this does not have to occur. For example, the data can be off-loaded to a Redundant Array of Independent Disks (RAID)-type system utilizing a different solid-state memory for archiving.

ENERTEC DS4100 L3 COM S/TAR RM8000 CALCULEX Model 2300

Figure 9-3 Solid-State Memory Recorders

Pro

a. There are no moving parts, so there's very low maintenance.
b. There are sustained data rates up to 1 gigabit per second (Gbps) and are increasing each year.
c. Very large storage capacities are obtainable. From a few gigabytes (GB) up to terabytes.
d. There is reduced weight, volume, and power consumption.
e. A BER of greater than $1x10^{-12}$ is possible.
f. Small size of the cartridge is easy to transport to and from the test platform.
g. Data integrity is not compromised by extreme temperatures, shocks, and vibration.
h. A read-while-write capability is possible for monitoring or processing data during the recording process.
i. Space-saving unit when encoder/multiplexer cards are in the same unit as storage media.

Con

a. As this is a temporary storage device, data needs to be downloaded onto another media for archiving.
b. The cost of memory is relatively high compared to tape and disk media when considering large capacity (100 GB) applications, particularly when a number of cartridges are involved.
c. It requires additional encoding/multiplexer systems to format data prior to recording to memory.
d. Declassification may require significant coordination and approval signatures to satisfy security procedures.

9.2.4 Mechanical hard-disk drive

These recording systems use high-end computer peripheral hard drives that have been made ruggedized to improve the environmental specifications by hermetically sealing the disk drive in a shock-isolated package (Figure 9-4). There are different ways in which the hard drives

can be used. An individual disk drive may be used, or when greater storage capacities are required, multiple disks may be required. There are two multiple-disk systems to choose from; these are the RAID and Just a Bunch Of Disks (JBOD). The difference is in the way data are written to the disk. The RAID system converts the data input to a conventional computer file then writes the file to an array of disks. A JBOD system simply writes the digital bit stream across the entire available disk in a continuous fashion to obtain the maximum possible speed. Both RAID and JBOD systems will support data rates as high as 1 Gbps and the storage capacity is determined by the number of disks stacked together. Recording systems in this class may have the option of using a drop-in solid-state hard-disk drive to expand its capabilities.

Heim D5000 Series General Dynamics RMS 1072 Ampex DDRS 400 (disk opt.)

Figure 9-4. Mechanical Hard Drive Systems

Pro

a. This is low-cost removable media.

b. Digital data rates in the 1 Gbps range and beyond are available.

c. Storage capacity can be 144 GB for a single disk, improving with technology gains.

d. As there is no BER to worry about with a disk recorder, excellent levels of signal fidelity can be achieved.

e. Maintenance costs on disk recorders are minimal.

f. Data can be accessed randomly and manipulated through a computer program and is extremely fast.

g. Data can be easily transferred to a more permanent optical media, such as recordable compact discs (CD-R) or digital video discs (DVD-R), and survive very long storage periods

Con

a. The system has moving parts.

b. As this is temporary storage, data needs to be downloaded onto another medium for archiving.

c. Installation orientation axis of disk drive may need consideration.

d. No read-while-write capability is possible for monitoring or processing data during the recording process.

e. This needs to be ruggedized to overcome environmental shortcomings of temperature, altitude, and low tolerance for shock and vibration.

f. Declassifying units require destroying units.

9.2.5 Solid-state disk drives

Solid-state disk drives are recording systems using non-volatile memory that come in the 2.5-inch and 3.5-inch hard-disk drive standard form factors and in removable Personal Computer Memory Card International Association (PCMCIA) memory cards. Recording capacities range from 64 megabytes for the PCMCIA cards up to 155 GB for the 3.5" form factor. These systems use a disk emulation technology and are a drop in replacement for the individual mechanical Integrated Drive Electronics/Advanced Technology Attachment (IDE/ATA), Small Computer System Interface (SCSI), and Ultra-Wide SCSI hard drives. Figure 9-5 provides examples of some systems using solid-state disk drives.

TTC MMSM-100

AMPOL dataMARS104-II

M-SYSTEMS FFD

Figure 9-5. Solid-State Disk Drives

Pro

a. As there are no moving parts, there's very low maintenance.

b. High data rates and storage capacities are available.

c. This meets military environmental specifications.

d. There is very low power consumption.

e. Data can be accessed randomly and manipulated through a computer program and is extremely fast.

f. Data can be easily transferred to a more permanent optical media, such as CD-R or DVD-R, and survive very long storage periods.

g. This can be installed in any orientation axis.

Con

a. Large capacities are expensive.

b. As this is a temporary storage device, data must be archived onto another medium.

c. Declassification may require significant coordination and approval signatures to satisfy security procedures.

Many of the advantages of the mechanical hard-disk drive are shared by the Solid-State Disk drives; however, there are some differences shown in Table 9-1 that may be important when selecting one system over the other.

Table 9-1. Mechanical Disk Versus Solid-State Flash Disk

Category		Mechanical Disk	Solid-State Flash Disk
Environmental Specifications	Operating Temperature Range	+5°C to +55°C	-40°C to +85°C
	Non-Operating Temperature Range	-40°C to +70°C	-55°C to +95°C
	Operating Shock	20G - 25G	1500G
	Operating Vibration	1G (22-500Hz)	16G (20-2000Hz)
	Humidity	5%-90%	5%-95%
	Operating Altitude	15,000 ft	80,000 ft
	Acoustics, Idle/Ready	2.9 (Bels)	0
Environmental Standards	Shock and Vibration MIL-STD 810F	Does not comply	Complies, MIL-STD 810F
Reliability	Actual/Fielded MTBF	<70,000	>700,000
Performance	Average Seek	7.0-3.0msec	0.5-0.02msec
	Average Latency	5.0-2.0msec	None
	Sustained Read Rate	15.0-50.0MB/sec	2.0-30.0MB/sec
	Sustained Write Rate	10.0-40.0MB/sec	2.0-20.0MB/sec
Power	Power Idle	5.0-0.8 Watts	1.0-0.035 Watts
	Power Read/Write	10.0-5.0 Watts	3.0-0.325 Watts
Security	Delete disk data in emergency without retrieving the data	Does not comply, requires degaussers or total destruction	Complies with: - Fast Secure Erase - Sanitize (Purge)
Capacity	3.5" Form Factor 2.5" Form Factor	40GB-200GB 20GB-60GB	128MB-100GB 128MB-40GB
Cost	Procurement	$70-$600	<$600/GByte

9.3 Data Types and Bit Rates

The data types from the instrumentation system and the aircraft systems will vary, but the typical inputs to the recording system will be PCM data streams, analog signals, IRIG time code,

MIL-STD-1553 data bus, ARINC-429, and video streams. The data rates will vary greatly between low-frequency analog data, medium-speed PCM, high-speed packetized digital messages, and very-high-speed (gigabit) protocols. The data types mentioned here were described in some detail in the previous chapters as to signal format and how they are generated. Described below are the bit rates you can expect to encounter for the more common types of data streams.

9.3.1 Pulse code modulation data

The PCM data rate is a function of the encoding/multiplexer system being used. Class I PCM formats (IRIG Standard 106 Chapter 4) will have a maximum output data rate of 10 Mbps. The PCM systems in use today are recording PCM rates that are commonly in the 1 to 5 Mbps range. Common Airborne Instrumentation System-compliant units have PCM data rates from 125 kbps to 16 Mbps per stream outputs. Newer test programs are planning PCM bit rates up to 80 Mbps by additional multiplexing stages where four of the 5 Mbps PCM streams are combined together to generate a 20 Mbps PCM stream and then four of the 20 Mbps streams are multiplexed to the 80 Mbps PCM.

Bit rates of Class II PCM formats (IRIG Standard 106, Chapter 4) and non-standard PCM data streams may cover a wide band of data rates and must be addressed per their advertised bit rates.

9.3.2 Military Standard 1553

The MIL-STD-1553 is a standard that defines an on-board LAN originally developed for and widely used on military vehicles. The bus operates at 1 Mbps, which is the recorded bit rate when using direct recording. Total MIL-STD-1553 bus capture in IRIG Standard 106, Chapter 8 format can vary depending upon on the encoding system overhead, the number of buses being combined, and the bus loading and auxiliary inputs.

9.3.3 Aeronautical Radio, Incorporated 429

ARINC-429 is the industry standard that is used on virtually all commercial aircraft and is found on some other airborne platforms. Data rates of 12.5 kbps or 100 kbps are the normal bit rate.

9.3.4 Analog data

The analog data bit rate will depend on the ADC encoding sample rate and the information contained in the input signal frequency. Raw sampled cockpit voice, acoustical, and vibration data are some examples of these types of data.

9.3.5 IRIG time code

Timing information is often recorded with the data to synchronize the data with events and other data sources. The RCC time codes (commonly called IRIG time) are typically used as input to data recorders. The IRIG time code aggregate bit rate will depend on the encoding format used in the front end of the recording system. The frequency of IRIG-A is 10 kHz, of IRIG-B is 1 kHz, and of IRIG-G is 100 kHz. When the analog signal is encoded into a digital word, the word length and overhead bits of the encoding system need to be included into the total bit rate calculation.

As an example, in the Multiple Application Recording System (MARS) II encoding system, a 32-bit word length is used and aggregate bit rates are calculated as:

a. IRIG-A bit rate of 320 kbps;

b. IRIG-B bit rate of 32 kbps;

c. IRIG-G bit rate of 3.2 Mbps.

Time that is coded into IRIG Standard 106 Chapter 10 uses a 2880 bps packet for IRIG-A, a 288 bps for IRIG-B, and a 28.8 kbps for IRIG-G. These rates need to be considered when calculating the total bit rate/data capacity requirements for your recording system.

9.3.6 Video

Various video sources that may need recording, include gun, missile, IR, and weapons separation. The most common types of video formats are NTSC, phase alternation by line, Système Electronique Couleur Avec Mémoire, RS170, RS343, and S-Video with bandwidth ranging from approximately 2.4 MHz to 8 MHz. Video is typically recorded to digital media using digital compression algorithms Moving Picture Experts Group (MPEG)-2 or MPEG-4. The IRIG Standard 106 Chapter 10 coding of an NTSC video stream at 6 MHz yields an approximate aggregate bit rate of 1.5 Mbps of MPEG-2 video. A two hour video recording would require around 1.4 GB of memory.

9.3.7 Fibre channel

Fibre Channel uses serial interfaces operating at symbol rates from 133 Mbps up to 4.25 Gbps. The data protocol is determined by the data being transmitted and is used to move data from one high-speed device to another.

9.3.8 FireWire (IEEE-1394B)

Also known as FireWire, the IEEE-1394B standard is a high-speed serial interface for PCs. Traditionally the primary application for this interface has been downloading data from devices such as memory modules. IEEE-1394B operates over CAT-5 twisted pair cable up to 100 Mbps and over optical fiber from 200 Mbps to 3.6 Gbps. Data rates up to 1.6 Gbps are supported over shielded twisted pair cable over distances up to 4.5 m.

9.4 Multi-stream File Formats

Multi-stream file formats are used to record the above data streams that are combined and then sent to a digital medium. Many different vendor-proprietary encoding and multiplexing schemes exist for recording multiple asynchronous input signals onto a digital tape or other storage media. Each scheme will accomplish the recording in its own unique way with satisfactory results, but each will require a system with the native knowledge of the recording method to extract the data results. The IRIG Standard 106 Chapter 6 and Chapter 10 provide the standards for methods to record data to the storage media. Formats detailed in the IRIG Standard 106 include Asynchronous Recorder Multiplexer Output Re-constructor (ARMOR), Analog Digital Adaptable Recorder Input/Output (ADARIO), and IRIG-106 Chapter 10. The formats more widely used today are ARMOR and those in IRIG-106 Chapter 10. They are discussed below.

9.4.1 Asynchronous recorder multiplexer output re-constructor

The ARMOR data format is an encoding scheme that is used to multiplex multiple asynchronous TM data channels into a single composite channel for digital recording, transmission, and subsequent demultiplexing into the original native channels (Figure 9-6). Virtually any combination of PCM, analog, digital parallel, and IRIG time-code signals may be multiplexed into a single PCM data stream with aggregate data rates from 128 Mbps and higher

depending on the vendor and system. Figure 9-6 shows a simplified block diagram of a system using the ARMOR format to record and play back data. This block diagram could also represent the system of vendor-proprietary encoding and multiplexing formats.

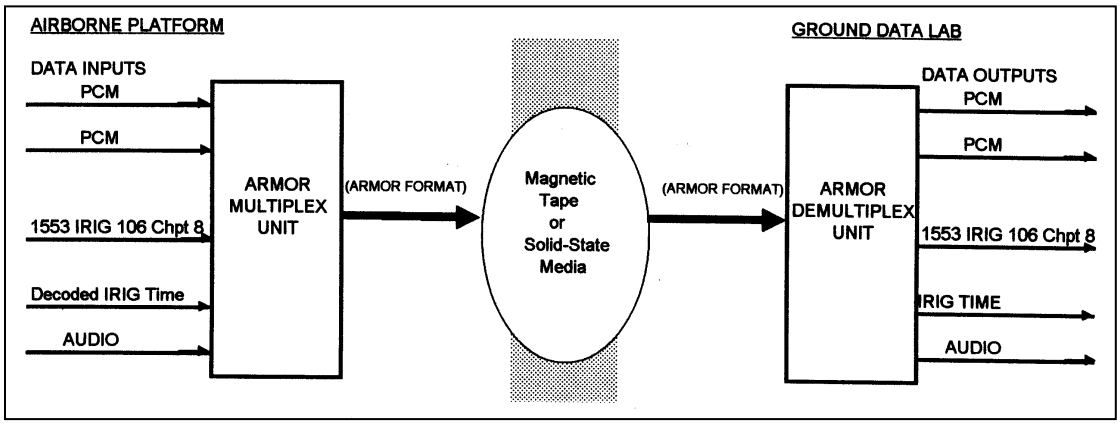

Figure 9-6. Simplified ARMOR Recording System Block Diagram

9.4.2 IRIG-106 Chapter 10

The Chapter 10 recording format is the latest IRIG standard approved for digital recording. Bit rates associated with this format are dependent on the mix of input data types and their respective bit rates; this dependency exists since each data type is encoded into a data packet with a different number of overhead bits.

The data is recorded to the storage media in a packet format and is retained in the packet format for data analysis and archiving. It is not converted to its native form (as was done in ARMOR) or other proprietary encoding and multiplexing schemes. Data is decoded by a common set of playback/data reduction software, but the packet is left intact for future use and archiving. Figure 9-7 depicts a simplified block diagram of how IRIG-106 Chapter 10 data is recorded and played back.

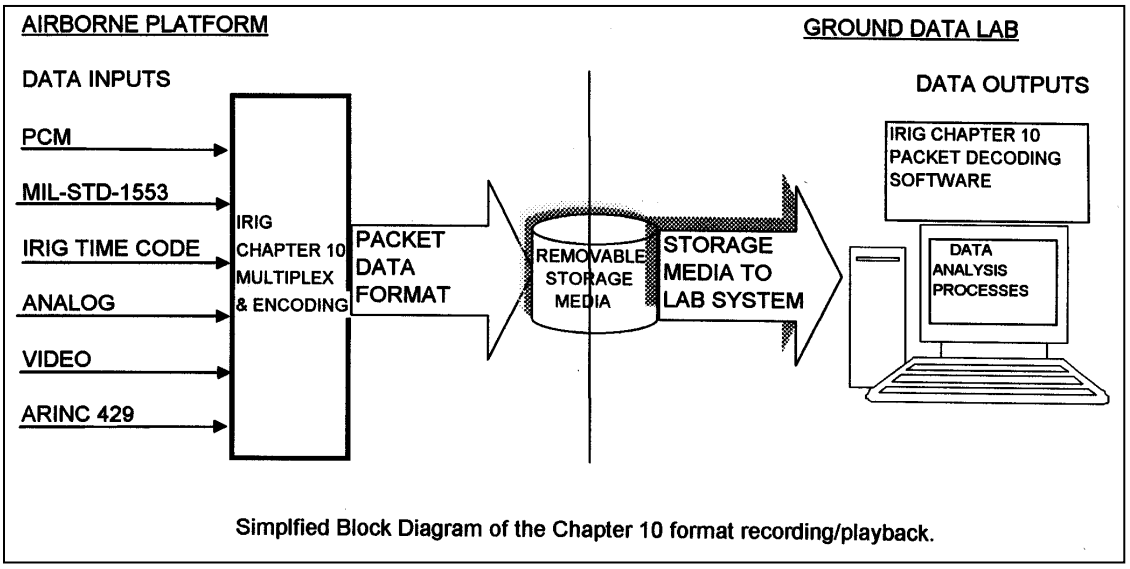

Figure 9-7. Recording/Playback Block Diagram

The IRIG-106 Chapter 10 standardizes the unique proprietary data structures into a format for encoding and decoding test data on recording media other than magnetic tape (see Figure 9-8 below).

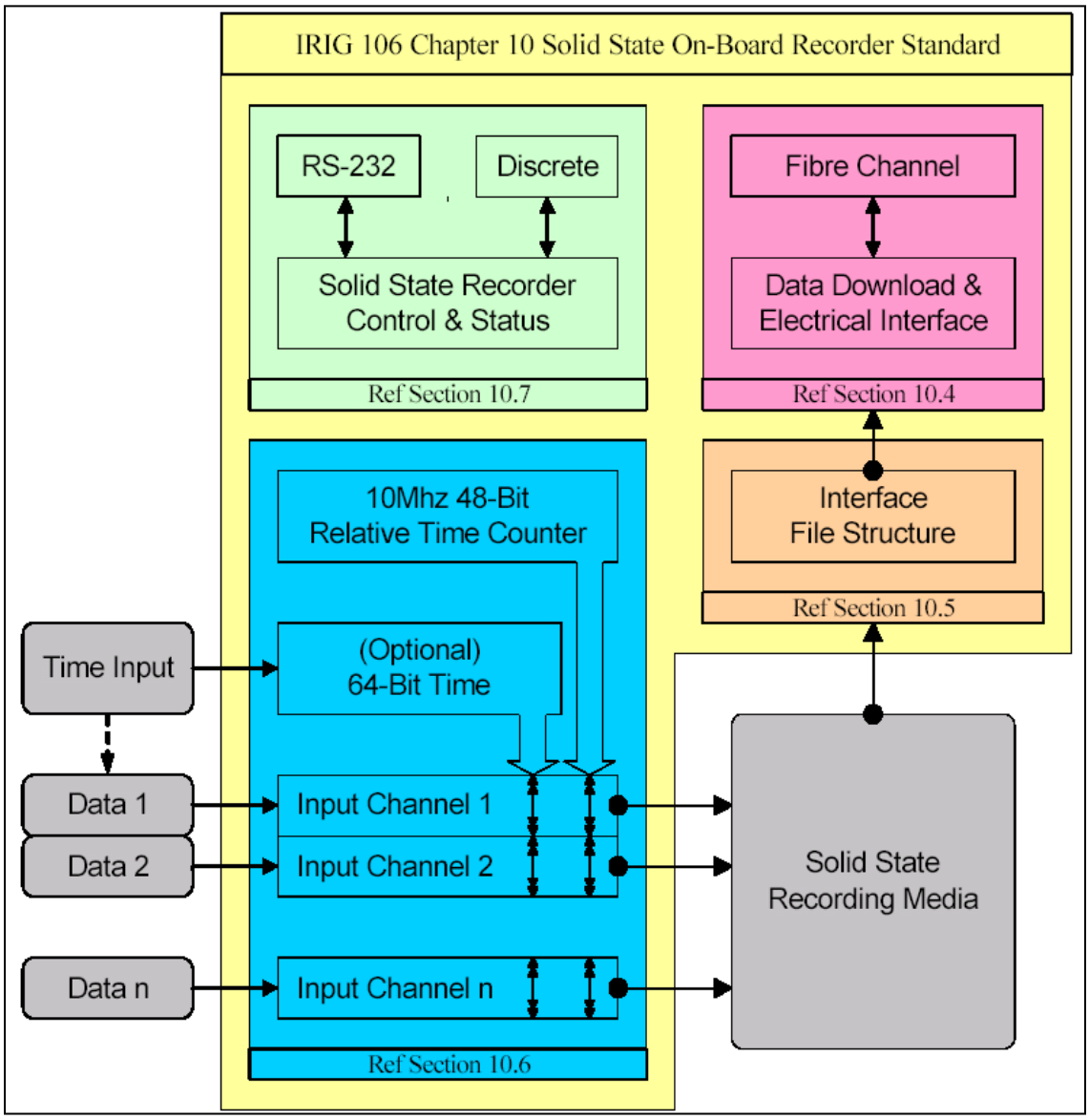

Figure 9-8. Functional Layout of Standard

The standard addresses a broad range of requirements associated with digital data acquisition including the following:

a. data download and interface;

b. one or more multiplexed data streams;

c. one or more single data streams;

d. read-after-write and read-while-write options;

e. data format definitions;

f. recorder control;

g. solid-state media declassification.

The types of data this standard covers are synchronous and asynchronous digital inputs, such as PCM, MIL-STD-1553, time, analog, video, ARINC 429, discrete signals, and RS232/422 communication data. Under this standard, a common software package will allow playback and data reduction from this new random access recording media.

A common interface standard has been established for the solid-state digital recording systems to accomplish the requirements of this standard. They are as follows:

a. data download and electrical interface, which is the physical interface for data access (defined in IRIG Standard 106 Section 10.4);

b. interface file structure that defines the data access structure (defined in IRIG Standard 106, Section 10.5);

c. data format definition that defines data types and packetization requirements (defined in IRIG Standard 106, Section 10.6);

d. solid-state recorder control and status that defines command and control mnemonics, status, and their interfaces (defined in IRIG Standard 106 Section 10.7).

9.5 Record Time Versus Storage Media

The record time needed for a test will be the total time during the test that data recording is required. This may be a continuous block of time or segments within the test. Normally, if the test is too long for continuous recording, the recorder is turned off and on (for example by a test pilot or onboard flight test engineer) at each test point.

Record time of the longitudinal fixed-head recorder is dependent on the size of tape reels and selected tape speed needed to record the desired bandwidth. Shown in Table 9-2 are some typical one-inch tape reel sizes and the record time in hours.

Table 9-2. Reel Size Versus Record Time

RECORD SPEED IPS		7.5	15	30	60	120
Reel size	length (ft)	Record time in hours				
10”	4600	2.0	1.0	0.51	0.26	0.13
12”	7200	3.2	1.6	0.80	0.40	0.20
14”	9200	4.1	2.0	1.02	0.51	0.26
15”	10800	4.8	2.4	1.20	0.60	0.30

In selecting a digital recording system with enough capacity to store mission data, you will need to know the required record time and the composite bit rate of the input stream. The composite bit rate is the aggregate bit rate of the data streams to be recorded plus any overhead bits the system adds during the formatting process. Overhead bits are any bits other than user information bits. The amount of overhead bits will depend on the type of encoder/multiplexing

format being used and is information that should be available from the vendors you are considering. Typical overhead percentages for IRIG acceptable formats are as follows:

a. **ADARIO**: Approximately 3%;

b. **ARMOR**: 2% for PCM, 0% for analog;

c. **IRIG-106, Chapter 10**: Data-type-dependent and packet-size-dependent.

With required record time and the composite bit rate known, you can calculate the amount of storage media you will need. The following example shows how to calculate the storage capacity needed for typical airborne data system for a 3-hour flight.

1 PCM stream at	2.5 Mbps
1 PCM stream at	4.0 Mbps
4 MIL-STD-1553B buses at	4.0 Mbps
3 MPEG video streams at 4.0 Mbps each	12.0 Mbps
Overhead bits of approx 11% (rounded up)	2.5 Mbps
Composite bit rate to record	25.0 Mbps

Using storage capacity = composite bit rate multiplied by the required time yields:

- Storage capacity = (2.5×10^7 bps)*(3.0 hours)*(60 minutes/hour)*(60 seconds/minute)
- Storage capacity = (2.5×10^7 bps)*(1.08×10^4 seconds)
- Storage capacity = 2.7×10^{11} bits
- Since 8 bits = 1 byte
- Storage capacity = (2.7×10^{11} bits)/(8 bits)
- Storage capacity = 3.375×10^{10} bytes
- Since 1 GB = 1×10^9 bytes
- Storage capacity = (3.375×10^{10} bytes)*(1 GB /1×10^9 bytes)
- Storage capacity = 33.75 GB

The above calculation can be simplified by using the constant of 0.45 GB needed to store 1 Mbps for 1 hour. To calculate the same system above you could use the formula:

$$\boxed{\text{Required storage capacity in GB} = C \times B \times T} \qquad \text{Eqn. 9-1}$$

where C=0.45 GB;
B=Composite bit rate in Mbps;
T=time in hours.

Therefore, storage capacity in GB = (0.45)*(25)*(3) = 33.75 GB

Presented in Table 9-3 is a comparison of a few systems on the market today. The list provides the minimum record time in hours based on the advertised storage capacity and the maximum data rates. There are many other systems and vendor combinations available to meet your requirements, Table 9-3 is just a sampling of currently available technologies.

Table 9-3. Record Times of Various Equipment

Vendor	Model	Storage Media	Storage Capacity (GB)	Aggregate bit rate in Mbps	Record Time in Hours
Ampex	DCRsi-240	Magnetic tape cassette	45	240	0.46
Ampex	DDRs 400	Hard-disk module	320	400	1.78
AMPOL	MARS104-II	ATA flash module	2.5	10*	0.56
AMPOL	MARS104-II	Solid-state disk	34	20*	3.78
CALCULEX	Model 2300	Flash cache cartridge	34.3	20	3.81
CALCULEX	Model 6101	Solid-state cartridge	137.3	1024	0.30
CALCULEX	Model 7101	Solid-state cartridge	546.6	2048	0.59
ENERTEC	VS2200	Hard-disk module	37	30	2.74
ENERTEC	DS2100	Hard-disk module	30	30	2.22
ENERTEC	DS2100	Solid-state module	9	10	2.00
ENERTEC	DS4100	Hard-disk module	144	240	1.33
General Dynamics	SAM Model 730	RAID disk array	730	400	4.06
HIEM DATA SYSTEMS	D20f	AIT2 mag tape cart	50	200	0.56
HIEM DATA SYSTEMS	D5000 Series	AIT3 mag tape cart	100	80	2.78
HIEM DATA SYSTEMS	D5000 Series	Hard-disk module	144	240	1.33
HIEM DATA SYSTEMS	D5000 Series	Solid-state cartridge	74	100	1.64
L-3 Com S/TAR	S/TAR RM3000	Solid-state cartridge	32	50	1.42
MERLIN	ME-1000	PCMCIA solid-state	4.5	20	0.50
MERLIN and V-80AB-F	ME-981	Hi 8mm magnetic tape	2	2.2	2.02
SYPRIS Data Systems	MARS-II-SSM	Solid-state cartridge	60	40	3.33
SYPRIS Data Systems	MARS-II	Magnetic tape cassette	20	12	3.70
SYPRIS Data Systems	MARS-IIe	Magnetic tape cassette	35	40	1.94
TTC	MMSM-100	PCMCIA solid-state	4	5	1.78

TTC	SMS-20XX	Solid-state cartridge	30	20	3.33
TTC	SMS-3000	Solid-state cartridge	128	240	1.19
* estimated					

9.6 Conclusion

The intent of this section was to provide some general information about recorders and to introduce you to questions that need to be asked and answered before selecting a recording system. Some questions that will need to be answered are as follows.

a. What are the data requirements?

b. How long do I need to record?

c. What is the recording format and media?

d. Will the hardware fit and operate in the environment available?

e. What are the data post-fight analysis and archiving plans?

f. What are the security issues with this recording media?

The answers to the above questions will change over time as will the systems available to fulfill your test requirement.

The recording and recorder systems are continuously changing to meet ever increasing quantities of data generated by high-performance test platforms and the need to process these data at even higher bit rates will be required. With the solid-state devices becoming the storage media of choice, these changes are coming even faster. In selecting a recording system the instrumentation engineer will be faced with an array of possible solutions, each with its advantages, disadvantages, cost, and technical risk.

CHAPTER 10

Practical Considerations

10.1 Introduction

As with any system design, knowing the common pitfalls to avoid helps the designer and the customer as well. This chapter is intended to be a source of items to consider when putting together an instrumentation system.

10.2 Piezoelectric Transducers

This paragraph describes various topics related to PE transducers, such as the manufacturing process, signal conditioning, the PE selection, and the installation processes.

10.2.1 Composition

Manufacturing of PE accelerometers is a precise and complex process. First, the raw ceramic materials are ground into a powder, then mixed in the needed proportions. Next, pellets are created by putting the powder in a pressing machine. The pellets are placed in a furnace and heated to turn them into strong ceramic elements. The elements are then machined to the dimensions required. Next, the elements have electrical contacts deposited on their faces. Finally, the elements are assembled into the transducer housing and tested.

In general, PE accelerometers are constructed in the following manner (Figure 10-1). Each unit has a base with provision for mounting to the structure under test. Normally this is with a post or stud projecting upward. The PE element attaches to the stud and a small mass attaches to the PE element. The case covers the internal parts and is welded to the base, sealing the unit. Finally, there is an electrical connector, usually a microdot type, for connecting the signal cable. A variation on this configuration is to put more than one accelerometer in a case. Two accelerometers form a biaxial unit, and three form a triaxial unit. In the triaxial unit, the accelerometers are mounted at right angles to each other, allowing a single unit to sense vibration in the X, Y, and Z axes.

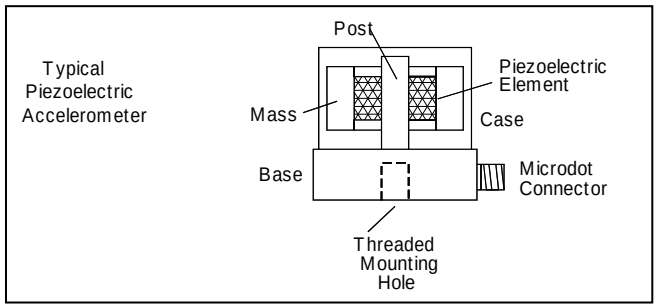

Figure 10-1. Typical Piezoelectric Accelerometer

Two other important variations of the PE accelerometer are the high-temperature accelerometer and the integrated electronics accelerometer. High-temperature accelerometers are generally similar to standard PE accelerometers, but the materials and construction techniques are changed to ones that can tolerate much higher temperatures, up to 1400°F for some models. Integrated electronics piezoelectric (IEPE) accelerometers are the same as

standard PE accelerometers except they have an integrated circuit style amplifier added. Adding this amplifier gives the accelerometer a low-impedance, high-level output. The advantage of this is that ordinary hook-up wire can be used instead of low-noise coaxial cable. The disadvantages are that the accelerometer costs more and it can't be used at higher temperatures.

10.2.2 Signal conditioning

One of the advantages of PE accelerometers is that they are self-generating, that is, the motions they are subjected to cause them to generate an output signal. The disadvantage being the output has very low electrical energy. Additionally, PE accelerometers have very high output impedance (mainly capacitive). Therefore, PE accelerometers have special requirements for their signal conditioning. Using an ordinary high-input-impedance voltage amplifier tends to not give very good results. The reason for this is that the capacitance of the accelerometer, the capacitance of the cable, and the input resistance of the signal conditioning amplifier combine to form an RC network with a short time constant. This acts in the same manner as a high-pass filter, blocking the signal below 10 Hz. Even worse, any contamination of the cable or connections with moisture or oil has the same effect as reducing the amplifier input resistance, further degrading the low frequency response. Yet another difficulty is that if the cable length is changed, the total capacitance is also changed, which causes the circuit response to change yet again. The result is that the accelerometer, cable, and amplifier must all be calibrated together, and recalibrated if anything is changed.

A better approach to signal condition PE accelerometers is to use a charge amplifier. A diagram of a PE accelerometer equivalent circuit can be seen in Figure 10-2. In a charge amplifier, frequency response can go as low as 0.5 Hz, although most are designed to roll off at about 5 Hz. Cable length, capacitance, and small amounts of contamination have much less effect on low frequency response. A charge amplifier (see Signal Conditioning section) consists of a charge converter circuit, which converts the accelerometer's charge signal to a voltage, and a voltage amplifier to raise the result to a high level (about +/- 2.5 or 0 to 5 VDC). The charge converter circuit is an operational amplifier using a feedback capacitor to provide integrating feedback. By using capacitor feedback, the charge gain of the amplifier is made solely dependent on the value of the capacitor. This greatly reduces the effect of cable and transducer capacitance and makes calibrating the charge amplifier, cable, and accelerometer together unnecessary.

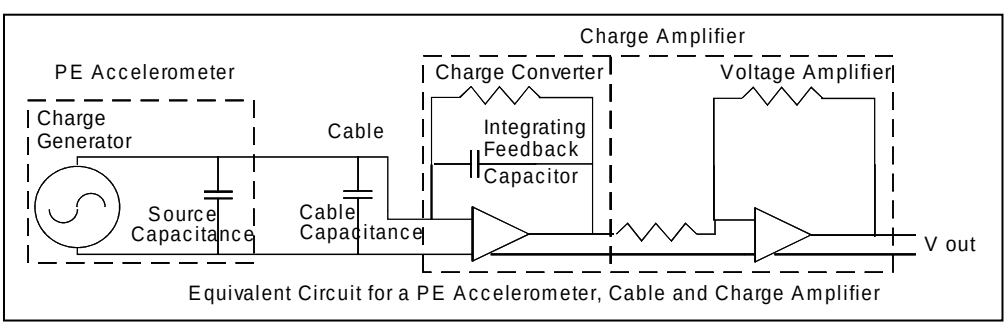

Figure 10-2. Piezoelectric Accelerometer Equivalent Circuit

Signal conditioning for IEPE accelerometers is done quite differently. Because this type of accelerometer contains a built-in amplifier, it requires an external power source. Usually the external excitation is a constant current power supply. A common arrangement is for the

excitation and signal to share a single coaxial cable. The excitation supply contains a blocking capacitor that filters out the DC excitation but passes the AC signal on to the data acquisition system. The constant current can be provided by a voltage supply through a constant current diode.

10.2.3 Selection

In order to make use of any transducer it is necessary to determine the electrical output versus the mechanical input it experiences. The process of determining this is called calibration. Calibrations are performed to determine the sensitivity and frequency response of a unit, and to ensure it is operating properly, and has not sustained any internal damage from previous use. Refer to the Calibration section for more information.

Before an accelerometer can be calibrated, an accelerometer suitable to the job at hand must be selected. Several considerations must be taken into account when making this choice:

a. **Sensitivity**: How many picocoulombs/g? If the g levels are expected to be low then high sensitivity is needed, and vice-versa.

b. **Frequency response**: The accelerometer must have a frequency response that covers the desired range of frequency .

c. **Temperature range**: The temperature where the accelerometer will be installed should be known.

d. **Weight**: If the measurements are to be made on a particularly small or light structure, the unit selected must also be small and light so as not to change the response of the structure.

10.2.4 Mounting

Once the accelerometer has been chosen and calibrated, it can be installed on the structure to be tested. There are several methods for mounting an accelerometer. Sometimes for a quick test, only a temporary mounting is needed. In this event, the accelerometer might be attached using double-sided tape, a magnetic mount, or some other simple attaching method. While quick and convenient, these methods may not be valid at high amplitude vibrations and they degrade the response at high frequencies.

The more desirable method is to make mounting brackets or blocks that attach to the accelerometer with screws and are themselves screwed to the structure under test. This type of mount is the most durable, safest (least likely to fall off) and causes the smallest distortions in the signal from the accelerometer; however, great care should be taken in the design of the mounting brackets. The best sort of bracket would be rigid, lightweight, and the mating surfaces smooth so that the base of the accelerometer sits completely flush to the structure under test. Particular attention must be paid to the bracket's weight, since if the structure is itself very light, the vibration measured can be greatly affected.

Sometimes the spot on the structure where the accelerometer is to be mounted has no fasteners for a bracket to be secured. In this case, the bracket can be made with a flat bottom with grooves cut in it, then epoxy is used to attach it to the surface. If this is done, the bracket should also be tethered to the structure with a steel cable. This way if the epoxy doesn't hold, the bracket and accelerometer will not fall into any nearby mechanisms.

Regardless of the final form of the mounting bracket, the accelerometer will be secured to it by screws or a stud of some type. The data sheet for the accelerometer should be consulted to determine the proper hardware to be used with that model. The data sheet will also specify the torque to be applied to the fastener. Using a torque wrench to tighten the fastener to the correct torque is an important step because applying too much torque can distort the accelerometer's case causing an error in the output signal. The recommended torques are generally not very high, thus making it easy to incorrectly torque the fastener.

10.2.5 Cabling

Another important aspect of the installation process is the cable used to connect the accelerometer to the charge amplifier. Electrical wiring is often not given a lot of attention because wire seems like such a simple thing, but when working with PE accelerometers, the cable must be dealt with as carefully as any other item. The reason for this goes back to the details of how a PE accelerometer works. Since a PE accelerometer outputs such a low signal level, it is vulnerable to picking up noise from any nearby electrical equipment. Further, the cable itself can generate noise internally. Because of the low signal output, a coaxial-type cable is normally used. When the cable is subjected to vibration, small areas between the shield and the dielectric can separate, producing an electric charge. This is called the triboelectric effect, and it degrades the output signal with added noise. To cope with these problems, special low-noise coaxial cable has been developed for use with PE accelerometers. It is sometimes referred to as Microdot cable. This type of cable has a conductive coating applied to the surface of the dielectric. This prevents build-ups of charge at any shield separations. Noise due to the triboelectric effect is greatly reduced.

Besides the noise treatment, this type of cable is built thin, flexible, and light so as not to affect the behavior of lightweight structures. Unfortunately, by being made so small and light this cable and its connectors are relatively fragile, and must be handled with great care to avoid failures. It must not be tugged on, squeezed, kinked, etc. When installed on the test structure it must be well supported to avoid excessive flexing. The end of the cable should be tied down 2 to 3" from the accelerometer, but with a slight loop to provide strain relief to the connector. The PE transducer cabling may be the most overlooked and least understood potential problem when utilizing PE transducers in an instrumentation system.

In conclusion, when vibration measurements are necessary, the PE accelerometer and the IEPE accelerometer represent highly developed technology that is readily available. There are many manufacturers, with a wide variety of models to fill virtually every combination of requirements; however, the user has to remain aware that the technology has certain limitations, and any particular model of accelerometer has its limits. The user has to take care to determine the conditions that the accelerometer will be used in, and to review the specification sheets so that the right model is chosen. The user also needs to be careful to follow good installation practices as they can have a large effect on performance. If these needs are met, the PE accelerometer can be depended on to provide good, usable data.

When installing PE transducers, some environmental considerations must be taken into account. The internal components of the transducer and the external electrical connector maintain a very high (typically $>10^{12}\ \Omega$) insulation resistance so that the electrostatic charge generated by the crystals does not "leak away". Consequently, any connectors, cables, or amplifiers used must also have a very high insulation resistance to maintain signal integrity. Environmental contaminants, such as moisture, dirt, oil, or grease, can all contribute to reduced

insulation, resulting in signal drift and inconsistent results. The use of special, “low noise” cable is recommended with charge mode transducers. Standard, two-wire, or coaxial cable when flexed generates an electrostatic charge between the conductors. This is referred to as “triboelectric noise” and cannot be distinguished from the sensor’s crystal electrostatic output. “Low noise” cables have a special graphite lubricant , which minimizes the triboelectric effect.

10.3 Baud Rate and Bits per Second

When referring to modem transmission the terms baud rate and bits per second are sometimes used to describe the speed of the channel. The term baud rate is sometimes used in low speed communication channels (usually a modem). Sometimes bps and baud rate are incorrectly understood to have the same meaning. The root of the problem is the facts that as communication channels have gotten faster and other methods, such as broadband, are now being used, they usually use bps as an indication of the speed of the channel. The fact that the terms "baud" and "bits per second" are used interchangeably and indiscriminately and the fact that they are not necessarily the same cause confusion.

10.3.1 Bits per second

The term bps is a measure of the number of data bits (digital 0s and 1s) transmitted each second in a communications channel. This is sometimes referred to as "bit rate." Individual characters (letters, numbers, etc.), also referred to as bytes, are composed of several bits. While a modem's bit rate is tied to its baud rate, the two are not the same, as explained below.

10.3.2 Baud rate

Baud rate is a measure of the number of times each second a signal in a communications channel varies, or makes a transition between states (states being frequencies, voltage levels, or phase angles). One baud is one such change. Thus, a 300-baud modem's signal changes state 300 times each second, while a 600-baud modem's signal changes state 600 times each second. This does not necessarily mean that a 300-baud and a 600-baud modem transmit 300 and 600 bps.

10.3.3 Determining bits per second

Depending on the modulation technique used, a modem can transmit one bit, more than one bit, or less than one bit with each baud. To put it another way, one change of state can transmit one bit or more or less than one bit. As mentioned earlier, the number of bits a modem transmits per second is directly related to the number of bauds that occur each second, but the numbers are not necessarily the same. To illustrate this, first consider a modem with a baud rate of 300, using a transmission technique called FSK (frequency shift keying) in which four different frequencies are turned on and off to represent digital 0 and 1 signals from both modems. When FSK is used, each baud transmits one bit; only one change in state is required to send a bit. Thus, the modem's bps rate is also 300: 300 bauds per second X 1 bit per baud = 300 bps. Similarly, if a modem operating at 1200 baud were to use one change in state to send each bit, that modem's bps rate would be 1200. Now, consider a hypothetical 300-baud modem using a modulation technique that requires two changes in state to send one bit, which can also be viewed as 1/2 bit per baud. Such a modem's bps rate would be 150 bps: 300 bauds per second X 1/2 baud per bit = 150 bps. To look at it another way, bps can also be obtained by dividing the modem's baud rate by the number of changes in state, or bauds, required to send one bit:

$$\frac{300\ baud}{2\ bauds/bit} = 150\ bps$$

Eqn. 10-1

In the modem industry, medium- and high-speed modems use baud rates that are lower than their bps rates. Along with this, they use multiple-state modulation to send more than one bit per baud. For example, 1200-bps modems that conform to the Bell 212A standard (which includes most 1200-bps modems used in the US) operate at 300 baud and use a modulation technique called phase modulation that transmits four bits per baud. Such modems are capable of 1200 bps operation, but not 2400 bps because they are not 1200-baud modems; they use a baud rate of 300. Therefore,

$$300\ baud \bullet 4\ bits/baud = 1200\ bps$$

Eqn. 10-2

or

$$\frac{300\ baud}{1/4\ baud/bit} = 1200\ bps$$

Eqn. 10-3

Similarly, 2400-bps modems that conform to the International Telecommunications Union V.22 recommendation[20] actually use a baud rate of 600 when they operate at 2400 bps; however, they also use a modulation technique that transmits four bits per baud:

$$600\ baud \bullet 4\ bits/baud = 2400\ bps$$

Eqn. 10-4

or

$$\frac{600\ baud}{1/4\ baud/bit} = 2400\ bps$$

Eqn. 10-5

Thus, a 1200-bps modem is not a 1200-baud modem, nor is a 2400-bps modem a 2400-baud modem.

Now let's look at 9600-bps modems. Most of these operate at 2400 baud, but (again) use a modulation technique that yields four bits per baud. Thus:

$$2400\ baud \bullet 4\ bits/baud = 9600\ bps$$

Eqn. 10-6

or

[20] International Telecommunications Union. "1200 Bits per Second Duplex Modem." V.22. May be superseded by update. Available at http://www.itu.int/rec/T-REC-V.22/en.

$$\frac{2400\,baud}{1/4\,baud/bit} = 9600\,bps \qquad \text{Eqn. 10-7}$$

10.4 Timing Issues and the Instrumentation System

Timing issues arise frequently in instrumentation design and operation. Questions regarding the accuracy of the clock, the resolution of the timing, and the accuracy of data correlation frequently confront the instrumentation engineer. When discussing timing, it is best to confine the discussion to a few basic issues before moving to the larger issues of data correlation.

10.4.1 IRIG-B

Whenever timing is discussed in the instrumentation community, it normally centers on IRIG-B. The IRIG-B standard is a world-wide standard for distributing time. The IRIG wrote the standard and the B stands for the B format. There are several other formats available but the most common is B format with some vendors also using format G. For the most part, instrumentation systems today use IRIG-B. The IRIG-B pulse code contains one frame of 100 elements per second for the time of the year and optional control or status bits (for example GPS receiver status). The three types of elements are BNR 0, BNR 1, and position marker P (as seen in Figure 10-3).

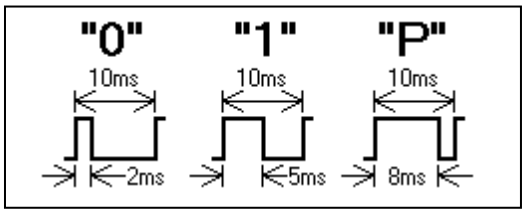

Figure 10-3. IRIG Bit Encoding

A frame is described as:

frame length equals 1 second
element length equals 10 ms

Each frame starts with two consecutive position markers, used as a frame reference marker (R). Furthermore, a frame is divided into 10 sets of 10 elements each. Each set contains 2 BCD-coded numbers (4-bit decimal), separated from each other by a 0 and terminated by a position marker as the 10th element. The sets contain the time of year and status bits in the following order:

seconds (0...59),
minutes (0...59),
hours (0...23),
days (0...99),
days*100 (0...3).
status word:

A typical frame looks like the one in Figure 10-4. The IRIG B format uses a 100-pulse-per-second format, which is a 1-ms resolution, and a 1-kHz-modulated wave. For specifications on the other formats, see RCC Document 200-04, "IRIG Serial Time Code Formats."

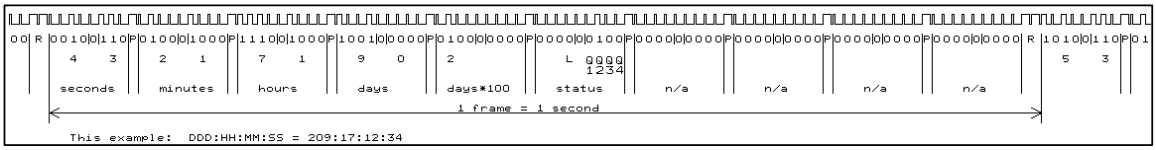

Figure 10-4. IRIG-B Frame Format

10.4.2 Global Positioning System and IRIG-B

It is common to have a GPS receiver on test vehicles and to use the GPS to synchronize the GPS time to the IRIG-B time. Synchronizing is done to reference the IRIG-B to a standard (GPS time) so that the timing on the instrumentation is known on the ground during flight and in post-flight analysis. It is important to note that GPS time is normally not used to correlate the relative time between test vehicles. The GPS referenced IRIG B to use as a stand-alone time reference and is updated at the rate of the GPS receiver. The GPS receiver timing is not currently used for timing because the accuracy and resolution are not high enough for data acquisition.

10.5 Pitot-Static Installation Considerations

Pitot-static systems (see Signal Sources, Chapter 3) require precise installation techniques in order to assure measurement accuracy. What follows is a quick description of current installation practices.

Typical Pitot and static installations are depicted in Figure 10-5, Figure 10-6, and Figure 10-7. Probes are installed in the fluid stream with the impact hole facing upstream, the head parallel to the flow direction, and the stem perpendicular. Types PA and PB are well suited to mounting on thin-walled ducts where the probe is to be inserted from the outside. Types PC and PD are designed with removable pressure take-offs. This allows for installation from within the duct where it is not practical to make an insertion hole diameter equal to the length of the probe tip. Figure 10-8 shows a diagram of a thin wall installation and Figure 10-9 shows a diagram of a thick wall installation. Figure 10-10 shows a correlation between probe diameter and minimum wall insertion dimensions for a probe with fixed take-offs.

Figure 10-5. Typical Pitot Tube Installation, Underside Fuselage Without Integral Static Port

Figure 10-6. Typical Pitot Tube Installation, Underside Wing Without Integral Static Port

Figure 10-7. Standard Static Port Installation on Side of Fuselage

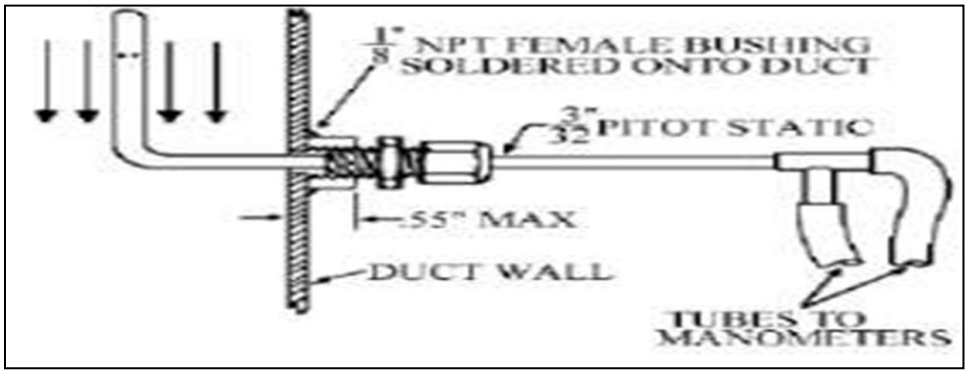

Figure 10-8. Thin Wall Installation

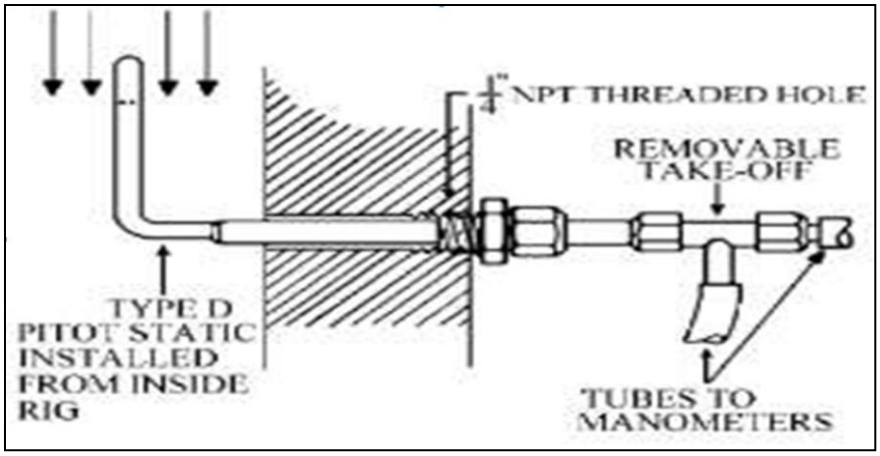

Figure 10-9. Thick Wall Installation

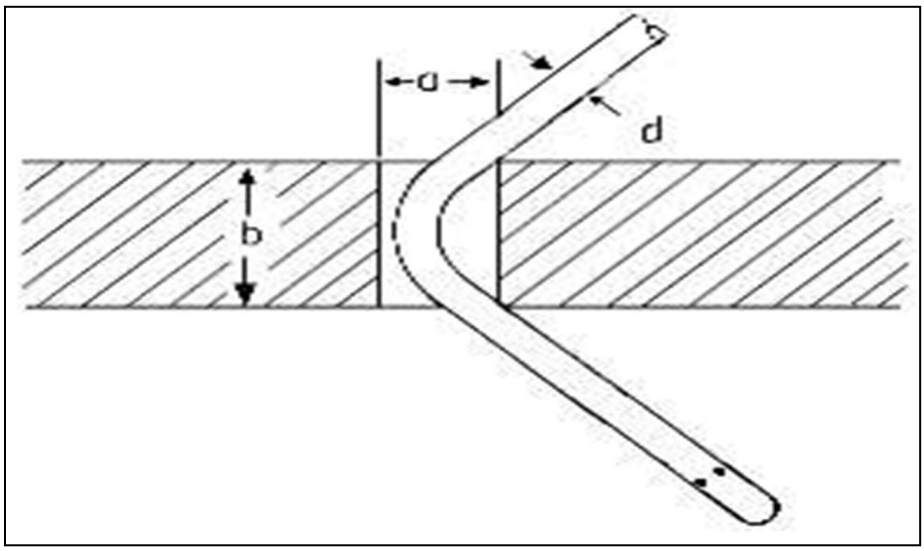

Figure 10-10. Limiting Lengths and Diameters

10.6 Connection to the Military Standard 1553 Bus

The connection into the MIL-STD-1553 bus is detailed in the standard itself. This section is meant to supplement what is in the standard.

10.6.1 Existing buses

In some test vehicles, spare production stubs are sometimes located along the bus run in the vehicle. For this scenario use the following procedure.

a. If your instrumentation system is located less than 20 ft away, simply connect your 1553 bus cables from the stub to the instrumentation system bus monitor.

b. If your instrumentation system is longer than 20 ft away, find the end of the bus, extend the production bus nearer to the instrumentation system, and provide a stub from there.

Sometimes the only way to pick-up the 1553 bus is to tap off a production connector. For this scenario, use the following procedure.

a. Remove the production connector and insert a jumper cable that passes the production 1553 bus signals, and taps off the 1553 bus signals to be sent to the instrumentation system bus monitor.

b. If your instrumentation system is located <20 ft but >1 ft from the pick-up point, simply connect the 1553 bus signals from the jumper cable to an instrumentation bus coupler and run the output of the bus coupler to instrumentation system bus monitor.

c. If your instrumentation system is located < 1 ft from the pick-up point, simply connect the 1553 bus signals from the jumper cable directly to the instrumentation system bus monitor.

10.6.2 1553 bus couplers

1553A and 1553B bus couplers can be purchased as a COTS item or custom built using Table 10-1.

Table 10-1. Bus Coupler Information

Parameter	1553A Spec	1553B Spec
Cable Characteristic Impedance (Zo)	70 Ω	70 – 85 Ω
Fault Isolation Resistors	0.75 Zo, Typically use 54 Ω	0.75 Zo Typically use 59 Ω
Transformer Turns Ratio	1:1	1:1.41

10.6.3 1553 cable information

The 1553 cable information for bus wiring is in Table 10-2.

Table 10-2. Bus Wire Information

Parameter	1553A Spec	1553B Spec
Part Number	STM5M1212-002	M17/176-00002
Federal Stock Number	6145-01-209-7452	6145-232-7484
Characteristic Impedance (Zo)	68 Ω	78 Ω
Outer Jacket Color	Blue	Blue
Conductor Wire Colors	Orange, Blue	Blue, White

10.6.4 Typical design questions

Questions and information regarding hardware and physical connections and programming are outlined below.

a. Hardware/physical connections:

(1) On what bus is the data of interest located?

(2) How many 1553 buses will be utilized?

(3) What type of 1553 bus (1553A or 1553B) is the test platform using?

(4) Is the bus dual redundant? Most 1553 buses used today are dual redundant, but some older platforms have 1553 buses that are not.

(5) Where is the 1553 data physically accessible (connector, stub etc.) on the aircraft?

(6) What is the instrumentation bus monitor unit, mounting, and location information?

(7) How long of a 1553 cable run will be required?

(8) Use direct coupling or transformer coupling? (Refer to physical connection to the 1553 bus at the top of this document.)

b. Programming information needed:

(1) Parameter name?

(2) Sample rate?

(3) Remote terminal #?

(4) Parameter source (data computer, mission computer, etc.). The source can prove to be very important for the engineers interpreting data. Some parameters have the same name but they are different depending on the source (RT).

(5) Subaddress # (Also known as message)?

(6) Is the command word a transmit or receive command?

(7) Word count: How many data words in the subaddress?

(8) Word #?

(9) MSB value – The engineering unit's value of the MSB. For example: angle of attack, MSB = 180°.

(10) Bit breakout for discrete words. For example: the parameter weight off wheels is true when bit # 5 = 1.

(11) Where do I get specific 1553 information for my test platform? For example, the RT ICD; a listing of the 1553 parameters used on the GPS will be in I/O section of the GPS ICD.

Note: The Operational Flight Program and Aircraft Operational Program are the preferred sources of parameter information because they take the entire 1553 system of the aircraft into account and are updated regularly. Obtaining a current version of each RT's ICD can prove to be very difficult.

(12) What data is required to be telemetered?

(13) What data is required to be recorded?

(14) Should I record and telemeter all the 1553 traffic on the bus or only the parameters of interest? The answer to this question will result in evaluating trade-offs that make the most sense for your particular application. Refer to IRIG Standard 106, Chapter 4 and Chapter 8 to examine choices for PCM setup.

The following should be considered when making the above choice:

i. type and capability of instrumentation bus monitor available for use;

ii. capacity of storage (recording) device;

iii. bandwidth of TM system;

iv. ground station playback capabilities.

c. Typical test equipment:

(1) Computer (load program of selected parameters into bus monitor)?

(2) 1553 simulation source (PASS 1000, PC, SBA, etc.) (For lab test or aircraft troubleshooting)?

(3) 1553 couplers and associated cabling?

(4) Instrumentation 1553 bus monitor system?

(5) Equipment to verify bus monitor is receiving data (Varies depending on 1553 application). Examples: bit synchronizer and decommutator, logic analyzer, Pass 1000, serial bus analyzer, etc.

d. Verifying system operation:

(1) Ensure all physical connections between the aircraft 1553 bus and the instrumentation system are properly connected.

(2) Determine what production equipment in the aircraft must be energized or activated to exercise data on the parameter of interest.

(3) Once you appear to be getting data on the 1553 bus, pick a parameter that has a known value for a sanity check. Example: The heading indicator in the cockpit should match the converted 16-bit data from the parameter of interest on the instrumentation system.

(4) Verify that 1553 data is updating for all parameters of interest.

10.7 Recorders and Recording

As part of the recording system selection process, there are several issues to be considered, including installation, cost, security, and archiving.

10.7.1 Installation considerations

Installation issues need to be considered. They include such things as space, location, accessibility, axis orientation, environment, and power and control options.

The area to install a recording system that would give you the broadest of choices would be a location that has a cockpit environment. Since few test aircraft will have that space available, the alternative is to find a location that will provide desirable characteristics for recorders under consideration.

The area should be easy to access to facilitate loading/downloading of storage media and access to the electrical connectors for testing or troubleshooting. Keep in mind, some units require clearance to open a door for the media module. Locate the recording system close to the data sources and power requirements when possible but not near EMI generators. Is cooling air available and can the location accommodate axis-sensitive mechanical systems?

The environmental specifications of the recorder should equal or better the environment of the installation location. If they do not, the equipment shortcomings might be accommodated by adding cooling air, shock isolators, EMI shielding, or pressurizing an area. These concessions made for equipment specifications can add significant cost to the installation.

Most systems will operate on +28 VDC power, but check the revision of MIL-STD-704[21] called out in the recorder specification sheet. A power filter or some other power concession may be needed, which will add to the overall installation cost. Heater power and battery back-up are other options that may need to be considered as part of the installation. Vendor specifications should provide the information you will need for these considerations but be careful when taking these specifications at face value.

The control and status of the recording system are other installation issues that you will need to consider. Control and recorder status information are generally provided by one or a combination of these three standard interfaces: RS232, RS422, or discrete signals. Vendors who claim compliance with the standards should provide an ICD defining the specific subset that they are using. Recorder commands and control mnemonics are detailed in Chapter 6, Section 18 and Chapter 10, Section 10.7 of IRIG Standard 106.

10.7.2 Cost

Cost associated with the airborne recorder purchase price, installation costs, media cost, training, spares, and maintenance are items the instrumentation engineer will be directly concerned with but also must consider the cost associated with the playback equipment and software required by the user. The instrumentation engineer with the attitude “I got it on the tape, now you get it off “ will not make any friends with the flight line maintainers, and this is not a cost-effective way of doing business.

The data handling from capture to archive all starts with the recording format and the type of recording media used. Is the recording format an IRIG standard or a vendor-proprietary encoding and multiplexing format that will need unique equipment or software to reduce data?

Determining the total cost of the recording system will require a coordinated effort by the test team to consider test duration, data requirements, the need for future requirements, and how data products are to be delivered, processed, and archived. Deciding on a recording system that best fits the overall requirement is the right selection.

10.7.3 Security

Security issues surrounding recording media should be considered as part of your selection process when classified data will be recorded. Marking, packaging, handling, transporting, storing, and declassification are some of the procedures that will need to be considered by the site security office to determine proper handling of a specific program

[21] Department of Defense. Aircraft Electric Power Characteristics. MIL-STD-704F. 12 March 2004. May be superseded by update. Available at http://quicksearch.dla.mil/basic_profile.cfm?ident_number=35901&method=basic

classification. Declassification of each recording media and what needs to be done to comply with regulations is the focus of this section.

It should be noted here that declassification of storage media is an administrative procedure resulting in a determination that classified information formerly stored on a magnetic media has been removed or overwritten sufficiently to permit reuse in an unclassified environment. Processes of clearing, sanitizing (also known as purging), and destroying are acceptable methods used to prepare storage media for declassifying.

When checking the vendor specification sheets you should be aware of the differences between clearing and sanitizing. Clearing is the process of erasing the data on the media so that it may be reused in the same protected environment that the data was created in before clearing. Clearing can be accomplished by overwriting or degaussing. Sanitizing or purging is the process of removing the data on the media before the media is reused outside the environment that does not provide an acceptable level of protection for the data that was on the media before sanitizing. Laboratory techniques cannot retrieve data that has been sanitized/purged. Sanitizing may be accomplished by degaussing and in some cases overwriting.

Destroying is the process of physically damaging the media to the level that the media is not usable as media, and so that there is no known method of retrieving the data. Degaussing is a procedure that reduces the magnetic flux on media virtually to zero by applying an AC magnetizing field. Degaussing is more effective than overwriting magnetic media. Overwriting is a software process that replaces the data previously stored on the storage media with a predetermined set of meaningless data.

Approved methods of clearing and sanitizing media are shown in the US Department of Defense Clearing and Sanitization Matrix[22].

Magnetic tape can be degaussed to an acceptable level for reuse or declassifying with the proper security level of degaussing equipment. Equipment costs are sometimes expensive, but the same unit can be used for a variety of magnetic tape products and the procedure is quick and easy to perform. Degaussed tapes can be used repeatedly but generally are not recommended for new flight tapes.

Mechanical disk hard drive declassification can be accomplished through degaussing, overwriting, or destroying. Degaussing the rugged-disk hard drives may be difficult due to the sealed casing, and degaussing may damage the read/write heads in the process. Overwriting the disk to clear it for reuse on another flight would be the normal way of doing business. If the recording system selected uses a mechanical disk hard drive in a classified environment, declassifying it will most likely require destroying it in the end.

Solid-state memory devices and solid-state disk hard drives can be cleaned or sanitized to an acceptable level with extensive approved overwriting procedures. The overwrite procedure as described in IRIG Standard 106 Chapter 10.8 will provide an acceptable level of erasure for reuse and declassification of the memory module. This procedure will also provide a quick turnaround to use the memory modules on subsequent flights.

---

[22] Department of Defense. *Clearing and Sanitization Matrix* in Industrial Security Letter 2007-01. 11 October, 2007. May be superseded by update. Available at http://www.dss.mil/documents/pressroom/isl_2007_01_oct_11_2007_final_agreement.pdf.

Other secure software programs are offered by various vendors, and they will be acceptable as long as they comply with National Industrial Security Program Operating Manual[23], NSA 130-2[24], Air Force System Security Instruction 8580[25], Army 25-2[26], or Navy IA Publication 5239-26[27] requirements and site security office.

10.7.4 Archiving

The relationship of the recording format to that used for data archiving, retrieval, and storage needs to be considered in data recorder selection. When magnetic tape is used as the original flight tape archiving does not require any additional steps other than storing it in an environmentally safe place. When disk hard drives or solid-state memory media are being used to capture and store data, a transfer from this temporary media to a permanent archiving tape or other media is required. Archiving to tape is still one of the most economical options available and has improved with the high-capacity digital recording systems.

The digital recording formats such as called out in IRIG-106, Chapter 10 and the random access may make archiving to other media more attractive. As the cost of disk storage decreases, RAID and JBOD archiving systems will become more cost-effective and will be more cost-competitive with the tape archiving systems.

How the data will be archived is a very important consideration when selecting a recorder, recorder media, and recorder format. Significant costs can be avoided downstream if the instrumentation engineer does some pre-planning and coordination with the data processing organization to ensure the existing recording system will accommodate future storage and retrieval requirements.

---

[23] Department of Defense. National Industrial Security Program Operating Manual. DoD 5220.22-M. 28 February, 2006. May be superseded by update. Available at http://www.dss.mil/documents/odaa/nispom2006-5220.pdf.

[24] National Security Agency. NSA/CSS Storage Device Declassification Manual. NSA/CSSM 9-12. May be superseded by update. Available at http://www.nsa.gov/ia/_files/Government/MDG/NSA_CSS_Storage_Device_Declassification_Manual.pdf.

[25] Secretary of the Air Force. Remanence Security. AFSSI 8580. 17 November 2008. May be superseded by update. Available at http://www.altus.af.mil/shared/media/document/AFD-111108-041.pdf.

[26] Department of the Army. Information Assurance. AR 25-2. Rapid Action Revision issued 23 March 2009. May be superseded by update. Available at http://www.apd.army.mil/pdffiles/r25_2.pdf.

[27] Department of the Navy. Remanence Security Guidebook. IA Pub 5239-26. May be superseded by update. Available to Navy personnel at https://infosec.navy.mil/pub/docs/documents/navyn/ia/don_ia_p-5239-26.pdf.

CHAPTER 11

Grounding, Shielding, and Noise Reduction

11.1 Background

Many engineers and technicians have spent countless frustrating hours troubleshooting noise or interference problems on signal lines. These problems can be caused by incorrect grounding or shielding, or they can be caused due to the absence of grounding and shielding. Troubleshooting is seen sometimes as an art, sometimes as "black magic," or sometimes even as a waste of time. Often, troubleshooting techniques are learned on-the-job rather than in a formal electronics curriculum. This is unfortunate because cost savings and avoidances can be generated when proper grounding and shielding techniques are implemented early in the design of a system. Systems designed with good grounding and shielding are not only robust in the sense of being noise- and interference-free, the systems themselves are not radiators of such emissions. In the case of instrumentation systems, this is paramount, since the instrumentation system should never adversely affect the item under test. Conversely, the test item should never adversely affect the instrumentation signals. Proper grounding and shielding techniques will greatly help to make these goals achievable.

Electromagnetic interference (EMI) is a basic term that an engineer should be familiar with along with EMC, defined earlier in this document. The EMI is what we are trying to avoid picking up on our instrumentation signal lines. We are trying to make our systems less susceptible to interference, and EMI can be generated by motors, alternators, radios, integrated circuits, AC power distribution systems, and other sources. When in the lab on a workbench, EMI may not be an issue; however, when setting up an instrumentation system a test item, the EMI environment generally becomes much more hostile. Conversely, if the instrumentation system generates or emits EMI, it may adversely affect how the test item functions. Therefore, it is the instrumentation engineer's job to make the instrumentation system operate in this environment. This is known as EMC, which is the ability of a system to operate in an electromagnetic environment. Historically, as a system goes from design to production, the cost of making the system EMC-compliant increases while the number of available techniques decreases. Therefore, it is very important to apply the guidelines in this document early during the system design and development of instrumentation.

The Federal Communications Commission dictates levels of radiation allowed for different classes of equipment. Additionally, MIL-STD-461F[28] dictates the amount of noise that can be conducted from equipment on power and signal leads. This military standard is often used by industry as a guideline for designing interference-free military and commercial equipment. Depending on the policies of the test sponsor and/or test agency, the instrumentation engineer may have to attain 100% compliance with these standards. In either case, these standards represent tools and guides available to the instrumentation engineer for designing and developing a noise free instrumentation system.

[28] Department of Defense. Requirements for the Control of Electromagnetic Interference Characteristics of Subsystems and Equipment. MIL-STD-461. 10 December 2007. May be superseded by update. Available at http://quicksearch.dla.mil/basic_profile.cfm?ident_number=35789&method=basic.

For the remainder of the chapter, we will assume that the major building blocks of our instrumentation system have been well-designed and are not themselves major emitters of EMI (excluding of course any intentional ones like TM transmitters). Instead, we shall focus on how to make a robust system in a noisy environment such as on a test item. Like the other sections in this handbook, this chapter is not an all encompassing treatise on this subject; rather, it is a guide for the instrumentation engineer and represents best practices researched and lessons learned through experience. For further information on the topics contained herein, see the references in Appendix A.

11.2 Basic Principles of Noise and Noise Reduction Techniques

The noise or interference problem is composed of three basic parts:

a. Noise Source. Probably something on the test item or nearby;

b. Coupling Mechanism. How the noise is "communicated" or picked up;

c. Receiver. Our instrumentation system.

The noise source may or may not currently comply with all required system specifications. This is particularly true if the item is still in the developmental test cycle and has not yet been operationally tested. Assuming the offending source can be uniquely identified, it is doubtful that the instrumentation engineer will be permitted to turn it off or otherwise disable the offender. The offending unit or subsystem may be identified when the test article is placed in an EMI chamber for MIL-STD-461F compliance. Depending on test schedules, the identification may not be made until after the particular test of interest is over. Therefore, the instrumentation engineer must implement proper grounding and shielding techniques to minimize the chances of these noise sources being able to couple with the instrumentation system in the first place.

There is virtually an endless list of possible noise sources on a typical test item. These sources include arcing electrical contacts, RF communication equipment, power supplies, poorly grounded or bonded subsystems, and others. The four basic coupling mechanisms for these noise sources to contaminate our instrumentation system are:

a. Conductive. Implies a direct wire connection between the noise source and the instrumentation system.

b. Magnetic or inductive. Implies near field stored magnetic energy or flux being coupled into our system.

c. Electric or capacitive. Implies near field stored electric energy being coupled into our system.

d. Far field electromagnetic radiation. The terms near field and far field describe the distance from the noise source. The transition from near to far field occurs at a distance from the noise source equal to the noise wavelength (λ) divided by 2π. This boundary should be thought of as transition region where induction coupling in the near field transitions to the far field, where electromagnetic radiation is the coupling type. This boundary is not a discrete "brick wall" where the change occurs immediately (see Figure 11-1).

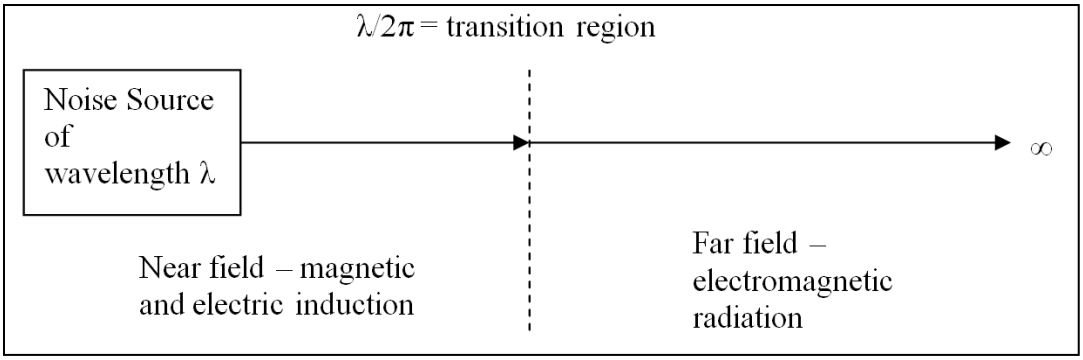

Figure 11-1. Definition of Near Field and Far Field

Conductive coupling requires a wired connection between the noise source and the instrumentation system. This wired connection could be a power supply connection common to the test item and our instrumentation system. Conductive coupling is also sometimes called common impedance coupling, which implies that that the noise current and the susceptible current flow through the same impedance; tying the power leads of two systems together through a common impedance is such an example. Possible solutions to these types of problems are:

a. Using separate power buses for instrumentation and test item. If this is not feasible, then adding a decoupling capacitor at the load (our instrumentation system) may alleviate the problem.

b. Reducing the common impedance by tying the power leads together as close to the power supply source as possible. Eliminate, where possible, any stray loops in the wiring to prevent additional impedance created due to inductance (see Figure 11-2).

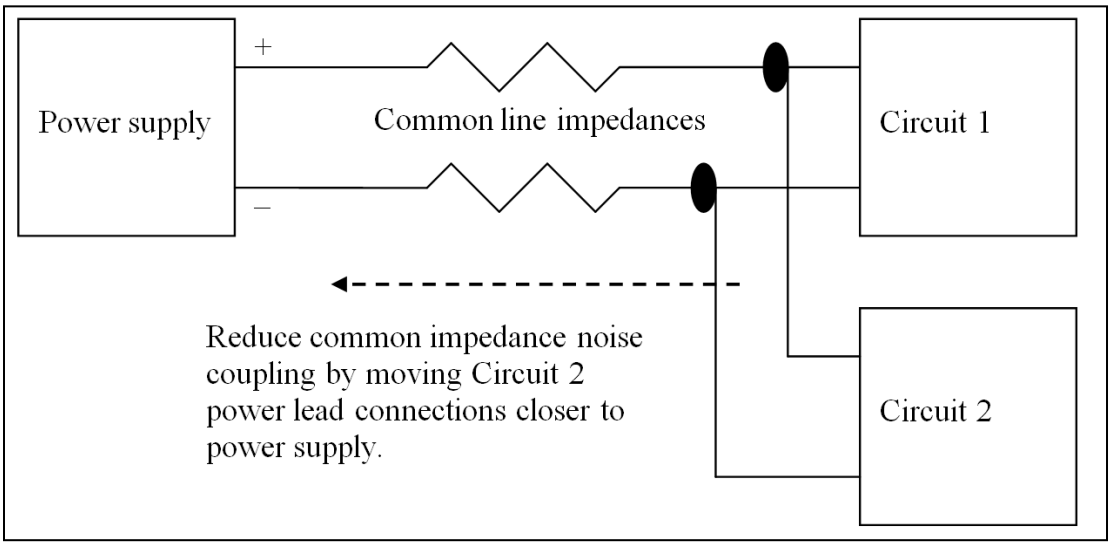

Figure 11-2. Noise Coupling Through a Common Impedance

Another example of conductive coupling is a wired connection between the instrumentation system and a diagnostic jack on the test item. Noise introduced via a signal from a test item diagnostic connector may be solved by introducing an isolation transformer or an optical isolator between the test jack signal and the instrumentation system. Signal conditioner modules are also commercially available in a variety of forms to handle these cases. Of course,

filtering the test signal prior to digitization may also solve the problem assuming the noise is not in the frequency bandwidth of interest for the test signal.

Magnetic or electric coupling most often occurs when some part of the instrumentation system is in close proximity (the near field) to a time-changing current or voltage; the problem could be from a motor, a 400 Hz alternator, or 60 Hz AC power leads. The DC and voltage are not normally an issue, except for DC motor and generator commutator noise. The noise type can be determined if it is possible to disconnect the load. If the load is disconnected and the noise problem disappears, then the coupling is magnetic because the current flow (and hence the magnetic field) is zero. If the noise problem remains, then the coupling is electric because the voltage potential at the load lead wires still exists. The most obvious solution is to keep instrumentation components as far away as practicable from sources of AC current and voltage. Also, eliminating or reducing any loops in the instrumentation wiring will help. When these options are not feasible, fixes for these types of noise coupling may be solved by proper shielding techniques that are discussed in paragraph 11-4.

Electromagnetic coupling occurs in the far field, more than a wavelength from the source. Digital harmonics generated by an integrated circuit clock, arcing electrical contacts, FM radios, can all generate this type of noise. Often, the only way to avoid this type of noise with the instrumentation system is with proper shielding (see paragraph 11-4).

11.3 Grounding

There are three basic reasons for properly grounding an instrumentation system or component:

a. safety to personnel;

b. to provide a proper voltage reference for test signals;

c. to provide a reference for the shielding of electronics from EMI.

There are several misconceptions concerning the term “ground.” Many instrumentation personnel and vendors use the terms ground and signal return interchangeably. Unfortunately, using these terms interchangeably leads to confusion when trying to establish good grounds. A current-carrying signal return wire is not the same as a non-current-carrying ground conductor. There is also ambiguity concerning the terms ground and earth. A ground connection is generally only “earthed” when concerns of lightning at a building or tower are of concern. A ground in our sense is generally a good conductor (such as metal), has a relatively large surface area (like a fighter jet or tank), and is close to our instrumentation system.

A very important characteristic of the grounding structure is that it does not carry a significant part of the signal current. “Significant” is the key word here. The same conductor can be ground for one signal and the return path for another, as is often the case in military hardware (Figure 11-3).

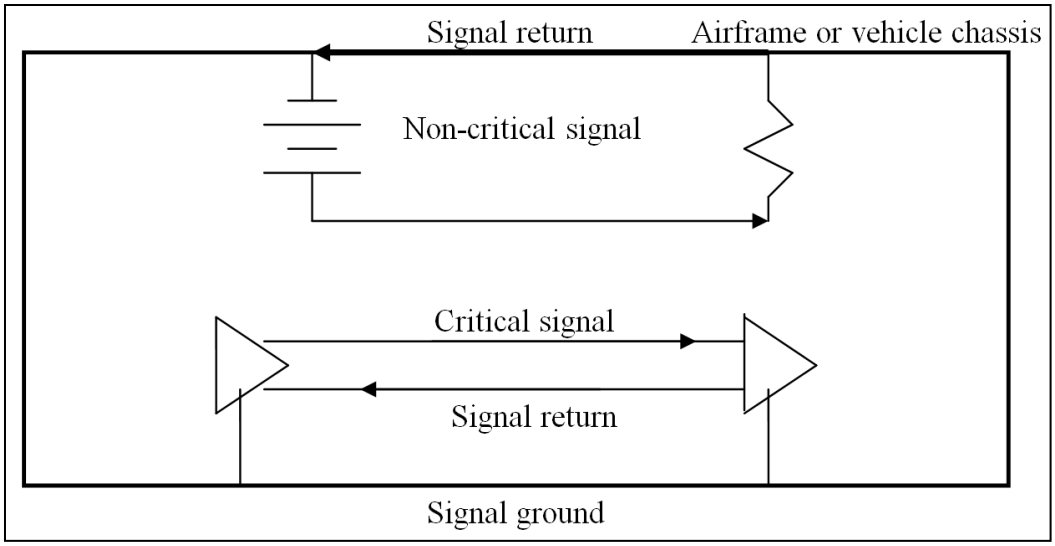

Figure 11-3. Airframe or Vehicle Chassis as Signal Return and Ground

Grounding for personnel safety is done to protect against a possible shock hazard. If a circuit is housed in a metal enclosure has a fault such that a power lead comes in contact with the inside of the enclosure, then that enclosure becomes a shock hazard to anyone who comes in contact with it (see Figure 11-4).

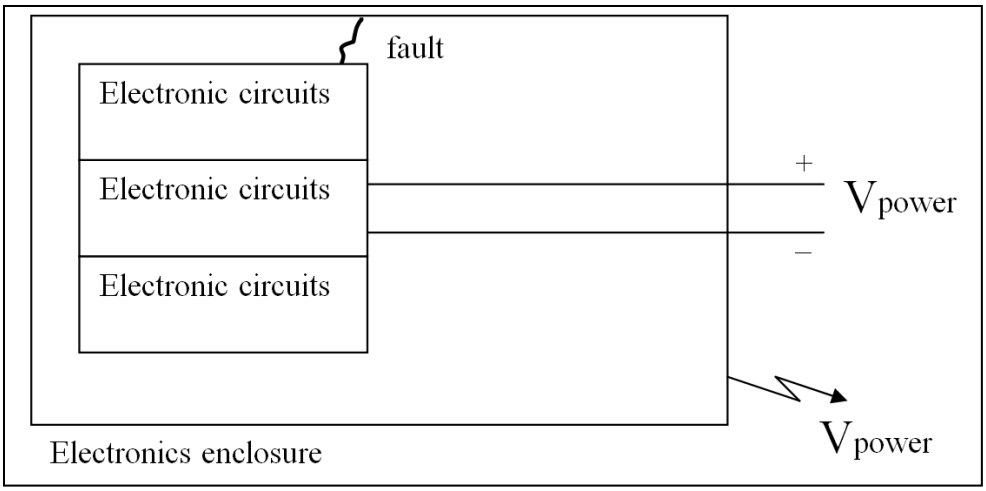

Figure 11-4. Ungrounded Enclosure as Shock Hazard

If the enclosure itself is connected to ground, and a fault occurs, the fault current will be short circuited through the enclosure to ground (and not through a person); however, assuming the power is fused or wired through a circuit breaker, the power supply will be disconnected from the faulty item and the person is protected from harm (see Figure 11-5).

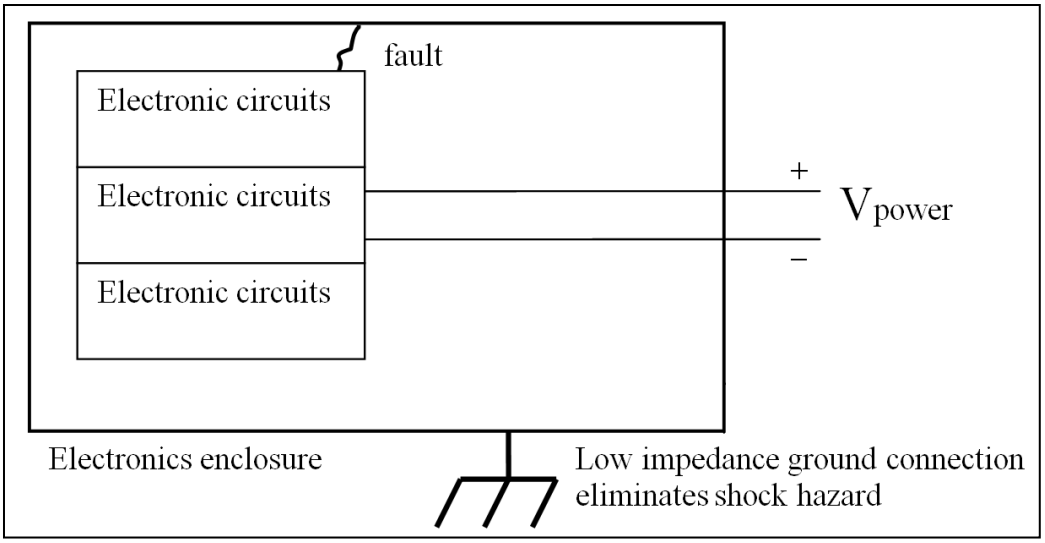

Figure 11-5. Shock Hazard Eliminated by Proper Grounding

The symbol used in Figure 11-5 and elsewhere to represent the ground connection of the enclosure is also commonly known as "chassis ground." The chassis ground of each instrumentation enclosure should be tied together to a single low impedance connection (large conductor or braid). This connection, in turn, should be connected to the chassis of the airframe or test vehicle at a single point is shown in Figure 11-6. This connection must be able to handle the worst-case fault current.

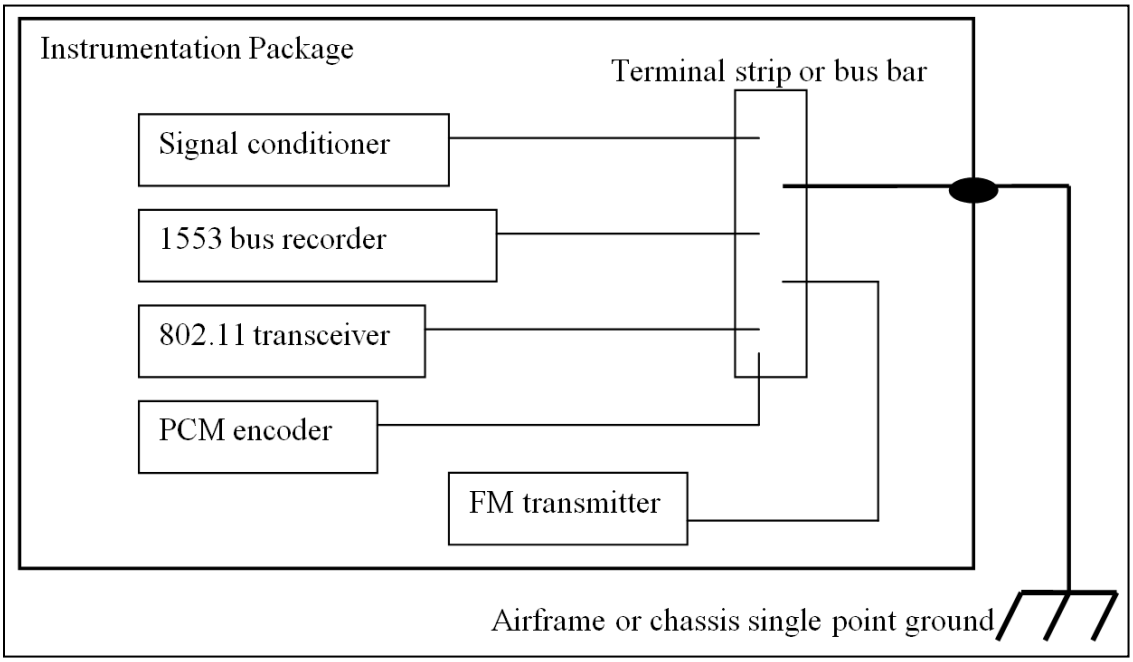

Figure 11-6. Chassis Grounds Tied Together

This technique will greatly reduce the chances of creating a ground-loop circuit, where slight differences in ground potential at different points on a ground structure cause a current to flow (Figure 11-7).

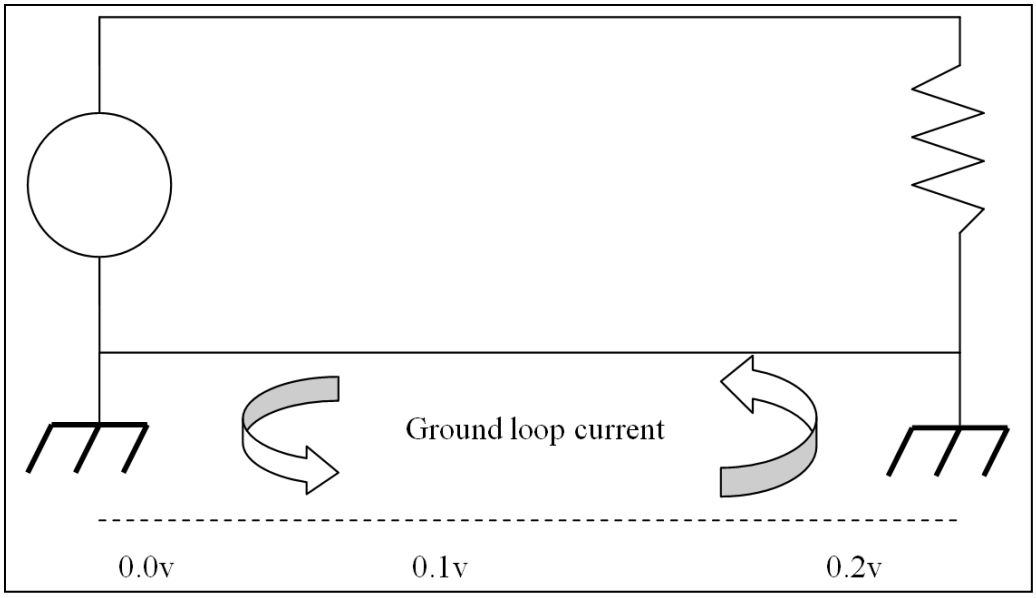

Figure 11-7. Ground Loop Created by Multiple Grounds on a Grounding Structure

While on the topic of grounding for safety, it is worth mentioning the grounding of test vehicles after flight or long trips overland. Significant static electricity potential can develop on aircraft during flight, and the same is true of ground vehicles on long distance trips. Personnel must be careful when first approaching the aircraft or test vehicle so that they do not become the path by which the static potential is discharged. This is also of great concern for refueling operations. The new engineer should be acquainted with the prescribed grounding techniques at their test facility before approaching a statically charged test item.

Power ground on many test items is also chassis ground. The low side of the power supply(s) on the test item (i.e., batteries, generators, alternators, inverters, etc.) is directly connected to the vehicle chassis or airframe.

Another ground symbol commonly in use is , which is used to define an analog or digital signal ground. Close attention should be paid to these symbols when reading or drawing schematics because in many cases these symbols will be used to incorrectly represent analog or digital signal returns.

Transducer manufacturers are guilty, almost by definition, of incorrectly using these symbols. Therefore, the instrumentation engineer and technician need to pay close attention to the context in which these symbols are used.

	Beware of what is stated as ground and signal return and what connection, if any, there is to the transducer housing. Ground loops may be unintentionally created if these things are ignored. If in question, ask an experienced engineer before a test is held up because the instrumentation system is tied into a misinterpreted ground or signal return.
	A good grounding system should minimize the noise voltage generated by currents from two or more circuits flowing through a common ground impedance. It should also avoid creating ground loops that are susceptible to magnetic fields and differences in ground potential.

Most instrumentation systems will require a minimum of three grounds:

a. low-level analog ground;

b. digital or discrete signal ground;

c. hardware ground.

Having these three grounds will minimize the chances for setting up ground loops, noise coupling through common impedances, and induced noise pickup. Typical instrumentation grounding systems are a combination of series and parallel single-point grounds. Such a combination is a compromise between the need to satisfy the electrical noise criteria and the goal of avoiding unnecessary wiring complexity. The key is to group similar signal types together so that low-level analog signal grounds are in one group, noisy switch contacts are in another group, and there is another wire for the chassis ground for enclosure(s), racks, etc. As previously described, these should normally all be tied together at a single low impedance connection to power ground, which is typically the airframe or vehicle chassis (Figure 11-8).

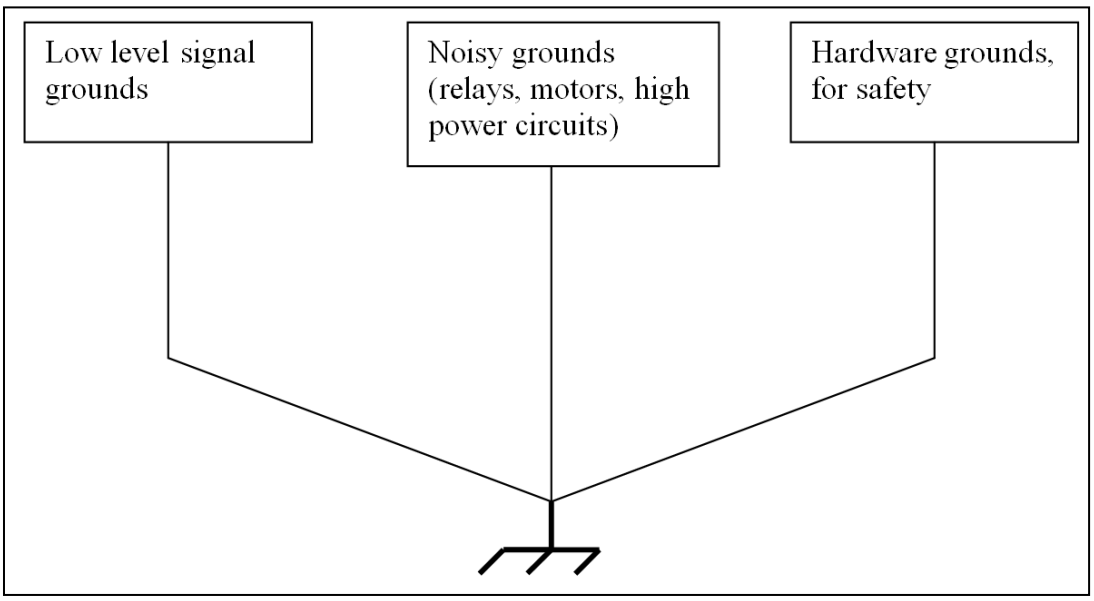

Figure 11-8. Grouping of Like Signal Types to a Single-Point Chassis Ground

11.4 Shielding

The two primary ways to minimize unwanted noise pickup are grounding and shielding. The techniques of grounding and shielding are closely interrelated. Shields may be placed around components, circuits, complete printed circuit board assemblies, and cables. A cable shield and an electrical enclosure both protect the signals from outside, unwanted EMI. Cable shields are typically made from non-magnetic aluminum foil material. A drain wire in physical contact with the foil shield is used for making the electrical connections. When properly implemented, shields can reduce a considerable amount of noise coupling. In extremely noisy environments (and if practical), a knitted-wire-mesh blanket can be placed over the entire instrumentation system and tied to chassis ground.

For the remainder of this discussion, we will focus on shielding of enclosures and cables, since that is where the majority of the noise pickup occurs.

To be an effective electrostatic shield, an electrical enclosure that is properly grounded for safety must also be connected to the zero-signal reference potential of the circuitry contained within (Figure 11-9).

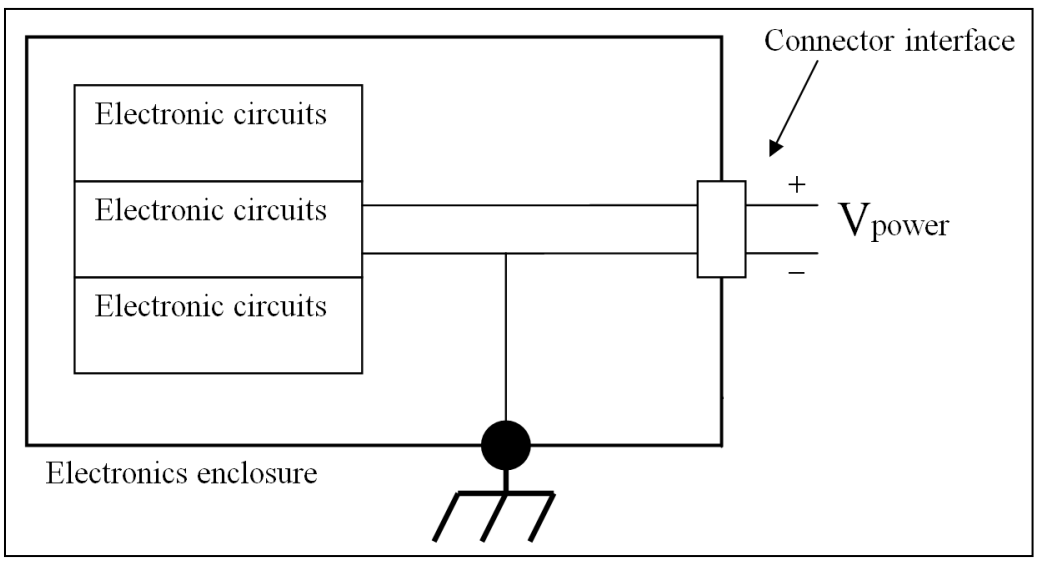

Figure 11-9. Enclosure Properly Grounded for Safety and Shielding

The connection diagram of Figure 11-9 would be applicable to a data acquisition unit or signal conditioner enclosure. Use of EMI gaskets, in addition to or in lieu of plain rubber on enclosure joints and connector openings, will help make the enclosure “electrically watertight.” EMI gaskets made of a combination of knitted-wire-mesh and neoprene are commercially available.

When cable shields are employed and grounded correctly, they become an extension of this electrostatic enclosure shield. The military specifications describing cables and insulation

are referenced in MIL-C-17[29]. The coaxial and shielded twisted pair cables are the two most common cable types used in instrumentation systems (See Figure 11-10).

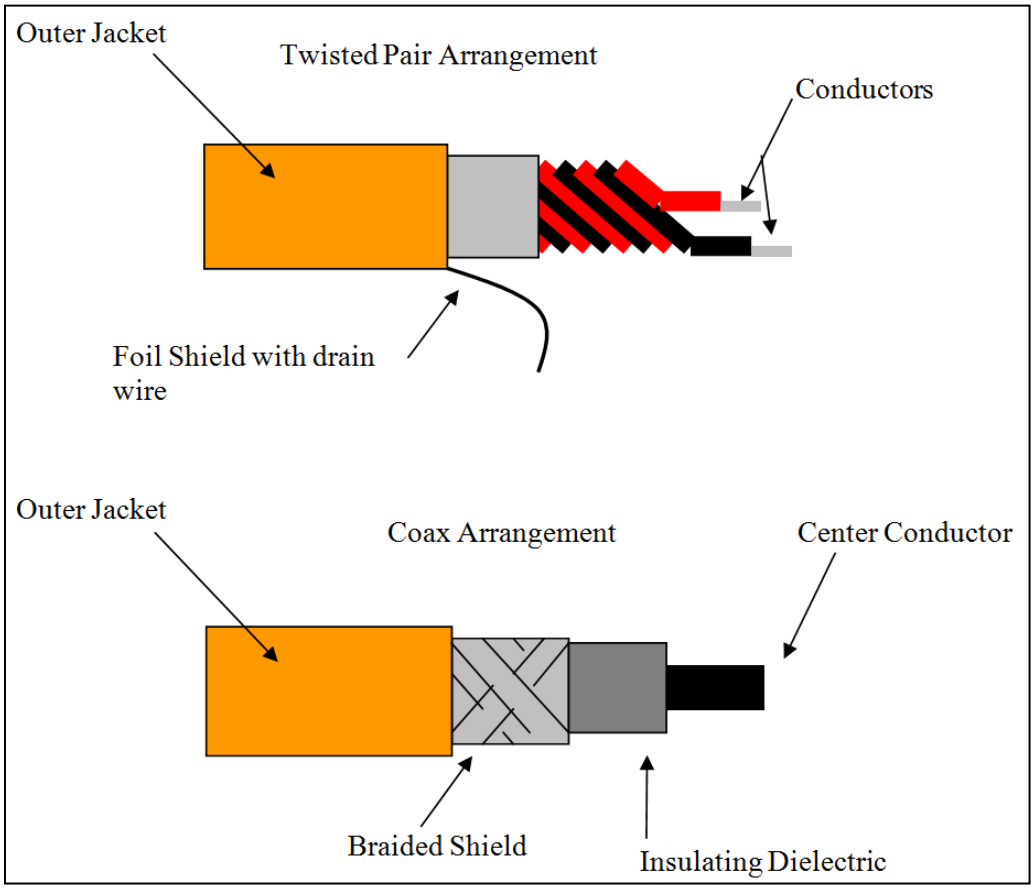

Figure 11-10. Shielded Twisted Pair and Coaxial Cable Types

The obvious difference in the two cable types is that the shielded twisted pair cable has two internal conductors of similar gauge, twisted together with a separate outer foil shield jacket. The coaxial cable has a single center conductor with an outer braid woven coaxially around. Each table type has its place in the instrumentation system, and each has advantages and disadvantages. The key is to know how and when to use each cable type to best advantage given a set of circumstances in a noisy environment.

The shielded twisted pair by virtue of its physical design is very good at rejecting magnetic and electric field effects. The two conductor twisted pair arrangement minimizes induced magnetic field effects. In addition, the outer foil shield, when grounded, will protect the conductors within from any outside electric field effects. Conversely, any electric field within the cable shield will also terminate on the shield. The main disadvantage to shielded twisted pair cable is in its useful frequency range. The maximum normal limit is about 100 kHz; however, this frequency range is sufficient for a majority of signals that instrumentation systems must support.

[29] Department of Defense. Cables, Radio Frequency, Flexible Coaxial, 50 Ohms, M17/52-00001, M17/52-RG119, Unarmored, M17/52-RG120, Armored. MIL-C-17/52B. 31 October 1988. May be superseded by update. Available at http://quicksearch.dla.mil/basic_profile.cfm?ident_number=967&method=basic.

Coaxial cable is also good at rejecting magnetic fields due to its physical design. Coaxial cable also has a more uniform characteristic impedance than shielded twisted pair and can be used with signals to about 100 MHz; however, the lack of a separate shield from signal carrying conductors limits its ability to protect against electric field effects. A single ground connection at one end of the cable provides a good degree of protection against electric field induction; but since the coaxial shield is part of the signal path, this allows for the possibility of noise currents to circulate. The resultant noise voltage is then in series with the signal voltage.

Another type of cable, the "Twinax cable," which has a second coaxial braid, is available. The outer coaxial braid can be used as a shield in a manner similar to that of the shielded twisted pair cable. Some transducers are manufactured with a short coaxial cable pigtail attached. If necessary, a transition to Twinax can be made close to the transducer to gain the advantage of the extra non-signal carrying shield. For the best protection, the rule is that the shield should not be used in the signal path for that which it is designed to protect. Also, signal cables themselves can become transducers if not securely fastened with wire straps or ties. Allowing instrumentation cables to whip around as the test vehicle performs various maneuvers can generate noise (triboelectric effect) magnitudes larger than the real signals of interest.

Single-ended signals typically use a pair of conductors in which one is ground. For the shielded twisted pair and the coaxial cable types, the recommended grounding of the shield is illustrated in Figure 11-11.

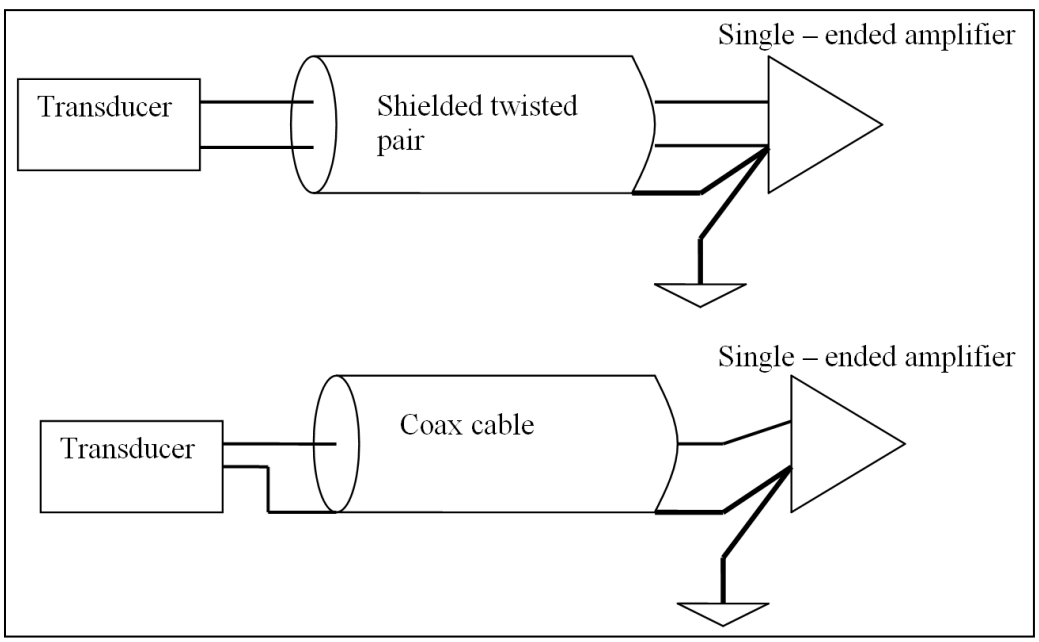

Figure 11-11. Proper Ground and Shield Arrangement for Single-Ended Signals

11.5 Other Noise Reduction Techniques

11.5.1 Balancing

A balanced circuit is a two-conductor circuit in which both conductors have the same impedance with respect to ground (see Figure 11-12). This is contrary to the single ended signal in which one conductor of a pair is used for ground. The balanced circuit makes use of differential signals that are of equal level, but of opposite polarity. As a result, when these

signals are used with a differential amplifier, any noise pickup common to the conductor pair will be subtracted out.

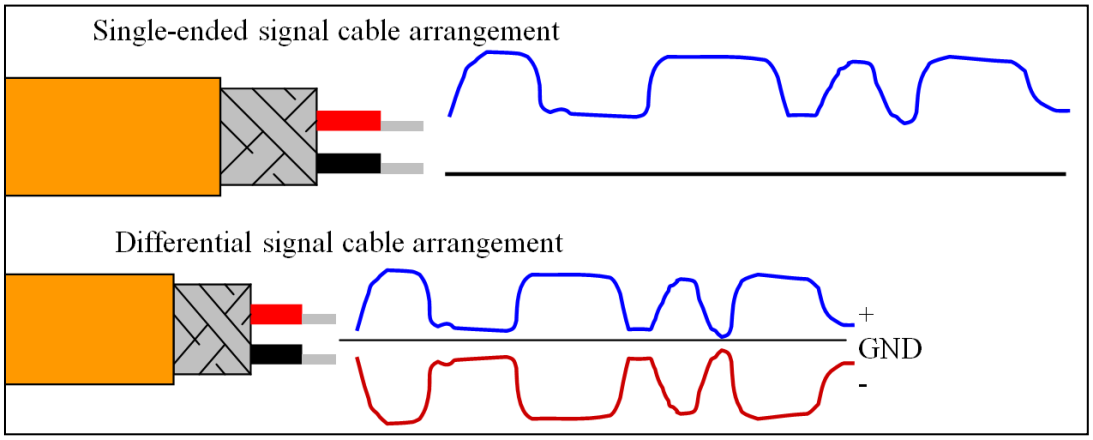

Figure 11-12. Balanced Circuit Versus Single-Ended Circuit

Recommended grounding of the shield for this type of signal (balanced circuit) is illustrated in Figure 11-13 for each of the cable types previously discussed (shielded twisted pair and coaxial cable).

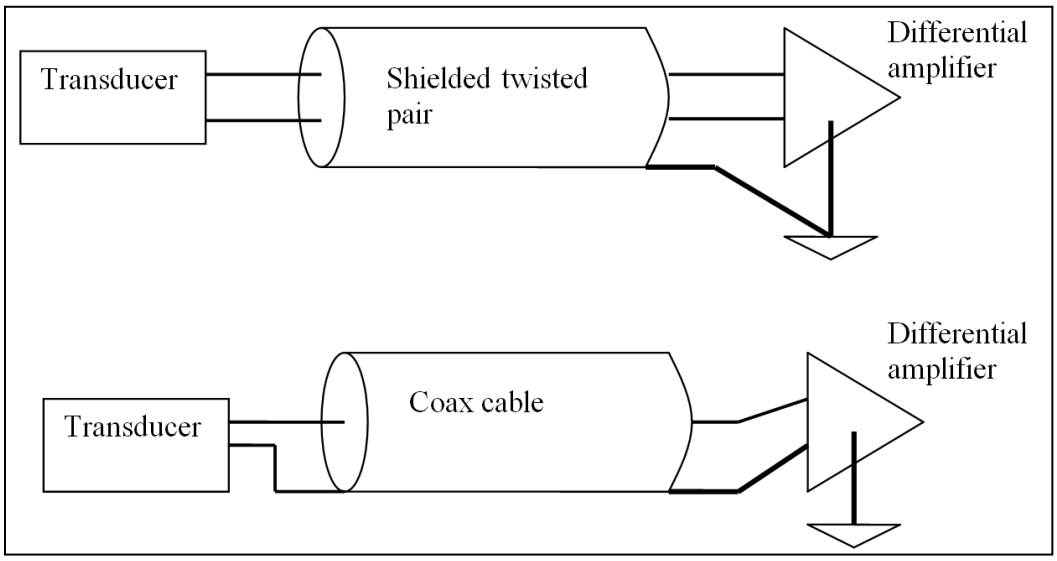

Figure 11-13. Proper Ground and Shield Arrangement for Differential Signals

11.5.2 Power supply de-coupling

Since power supplies are not ideal voltage sources, it is wise practice to provide some decoupling at each circuit or group of circuits to minimize noise coupling through the power distribution network. The RC or inductor-capacitor (LC) networks can be used to isolate circuits from the power supply. A word of caution: a dissipative filter (RC type, pictured in Figure 11-14) converts the undesirable noise voltage to heat, thereby eliminating it. The reactive filter (LC type) transfers the noise from the load (circuit) to the inductor, where it could possibly be radiated and once again become noise for another circuit. It may be necessary to shield the inductor if this type of filter is employed.

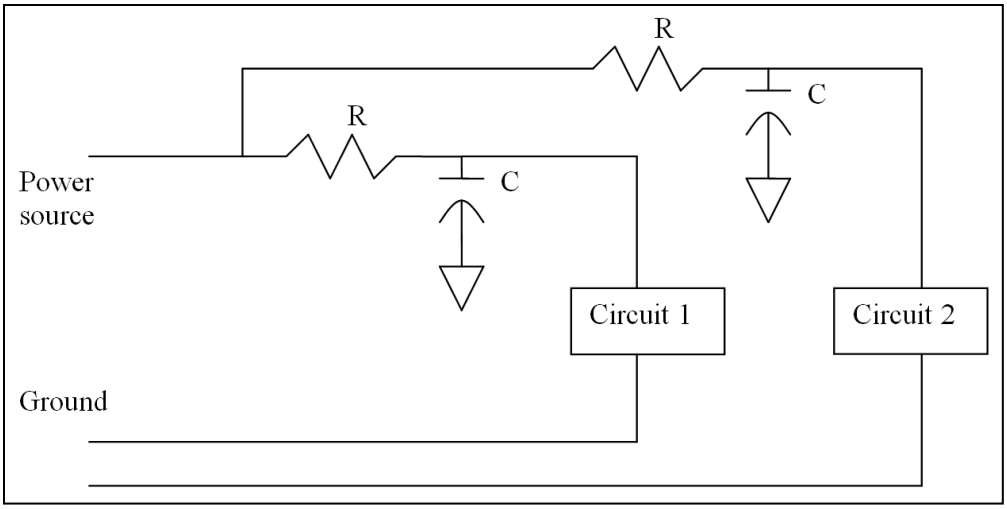

Figure 11-14. Resistor-Capacitor Type Dissipative Power Supply Decoupling Filters

11.5.3 Ferrite beads

Ferrite beads offer a simple and inexpensive way to suppress high-frequency noise in a circuit without affecting DC or low frequency response (Figure 11-15). The beads are most effective with noise above 1 MHz. They are especially effective when used to damp out high-frequency oscillations caused by switching transients or parasitic resonances within a circuit.

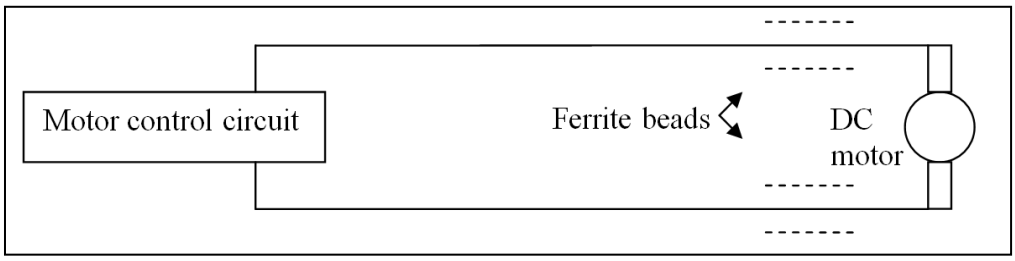

Figure 11-15. Ferrite Bead Application to Suppress DC Motor Commutator Noise

11.5.4 System bandwidth

The circuit bandwidth should be limited to what is needed for the signals of interest. Wider-than-necessary bandwidth will open the door for unwanted noise to enter.

11.5.5 Modulation and coding

Consider the possibility of using amplitude modulation, FM, and/or coding scheme (PCM) to reduce noise susceptibility of a signal or group of signals.

Much has been written on the topics of modulation and coding, and several of these references are listed in Appendix A for additional information. Two- or three-day training courses are also available from several reputable sources.

11.6 Rules of Thumb

The following are several rules of thumb for grounding, shielding, and noise reduction. Verified analytically and through experience, the rules of thumb are as follows.

a. To avoid ground loops, only ground the shield at one end, and preferably at the data acquisition unit. Ideally, this should be a low impedance ground common to chassis and power ground.

b. At noise frequencies greater than 1 MHz, multiple ground/shield connections (i.e., at both cable ends, and possibly more) may be required for the shield to remain at ground potential.

c. Minimize the length of the conductor(s) beyond the shield.

d. Several small holes for connectors on an enclosure are better than one large one of the same total area.

e. Low and high level (signal and power for example) should be on separate connectors. If they must be in the same cable bundle, separate shields should cover each pair. If they must be on the same connector, ground leads should be on intervening pins.

f. Shielding integrity should be maintained through connectors.

g. Consider alternatives such as balancing (differential versus single-ended).

h. Use only necessary bandwidth.

i. Minimize loop area of conductors, especially those of low-level signals.

j. Avoid cable plant of low-level signals near high-current or voltage equipment.

CHAPTER 12

Electric Power Load Analysis

12.1 Introduction

An electric power load analysis (EPLA) is a summation of the power source capacities and the electrical load requirements of a vehicle. It is calculated for each operating condition of the vehicle, such as maintenance, cruise, and combat. The EPLA will ensure that the electric power source(s) is sufficient to supply power to the electrical subsystems of the vehicle during all operating conditions. Proper development and application of an EPLA will prevent power brownouts or blackouts from impacting the vehicle's operations.

An EPLA (per MIL-E-7016[30]) is required to be performed on aircraft for each electric system under all operating conditions. An EPLA also specifies the format for the EPLA report. Per MIL-STD-27733[31], electrical load requirements of any new installed or activated equipment shall be identified and evaluated against available aerospace vehicle power. This chapter provides guidance for the development of the EPLA due to a temporary or a non-production vehicle modification.

12.2 Vehicle Electric System

The electric system of a typical vehicle consists of three sections:

a. a power source(s) to generate electric power;

b. a distribution system to carry the electric power to the utilization equipment;

c. the utilization equipment (load).

System complexity may range from a single source powering a single load to multiple sources powering hundreds of pieces of equipment on numerous electric buses. An example of an electric power system for a multi-engine vehicle is shown in Figure 12-1.

[30] Department of Defense. Electric Load and Power Source Capacity, Aircraft, Analysis of. MIL-E-7016F. 15 April 1988. May be superseded by update. Available at http://quicksearch.dla.mil/basic_profile.cfm?ident_number=6249&method=basic.

[31] Department of Defense. Modification and Marking Requirements for Test Equipment. MIL-STD-27733. 18 May 1998. May be superseded by update. Available at http://quicksearch.dla.mil/basic_profile.cfm?ident_number=204149&method=basic.

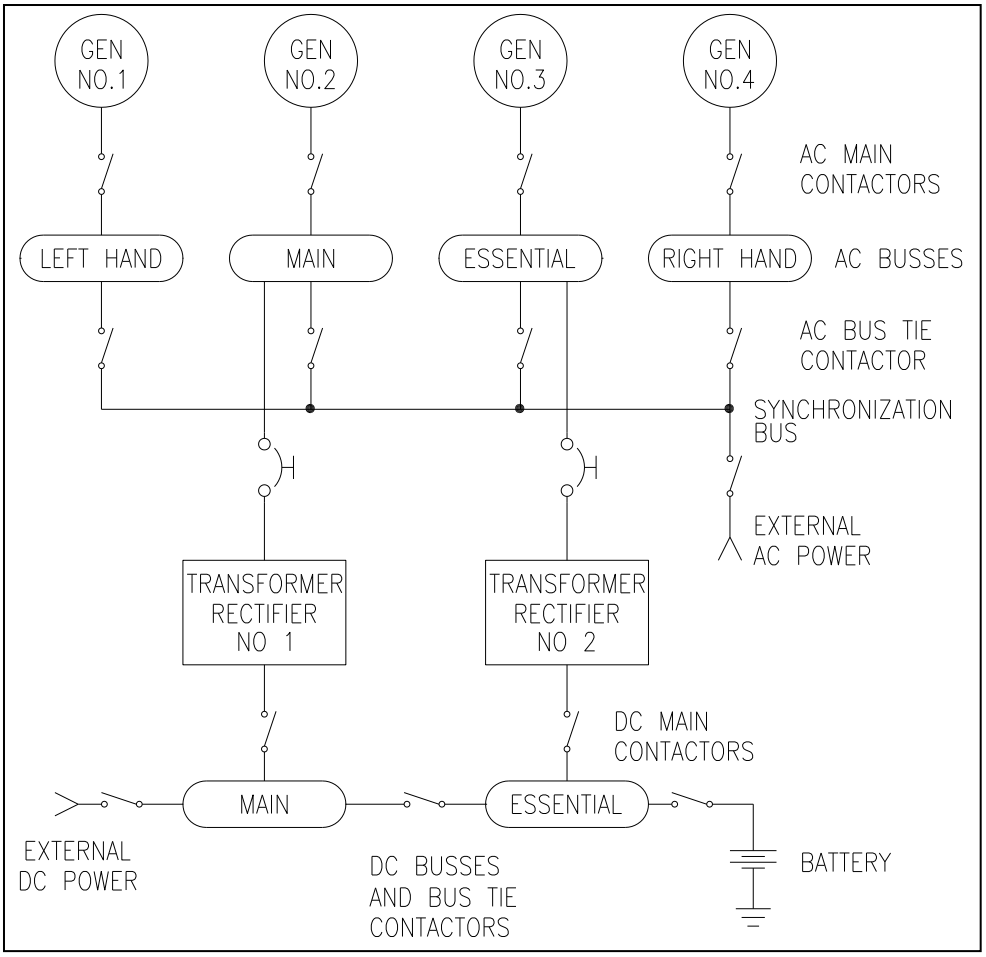

Figure 12-1. Multi-Engine Vehicle Electric Power System Example

The two categories of power sources are primary and secondary. A primary power source generates electric power from energy other than electrical and is independent of any other electrical source. Examples are generators (mechanical energy) and batteries (chemical energy). A secondary power source is equipment that transforms and/or converts primary source electric power for utilization equipment. A secondary power source is entirely dependent upon a primary source and is considered part of the load of its primary source. Examples include power inverters and transformer-rectifiers (TRs).

A typical vehicle uses one or more engine-driven generators as its primary power source. These may generate AC or DC. Most vehicles also use an alternate power source, such as an auxiliary power unit, external power unit, or batteries, to provide primary power when the engines are not running or during emergency situations. Some vehicles, such as missiles, do not have generators and use batteries as their only power source.

A vehicle will require a secondary power source when its electric equipment is incompatible with the primary power source. A secondary source provides voltage conversion or regulation for electric utilization equipment. For example, a TR converts AC generator power for DC equipment. A secondary source may also be used to provide emergency AC power from a battery bus.

The distribution system is an electrical network that directs electric current from the power source to the utilization equipment. It will consist of one or more AC and/or DC buses. Control of the distribution system is maintained through a series of relays, also called contactors. These relays allow redistribution of power in the event of generator or TR failures, or for specific mission requirements. Circuit breakers and fuses protect components of the distribution system from overload conditions.

Some vehicles use active load distributions systems. These systems monitor and tailor the load allocation automatically based on operating conditions and requirements. The vehicle manufacturer should be contacted when performing modifications on such vehicles to ensure the added equipment will not alter the performance of the distribution system.

Utilization equipment is placed on the distribution buses of the vehicle's electric system. Critical components, such as radio, flight control, and navigation equipment, are placed on essential, battery, or emergency buses. Non-essential components, such as radar, lighting, and instrumentation, are usually placed on non-essential buses. During an emergency, an alternate power system with limited capability may power only the essential, battery, or emergency bus. In order to minimize effects of a modification on emergency equipment, the instrumentation equipment should not be placed on one of these emergency buses unless there is a specific requirement to do so.

12.3 Baseline Electrical Power Load Analysis

The baseline EPLA documents the amount of electrical power the vehicle produces and consumes under all operating conditions. The EPLA addresses only the production equipment on the vehicle and does not address modification or instrumentation equipment unless that equipment is part of the vehicle's baseline. The EPLA is required for all aircraft IAW MIL-E-7016 and is produced by the vehicle's manufacturer. The baseline EPLA will contain two parts that are used in the development of the EPLA for a non-production modification:

a. a power source summary;

b. a load analysis or power consumption table(s).

12.3.1 Power source summary

The baseline EPLA will contain a power source summary that lists all of the primary and secondary power sources on a vehicle and their characteristics including:

a. description;

b. number of units;

c. power rating;

d. voltage;

e. frequency;

f. power factor;

g. phase configuration.

For DC sources, the power rating is listed in amps. For batteries, the power rating is given in A-hours. For AC sources, the power rating is given in volt-amps (VA) or kilovolt-amps (kVA). The power factor (PF) limits may be provided for AC sources and indicate the range of PF the source can provide to its bus.

12.3.2 Direct current load analysis

The baseline EPLA will include a DC and/or AC load analysis for the vehicle's production utilization equipment. For vehicles with multiple distribution buses, the equipment for each bus may be listed in a separate table, or a single table may include more than one bus. A sample DC bus load analysis table for a single DC bus is shown in Table 12-1. Each piece of utilization equipment drawing current from this bus is listed under the equipment heading. Some analyses cover vehicles with multiple equipment configurations; if this is the case, the different configurations will be indicated with a note under this heading, as in this example for the inertial navigation units. The number of units and amps per unit are also listed in the table.

Table 12-1. Example: DC Load Analysis Table for a Single DC Bus, Production Equipment

Equipment	No. of Units	Amp per Unit	TO and Climb Amps		Cruise Amps		Landing Amps	
			5 sec	avg	5 sec	avg	5 sec	avg
Engine Bleed Air Shutoff Valve	4	1.0	4.0	4.0	4.0	4.0	4.0	4.0
Flight Control Processor	1	3.0	3.0	3.0	3.0	3.0	3.0	3.0
Air Data Sensor	2	5.0	5.0	5.0	5.0	5.0	5.0	5.0
UHF Radio Receive Transmit	1	 1.4 4.0	4.0	2.0	4.0	1.5	4.0	2.0
Elevator Trim	1	10.0	10.0	5.0	5.0	1.0	10.0	5.0
Landing Lights	2	20.0	40.0	40.0			40.0	40.0
Navigation Lights	4	5.0	20.0	20.0	20.0	20.0	20.0	20.0
Dome Lights	15	0.5	7.5	7.5	7.5	7.5	7.5	7.5
Inertial Navigation Unit (Note 1)	2	6.0	12.0	12.0	12.0	12.0	12.0	12.0
Inertial Navigation Unit (Note 2)	2	4.0	8.0	8.0	8.0	8.0	8.0	8.0
TACAN Receiver No. 1 & 2	2	1.0	2.0	2.0	2.0	2.0	2.0	2.0

Notes:
1. Aircraft prior to AF78-0001
2. Aircraft AF78-0001 and up

The rest of the table shows the average current draw based on operating condition and measurement time. This table lists three different operating conditions. Typically, there would be more. For each condition, the load analysis table also lists the greatest average current over one or more time spans. Common time spans include 5-second, 30-second, 5-minute, and continuous or average. Any blanks in these sections identify equipment not typically used during that particular operating condition; for example, landing lights would not be used during

cruise. Also, the current values may vary for different time averages, as with the ultra-high frequency (UHF) radio.

Often, the table will contain a summation of current draw for the entire bus; however, if a single table covers different configurations, as in this example (Table 12-1), or if the table covers multiple buses, the summation may not be included.

12.3.3 Alternating current load analysis

The AC power consumption table is laid out in the same manner as the DC table; however, instead of tracking A, the AC power consumption table tracks both watts and volt-ampere reactive (var) or kilowatts (kW) and kilovolt-ampere reactive (kvar). The var is a measure of capacitive or inductive stored power in the circuit and is called imaginary or reactive power. The VA is the total power and is calculated by taking the root sum square sum of the total watts and total var. The PF is the ratio of real power (watts) to total power (VA). Relationship between PF, VA, watts, and var are shown using the equations below.

$$VA = \sqrt{(var)^2 + (watts)^2}$$ Eqn. 12-1

$$PF = \frac{watts}{VA}$$ Eqn. 12-2

Additionally, if the load analysis is for a multiphase bus (Table 12-2), the table will independently track the loads on each phase of the bus.

A sample load analysis table for an AC bus is shown in Table 12-2. For simplicity's sake, this table shows only a single operating condition and time average. As with the DC table, each item drawing current from the AC bus is listed under the equipment heading. If the vehicle has different possible equipment configurations, they will be indicated with a note under this heading. The number of units and load per unit per phase are also listed in Table 12-2.

The rest of Table 12-2 shows the 5-minute average power drawn. It is broken down by phase, watts, and var. Blank sections indicate a piece of equipment consuming negligible var or watts, not utilizing all three phases, or not being used during that particular operating condition. In this example there is only one configuration, and the total watts, var, and VA are calculated at the bottom of the table.

Additionally, the load on a secondary bus will be reflected back to the primary bus from which it is dependent. For example, a secondary DC bus draws power from a TR on a primary AC bus. A load analysis is developed for the secondary DC bus to ensure that the load doesn't exceed the TR's capacity. Also, the TR's load is listed on the load analysis of the primary AC bus, since it draws power from that bus. There are two ways this load may be listed; either the maximum capacity of the TR is listed for the primary AC bus, or the actual load on the TR is listed for the primary AC bus. Either way, the load on the primary bus will incorporate the efficiency and PF of the TR.

Table 12-2. Example: AC Load Analysis Tale for a Single AC Bus, Production Equipment

Equipment	Total Units	Load per Unit per Phase						5-Minute Average, Cruise					
		Phase A		Phase B		Phase C		Phase A		Phase B		Phase C	
		Watts	var	Watts	var	Watts	var	Watts	var	Watts	var	Watts	var
Boost Pump	1	200	250	200	250	200	250	200	250	200	250	200	250
HF Transceiver No 1.													
Transmit	1	2000	1000					800	280				
Receive		500	100										
Oven	1			2000						2000			
Windshield De-icing	1	1000						1000					
Windshield De-icing	1			1000						1000			
Windshield De-icing	2					1000						2000	
Main DC Bus Transformer-Rectifier	2	2333	480	2333	480	2333	480	4667	960	4667	960	4667	960
Weather Radar	1	400	200	400	200	400	200	400	200	400	200	400	200
Total kW and kvar								7.0	1.7	8.3	1.4	7.3	1.4
Total kVA								7.3		8.4		7.4	

12.3.4 Sources of the baseline Electric Power Load Analysis

The baseline EPLA must be obtained before starting an EPLA for a modification,. The baseline EPLA will not only tell you if there is enough available power for your modification, it will also let you know which electrical buses have sufficient capacity to power the additional equipment. There are many sources for this data. Often the baseline EPLA is already documented; if not, measurements or analysis will have to be performed to determine EPLA. Regardless of the source, the data in the baseline EPLA should be verified to eliminate errors.

A baseline EPLA is developed by the vehicle manufacturer during design to ensure there is sufficient electrical capacity to power utilization equipment with adequate reserve. For aircraft, this is required per MIL-E-7016, which also specifies the format; however, the data within the manufacturer's EPLA may be outdated and should be validated.

The vehicle's technical orders (TO) will normally contain a baseline EPLA of all production equipment on the vehicle. The TO will list both power sources and utilization equipment, along with their properties. The TO will usually contain up-to-date information, but it should be checked for errors. Also, multiple vehicle configurations may be listed in the TO. The configuration of the vehicle being modified should be validated against the TO when performing an EPLA analysis.

If the vehicle has a previous modification, whether permanent or temporary, there should be an EPLA included with the modification documentation. The baseline EPLA contained in the documentation will be a good starting point for the new modification; however, the baseline will need to be revised if it is not up-to-date.

The most accurate way to determine a vehicle's baseline power requirements is to instrument the power distribution system; however, this can be very expensive, and care must be taken to ensure the vehicle's consumption is accurately measured. All applicable operating conditions must also be taken into account and all equipment must be functioning properly. Finally, any current probes need to be placed in the proper location to measure all of the current provided to the bus placed so as not to interfere with the bus operation.

If a baseline EPLA does not exist and instrumenting the power system is not feasible, then manual calculations of the baseline power requirements must be accomplished. Manual calculations are done by identifying the power sources for the vehicle and identifying the electrical equipment tied to each source. Reviewing electrical schematics or conducting a vehicle inspection will provide this information. The electrical characteristics for each source and the connected electrical utilization equipment can normally be obtained from vehicle documentation, from a data plate on the equipment, or by contacting the equipment or vehicle manufacturer. Power measurements of individual components will also determine their requirements, but measurements must be taken under representative conditions.

Circuit breakers are used to protect wire and equipment, but they are not meant to regulate power. Circuit breaker ratings may be 10 times higher than circuit requirements. There may also be circuit breakers in hidden panels. Some equipment may be protected by fusible links contained within the wiring harness themselves, while other equipment may not be protected at all. There may also be one breaker feeding an array of other breakers. Adding circuit breaker ratings can lead to large errors and should only be used as a last resort.

12.3.5 Common errors in the baseline electric power load analysis

Often, the baseline EPLA values are extremely conservative. This is not a problem unless there is insufficient capacity to power the modification equipment. In some cases, the baseline EPLA indicates insufficient capacity for even the production equipment. In either case, the power consumption requirements need to be investigated further.

There are many ways in which the baseline EPLA can be inaccurate. Typically, power consumption values obtained by the manufacturer are conservative. There may be errors in the EPLA values or in the calculations themselves. Also, equipment that was removed or added during a production modification may not be properly accounted for.

Manufacturer specifications for power consumption of a piece of equipment are often stated as worst-case and may be off by a factor of two or more. Often the specification will state minimum, maximum, and nominal numbers, but conservative human nature will lure us to list maximum numbers rather than nominal. While this provides a valuable safety margin, it may give twice the load value than what is actually drawn and can limit the ability to modify the aircraft. Instrumenting the equipment or the bus will provide a more realistic value.

It is possible that the calculations and values given for equipment in an EPLA are simply wrong. In one case, a radio was listed as drawing 800 watts/600 var on phase A and phase B, but 8000 watts/600 var on phase C. This turned out to be a simple typographical error, but would have prevented a modification to the aircraft and would have also falsely indicated a large phase unbalance. It is important to take a look at the baseline EPLA to see if anything stands out as warranting further investigation, and errors should be reported to the agency responsible for the baseline EPLA.

Each vehicle in a series may have different equipment configurations due to its original configuration or production modifications. Lapses in configuration control provide a potential source of error to the baseline EPLA. It is important to understand the configuration of the vehicle you are modifying and trace its configuration errors to the EPLA. Again, if errors are found, they should be reported to the agency responsible for the EPLA.

After checking and correcting errors, it is possible there is still not enough power for the modification; however, there may be equipment in the EPLA that is not normally used or won't be needed during the test period. It may be necessary to sit down with vehicle crew and/or maintenance personnel and review the items in the EPLA to see what equipment is not required. Any restricted equipment operation, however, needs to be identified in the modification documentation.

12.4 Electric Power Load Analysis due to a Vehicle Modification

The EPLA due to a non-production modification will consist of two parts; the analysis of added loads and the modification EPLA summary. The analysis of added loads lists all of the non-production modification equipment on the vehicle and sums its electric power requirements. The modification EPLA summary combines the vehicle's baseline EPLA with the analysis of added loads to summarize the load requirements on the vehicle due to both production and non-production equipment.

12.4.1 Analysis of added loads

Electric power drawn by non-production modification equipment is documented in the analysis of added loads, as shown in Table 12-3. This example table lists equipment from both

the new and previous modifications to the vehicle. All electrical equipment, even if they draw negligible loads, such as the 1553 data converter in Table 12-3, should be included. The table will also identify each vehicle bus that has equipment placed on it. In this example, the DC and AC equipment is placed on the main DC and main AC buses, respectively.

Table 12-3. Modification-Added Loads Analysis

Bus			Main DC	Main AC					
Phase				A		B		C	
Item	Manufacturer	Part #	Amps	watts	vars	watts	vars	watts	vars
Radar R/T	Farsight	ABW23	7.1						
Radar Heater	Farsight	ABW23H	3.6						
Camera Power	STI	MJ2812	0.5						
1553 Data Conv	MMB	DC1124	0.0						
Air Data Computer	MMB	ADC1	0.9						
HUD Display	MMB	HD1	3.0						
Total Main DC Reflected to Main AC Bus through TR, 0.90 PF, 90% efficiency				157	91	157	91	157	91
HUD Driver*	MMB	HD1D		57	28	57	28	57	28
Radar Signal Proc*	Farsight	ABW24P		350	170				
Rack Instrumentation, see supplemental information **				599	528	599	528	599	528
*Assume .90 PF									
Total			**15.2**	**1163**	**816**	**813**	**647**	**813**	**647**
Supplemental Information: 60 Hz Rack Instrumentation powered through 2.5kVA, 3 phase input, 1 phase output uninteruptible power supply (UPS) (PowerTime UPS25). UPS powered from Left Hand AC bus and included above, 0.75PF, 95% efficiency									
				watts	vars				
** Rack Instrumentation									
LCD Monitor	Video World	LCD17		60	29				
Computer	PC R Us	H2117		400	194				
GPS Clock	Time R Us	L5		15	7				
Digital Data Rcdr	PC R Us	R2		400	194				
Radar Monitor Panel	Farsight	ABW23M		30	15				
Recorder x 4	Video World	VCR22		652	100				
UPS Battery Charging				62	0				
Total				**1619**	**538**				
VA				**1706**					
% Bus Load				**68%**					
Power Factor				**95%**					

Completing the analysis for DC equipment consists of summing the current draw of the modification equipment. If equipment is drawing current from separate buses, each bus should be documented in separate columns of the spreadsheet or in separate spreadsheets. Current requirements for equipment are typically listed in the manufacturer's specifications. The manufacturer will often list minimum, maximum, and nominal values. The nominal value should be used for the EPLA; however, if a large startup transient is indicated, it should be considered in the design and analysis. If watts are provided instead of amps, the amps are determined by dividing power by voltage, using the nominal value for voltage on the given bus.

$$Amps = \frac{Watts}{Volts}$$ Eqn. 12-3

If neither current nor power requirements are provided by the manufacturer, the current can be measured using an ammeter under operationally representative conditions. New equipment must be compatible with the voltage rating for the bus; otherwise, a regulator or power supply may be required.

The AC analysis involves independently summing var and watts of the added equipment. For multiple phase systems, such as the example of Table 12-3, each phase is also handled independently. Even if power is drawn from only one phase of a multiple phase bus, all three phases need to be included in the analysis.

As with DC, the equipment's power requirements are usually available from the manufacturer's specifications and the nominal value should be used. Watts are typically listed for AC equipment. The PF may or may not be listed. If it is not, it may be obtained by calling the manufacturer or by taking power measurements. If it is not available, it may be assumed; however, any assumption should be noted in the analysis. The heads-up display driver and radar signal processor in Table 12-3 are assumed to have a PF of 0.90.

If var is not listed in the specification, it can be calculated from watts and PF using equation 12-4.

$$vars = \frac{watts}{PF}\sqrt{1 - PF^2}$$ Eqn. 12-4

Both var and watts are tracked in Table 12-3 and in the EPLA summary. The VA is not calculated until the end of the EPLA summary and will include both the production equipment and the modification equipment.

A vehicle often contains a secondary bus that receives its power through power converters from a primary bus. The baseline EPLA for the primary bus tracks this in one of two ways: Either the actual secondary loads are reflected through the converter to the primary bus, or the converter is assumed to be fully loaded.

If only the actual loads on the secondary bus are reflected to the primary bus, the modification loads added to the secondary bus will need to be reflected back to the primary bus (as shown in Table 12-3). The main DC bus is driven by the main AC bus. The sum of the loads on the main DC bus is shown in the table. The additional watts and var added to the main AC bus due to the additional load on the main DC bus are also calculated and listed in the table. The efficiency and PF of the converter are used for this calculation.

If the converter is assumed to be fully loaded in the baseline EPLA, then the primary source loads are already accounted for. Only the secondary bus analysis is required in the EPLA. Table 12-3 also shows the addition of an instrumentation bus. The 60 Hz equipment is supplied power through an uninterruptible power supply (UPS). The equipment powered by this bus is included in the bottom section of Table 12-3, listed as supplemental information. As with a vehicle bus, both watts and var need to be tracked. Since the UPS contains a battery, its charging

current is included in Table 12-3. The VA total is computed at the bottom of the section, and is referenced back to the main AC bus to which the UPS is connected.

On any secondary bus, the efficiency and PF of the converter need to be considered. The load on a primary bus due to a secondary bus power converter is determined using the equations below:

$$DC \rightarrow DC \quad \Rightarrow \quad amps_{input} = \frac{amps_{output} \bullet V_{output}}{efficiency \bullet V_{input}}$$

Eqn. 12-5

$$DC \rightarrow AC \quad \Rightarrow \quad amps_{input} = \frac{VA_{output}}{efficiency \bullet V_{input}}$$

Eqn. 12-6

$$AC \rightarrow DC \quad \Rightarrow \quad watts_{input} = \frac{amps_{output} \bullet V_{output}}{efficiency}$$

Eqn. 12-7

$$AC \rightarrow AC \quad \Rightarrow \quad watts_{input} = \frac{VA_{output}}{efficiency}$$

Eqn. 12-8

For primary AC buses, var are calculated from the watts input and PF of the converter using Equation 12-4. The analysis should also show that the secondary instrumentation bus is within the power converter's capability. It is acceptable to assume the converter is fully loaded, as long as its load is kept within capacity when reflecting the load to the primary bus.

12.4.2 Modification electric power load analysis summary

The modification EPLA summary will include the vehicle's source power capacity, the production loads, and the modification loads. The analysis will ensure there is sufficient capacity to power both production and modification equipment. A single summary sheet should be included for each electrical bus that is affected by the modification. In addition, supporting documentation, such as baseline power source and power consumption summaries for production equipment, may be included.

Examples of DC and AC modification EPLA summaries are shown in Table 12-4 and Table 12-5. These tables include identifying information for the vehicle and the engineer completing the analysis. The analysis components in these tables are described below.

Table 12-4. DC Electric Power Loads Analysis

DC ELECTRIC POWER LOADS ANALYSIS			
VEHICLE B-53	S/N 77-0001	PROGRAM MANAGER Ben Control	DESIGN ENGINEER Jonny Addsalot
MODIFICATION NUMBER		MAIN DC BUS (AMPS)	NOTES
A. POWER SOURCE CAPACITY		200.0	Main DC Bus, 1-200A TR
B. BASELINE POWER REQUIREMENTS		85.5	This analysis based on landing condition. Landing condition requires most power. Baseline loads derived from TO1B-53-2-14, Tables 7-1 and 8-1.
C. POWER CONSUMED BY ALL MODIFICATIONS		15.2	
D. TOTAL POWER CONSUMPTION D = B + C		100.7	
E. POWER AVAILABLE FOR FUTURE MODIFICATIONS E = A - D		99.3	
F. % BUS LOADING F = (D / A) x 100%		50%	
Remarks			
PREPARED BY: Jonny Addsalot		SIGNATURE	DATE

Table 12-5. AC Electric Power Loads Analysis

VEHICLE	S/N	MANAGER	DESIGN ENGINEER
B-53	77-0001	Ben Control	Jonny Addsalot

MODIFICATION NUMBER	Main AC									NOTES
	Phase A			Phase B			Phase C			
M06001A	kVA	kilowatts	kVARS	kVA	kilowatts	kVARS	kVA	kilowatts	kVARS	
A. POWER SOURCE CAPACITY	13.33			13.33			13.33			Main AC Bus, 1 - 40kVA Generator
B. BASELINE POWER REQUIREMENTS		7.00	1.70		8.30	1.40		7.30	1.40	This analysis based on landing condition. Landing condition requires most power. Baseline loads derived from TO1B-53-2-14, Tables 7-1 and 8-1.
C. POWER CONSUMED BY ALL MODIFICATIONS		1.16	0.82		0.81	0.65		0.81	0.65	
D. TOTAL POWER CONSUMPTION D = B + C kVA = ?(kilowatts^2 + kvars^2)	8.54	8.16	2.52	9.34	9.11	2.05	8.37	8.11	2.05	
E. POWER AVAILABLE FOR FUTURE MODIFICATIONS E = A - D	4.79			3.99			4.97			
F. % BUS LOADING F = (D / A) x 100%	64%			70%			63%			
G. TOTAL LOAD POWER FACTOR G = $D_{kilowatts}$ / D_{kVA}	0.96			0.98			0.97			
H. PHASE UNBALANCE H = [MAX($D_{Phase\ kVA}$) - MIN($D_{Phase\ kVA}$)] / A_{Phase}	7%									

Remarks:

PREPARED BY:	SIGNATURE	DATE
Jonny Addsalot		

The power source capacity section lists the amperage rating of the source of a DC bus or the VA or kVA rating of the source of an AC bus. Notes should include information identifying the source and any of its unique or important features. For a battery bus, the A-hour rating of the battery is listed in this section.

The baseline power requirements section lists the power consumed by the production systems on the aircraft. The analysis should list the loads for the operating condition requiring the most power during which the modification equipment will be used. This condition should be noted in the analysis. If another operating condition uses more power, it should be noted in the analysis as well. Notes should reference the source of the data. The baseline power consumption tables may be included; however, these tables often contain many pages and could be burdensome.

The power consumed by all modifications section lists the power consumed by all non-production modifications, both current and previous. Values in this section come from the added loads analysis spreadsheet. If the modification contains reconfigurable equipment, loads for all known configurations should be determined and the greatest load should be included in this section. If an instrumentation allocation is utilized for the vehicle, then this section will show only that allocation and will not need to be updated for each new modification or configuration, as long as the allocation is not exceeded.

The total power consumption section lists the sum of baseline power requirements and power consumed by all modifications to determine the total power consumption on that bus. For DC analysis, the amps are summed directly. For AC analysis, watts and var are summed independently, and then VA or kVA is calculated from their totals using equation 12-1.

The power available for future modifications section lists the difference between the total power consumption and the power source capacity to determine the power available for future modifications. The percentage value is determined using amps for DC buses and VA or kVA for AC buses.

The percent bus loading section shows the percentage of the source capacity that is used by both production and modification equipment. The percentage value is determined using amps for DC buses and VA or kVA for AC buses. This value should be kept below 90%. For battery buses, this section lists the battery life for the bus based on the battery A-hour rating and total power consumption using the equation below.

$$t(hours) = \frac{amps_{total}}{amp \bullet hours_{battery}} \qquad \text{Eqn. 12-9}$$

The AC analysis contains a total load PF section. The PF is the ratio of total power consumption watts to VA, as shown in equation 12-2. The power source summary should be checked to see if there are minimum requirements for PF.

The phase unbalance section only applies to multiple-phase buses and indicates how evenly loaded the different phases of the bus are. The phase unbalance is the ratio of the difference between the maximum and minimum phase loads, to the source capacity for a single phase, as shown below. The phase unbalance should be kept below 10%. Note there are

alternate definitions that would result in different values. Again, the power source summary should be checked to see if there are stricter requirements for phase unbalance.

$$Phase \quad Unbalance = \frac{VA_{\max \quad phase} - VA_{\min \quad phase}}{VA_{source \quad phase \quad capacity}} \bullet 100\%$$

Eqn. 12-10

Notes should be used abundantly in the EPLA to document the sources of information and to identify assumptions made, if any.

12.5 Electric Power Load Analysis Maintenance and Instrumentation

Once the modification EPLA is completed for a vehicle, it must be maintained. A new production or non-production modification will normally require a revision of the EPLA. A production modification will require an update to the baseline values in sections A and B of the modification EPLA summary. A non-production modification will require the analysis of added loads to be updated and the results incorporated into section C of the modification EPLA summary. Either type of modification will require the remainder of the modification EPLA summary to be recalculated.

Often, a test vehicle receives numerous modifications or accommodates multiple configurations of instrumentation equipment for such a vehicle. An instrumentation allocation for electric power will simplify the EPLA process.

An instrumentation allocation specifies the maximum value of DC amps and AC VA for the instrumentation equipment. It also specifies which of the vehicle's electric bus (or buses) the instrumentation load is placed on. The allocation is listed in section C of the modification EPLA summary. In some cases the allocation is placed in the baseline EPLA itself and the modification EPLA summary is not required.

The effect of instrumentation allocations is to decouple the baseline EPLA from the modification EPLA. For a production modification, the baseline EPLA is updated by the vehicle manufacturer or item manager. If required, the modification EPLA summary is revised based on the new baseline EPLA, but the analysis of added loads is unaffected.

For a non-production modification, the analysis of added loads is updated to reflect the removed or installed equipment as a part of the modification or reconfiguration. As long as the instrumentation load remains less than the allocation, the modification EPLA summary does not need updating.

12.6 Summary

An EPLA is a summation of the power source capacities and the electrical load requirements of a vehicle. An EPLA will ensure that the electric power source(s) will be capable of supplying power to the electrical subsystems of the vehicle during all operating conditions. It will prevent power brownouts or blackouts from impacting the vehicle's mission.

A typical vehicle's electric system consists of three sections. The sections are a power source(s) to generate electric power, a distribution system to carry the electric power to the utilization equipment; and the utilization equipment (load). A system's complexity may range

from a single source powering a single load, to multiple sources powering hundreds of pieces of equipment on numerous electric buses.

The baseline EPLA documents the amount of electrical power the vehicle produces and consumes under all operating conditions. The baseline EPLA includes only the production equipment on the vehicle. It does not include modification or instrumentation equipment unless that equipment is part of the vehicle's baseline. For a non-production modification The baseline EPLA will contain two parts that are used in the development of the EPLA:

a. a power source summary;

b. a load analysis or power consumption table(s).

The EPLA that is due to a non-production modification will consist of two parts, which are outlined below:

a. The analysis of added loads. A list of all the non-production modification equipment on the vehicle and a sum of its electric power requirements.

b. The modification EPLA summary. A combination of the vehicle's baseline EPLA with the analysis of added loads to summarize the load requirements on the vehicle due to both production and non-production equipment.

Even after the modification EPLA is completed for a vehicle, the EPLA must be maintained. A new production or non-production modification will normally require an update to the EPLA. If a test vehicle receives numerous modifications or multiple configurations, an instrumentation allocation for electric power will simplify the EPLA process.

APPPENDIX A

Citations

Aeronautical Radio, Incorporated. Digital Data System Compendium. ARINC Report 419-3. November 1984. Available for purchase at https://www.arinc.com/cf/store/catalog_detail.cfm?item_id=90.

———. Digital Information Transfer System (DITS) Parts 1-4. ARINC Specification 429P1-P4. Available for purchase at https://www.arinc.com/cf/store/catalog.cfm?prod_group_id=1&category_group_id=1.

———. Multi-Transmitter Data Bus Parts 1 and 2. ARINC Specification 629P1-5, 629P2-2. Available for purchase at https://www.arinc.com/cf/store/catalog.cfm?prod_group_id=1&category_group_id=3.

American Water Works Association. Cold-Water Meters - Turbine Type, for Customer Service. AWWA C701. 22 January 2012. May be superseded by update. Available for purchase at http://engineers.ihs.com/document/abstract/WDCSACAAAAAAAAAA.

———. Propeller Type Meters for Waterworks Applications. AWWA C704. 10 June 2012. May be superseded by update. Available for purchase at http://engineers.ihs.com/document/abstract/YJSKKCAAAAAAAAAA.

Beheim, G., A.A. Ned, F. Masheeb, A.D. Kurtz, and J.M. Wolff. *Dynamic Presure Measurements Using Silicon Carbide Transducers*. 19th International Congress on Instrumentation in Aerospace Simulation Facilities. Cleveland, OH. 27-30 August 2001.

Bell & Howell Co. Datatape Division. *Magnetic Tape Recording Technical Fundamentals*. Pasadena: Bell & Howell, 1976. Revised 1986.

Department of Defense. Aircraft Electric Power Characteristics. MIL-STD-704F. 12 March 2004. May be superseded by update. Available at http://quicksearch.dla.mil/basic_profile.cfm?ident_number=35901&method=basic.

———. Cables, Radio Frequency, Flexible Coaxial, 50 Ohms, M17/52-00001, M17/52-RG119, Unarmored, M17/52-RG120, Armored. MIL-C-17/52B. 31 October 1988. May be superseded by update. Available at http://quicksearch.dla.mil/basic_profile.cfm?ident_number=967&method=basic.

———. *Clearing and Sanitization Matrix* in Industrial Security Letter 2007-01. 11 October, 2007. May be superseded by update. Available at http://www.dss.mil/documents/pressroom/isl_2007_01_oct_11_2007_final_agreement.pdf.

———. Electric Load and Power Source Capacity, Aircraft, Analysis of. MIL-E-7016F. 15 April 1988. May be superseded by update. Available at http://quicksearch.dla.mil/basic_profile.cfm?ident_number=6249&method=basic.

———. Modification and Marking Requirements for Test Equipment. MIL-STD-27733. 18 May 1998. May be superseded by update. Available at http://quicksearch.dla.mil/basic_profile.cfm?ident_number=204149&method=basic.

———. National Industrial Security Program Operating Manual. DoD 5220.22-M. 28 February, 2006. May be superseded by update. Available at http://www.dss.mil/documents/odaa/nispom2006-5220.pdf.

———. Requirements for the Control of Electromagnetic Interference Characteristics of Subsystems and Equipment. MIL-STD-461. 10 December 2007. May be superseded by update. Available at http://quicksearch.dla.mil/basic_profile.cfm?ident_number=35789&method=basic.

Department of the Army. Information Assurance. AR 25-2. Rapid Action Revision issued 23 March 2009. May be superseded by update. Available at http://www.apd.army.mil/pdffiles/r25_2.pdf.

Department of the Navy. Remanence Security Guidebook. IA Pub 5239-26. May be superseded by update. Available to Navy personnel at https://infosec.navy.mil/pub/docs/documents/navyn/ia/don_ia_p-5239-26.pdf.

Himelblau, H., J. W. Wise, A. G. Piersol, and M. R. Grundvig. Handbook for Dynamic Data Acquisition and Analysis. IES Recommended Practice 012.1. 1994. Available at http://hdl.handle.net/2014/33780.

International Telecommunications Union. "1200 Bits per Second Duplex Modem Standardized for Use in the General Switched Telephone Network and on Point-to-Point 2-wire Leased Telephone-Type Circuits." V.22. May be superseded by update. Available at http://www.itu.int/rec/T-REC-V.22/en.

National Security Agency. NSA/CSS Storage Device Declassification Manual. NSA/CSSM 9-12. May be superseded by update. Available at http://www.nsa.gov/ia/_files/Government/MDG/NSA_CSS_Storage_Device_Declassification_Manual.pdf.

Omega Engineering. "Transactions" Volume 4. Available at http://www.omega.com/literature/transactions/Transactions_Vol_IV.pdf.

PCB Piezotronics corporate website. http://stage.pcb.com.

Peter K. Stein. "Data Insurance." Paper presented during 19th Transducer Workshop, 20-21 June 2000. Available at http://www.wsmr.army.mil/RCCsite/Documents/Transducer%20Workshops.

———. *The Unified Approach to the Engineering of Measurement Systems*. 7th revised printing. Phoenix: Stein Engineering Services, 1995.

Range Commanders Council. Telemetry Applications Handbook. RCC 119-06. May 2006. May be superseded by update. Available at http://www.wsmr.army.mil/RCCSITE/Pages/Publications.aspx.

———. Telemetry Standards. IRIG Standard 106. June 2011. May be superseded by update. Available at http://www.wsmr.army.mil/RCCSITE/Pages/Publications.aspx.

———. Telemetry Systems Radio Frequency Handbook. RCC 120-08. March 2008. May be superseded by update. Available at http://www.wsmr.army.mil/RCCSITE/Pages/Publications.aspx.

———. Test Methods for Vehicle Telemetry Systems. RCC 118-12 Vol. 1. May 2012. May be superseded by update. Available at http://www.wsmr.army.mil/RCCSITE/Pages/Publications.aspx.

SBS Technologies, Inc. "ARINC 429 Commentary." Rescinded; available to RCC members with Private Portal access at https://wsdm.wsmr.army.mil/site/rccpri/Publications/121-13_Instrumentation%20Engineers%20Handbook/ARINC_429_Commentary.pdf.

Secretary of the Air Force. Remanence Security. AFSSI 8580. 17 November 2008. May be superseded by update. Available at http://www.altus.af.mil/shared/media/document/AFD-111108-041.pdf.

T. J. Hill. "An enhanced, constant envelope, interoperable shaped offset QPSK (SOQPSK) waveform for improved spectral efficiency." Paper presented during 36th Annual International Telemetering Conference, San Diego, CA. October 23-26, 2000.

United Sensor Corp. Pitot-Static - Properties and Characteristics. http://www.unitedsensorcorp.com/pitot-properties.html. Last viewed 23 January 2013.

References

Advanced Photonix Inc. corporate website. http://www.advancedphotonix.com/.

Advisory Group for Aerospace Research & Development. Analogue Signal Conditioning for Flight Test Instrumentation. AGARD-AG-160-Vol.17. April 1986. May be superseded by update. Available at http://www.dtic.mil/dtic/tr/fulltext/u2/a171303.pdf.

———. Basic Principles of Flight Test Instrumentation Engineering. AGARD-AG-160 Vol.1 (Issue 2). March 1994. May be superseded by update. Available at http://www.dtic.mil/dtic/tr/fulltext/u2/a296880.pdf.

———. Digital Signal Conditioning for Flight Test. AGARD-AG-160 Vol.19. June 1991. May be superseded by update. Available at http://www.dtic.mil/dtic/tr/fulltext/u2/a240140.pdf.

———. Practical Aspects of Instrumentation System Installation. AGARD-AG-16 Vol.13. September 1981. May be superseded by update. Available at http://www.dtic.mil/dtic/tr/fulltext/u2/a107355.pdf.

Alan V. Oppenheim and Ronald W. Schafer. *Discrete-time Signal Processing*. Montreal: Prentice Hall, 2010.

Alfred N. Brower. "Digital Wideband Recording Systems." Paper presented at 37th Annual International Telemetering Conference, Las Vegas, NV, October 2001.

Alfredo J. Berard, Joe Lloyd, and Marck Buckley. "Who Moved My Tape Recorder Flavored Cheese." Paper presented at 38th Annual International Telemetering Conference, San Diego, CA, October 2002.

American Aerospace Controls corporate website. http://a-a-c.com.

American National Standards Institute and National Conference of Standards Laboratories. *American National Standard for Calibration: Requirements for the Calibration of Measuring and Test Equipment*. Boulder: NCSL International, 2006.

BEI Sensors corporate website. http://www.beisensors.com/index.html.

Bela Liptak and Kriszta Venczel, eds. *Instrument Engineers' Handbook Volume 1: Process Measurement and Analysis*. 4th edition. Boca Raton: CRC Press, 2003.

C. M. Harris and A. G. Piersol, eds. *Shock and Vibration Handbook*. 5th edition. New York: McGraw-Hill, 2002.

Charles C. Perry and Herbert R. Lissner. *The Strain Gage Primer*. 2nd edition. New York: McGraw-Hill, 1962.

Charles Wright. *Applied Measurement Engineering*. Englewood Cliffs: Prentice Hall, 1995.

Data Device Corporation. Synchro/Resolver Conversion Handbook. 4th edition. 1994. May be superseded by update. Available at http://www.ddc-web.com/documents/synhdbk.pdf.

David Banaszak. "End-to-End Mechanical Calibration of Strain Channels in Dynamic Health Monitoring Systems." Paper presented at 47th Annual Technical Meeting and Exposition of Istitute of Environmental Sciences and Technology, Phoenix, AZ, April 2001.

———. Frequency Response Evaluation of Multiple Accelerometers Using a Model Data Acquisition System. AFWAL-TM-87-195. January 1988. Available at http://www.dtic.mil/dtic/tr/fulltext/u2/a409915.pdf.

Department of the Army. Army Test, Measurement, and Diagnostic Equipment. AR 750-43. 3 November 2006. May be superseded by update. Available at http://www.apd.army.mil/pdffiles/r750_43.pdf.

Department of Defense. Aircraft Internal Time Division Command/Response Multiplex Data Bus. MIL-STD-1553B. 30 April 1975. May be superseded by update. Available at http://quicksearch.dla.mil/basic_profile.cfm?ident_number=36973&method=basic.

———. Calibration and Measurement Requirements. MIL-STD-1839. 12 May 2010. May be superseded by update. Available at http://quicksearch.dla.mil/basic_profile.cfm?ident_number=67317&method=basic.

———. Listing of Specifications and Standards Mandated for use by the Department of Defense by Public Laws or Government Regulations. SD-21. November 2012. May be superseded by update. Available at http://quicksearch.dla.mil/basic_profile.cfm?ident_number=212798.

Department of the Navy. Electric Power Equipment Basic Requirements. MIL-E-917E. 6 August 1993. May be superseded by update. Available at http://www.everyspec.com/MIL-SPECS/MIL-SPECS-MIL-E/MIL-E-917E_10341/.

Douglas Considine, ed. *Encyclopedia of Instrumentation and Control*. Huntington: R.E. Krieger, 1981.

Ed Ramsden. Interfacing Sensors and Signal Processing Components in *Sensors* Magazine, May 1998. Available at http://archives.sensorsmag.com/articles/0598/sig0598/index.htm.

Edward E. Herceg. *Handbook of Measurement and Control: an Authoritative Treatise on the Theory and Application of the LVDT*. Pennsauken: Schaevitz Engineering, 1976.

efunda corporate website. http://www.efunda.com.

Ferrel G. Stremler. *Introduction to Communication Systems*. 3rd edition. Reading: Addision-Wesley, 1992.

Frank J. Oliver. *Practical Instrumentation Transducers*. New York: Hayden Book Co., 1971.

Frequency Devices, Inc. Design Guide. August 2003. May be superseded by update. Available at http://www.freqdev.com/guide/index.html.

General Services Administration Information Technology Service. Telecommunications: Glossary of Telecommunication Terms. Federal Standard 1037C. 7 August 1998. May be superseded by update. Available at http://www.its.bldrdoc.gov/fs-1037/fs-1037c.htm.

Harry N. Norton. *Handbook of Transducers*. Englewood Cliffs: Prentice Hall, 1989.

Henry W. Ott. *Electromagnetic Compatibility Engineering*. Hoboken: John Wiley and Sons, 2009.

Ian R. Sinclair. *Sensors and Transducers*. 3rd edition. Oxford: Newnes, 2003.

International Electrotechnical Commission and International Organization for Standardization. *General Requirements for the Competence of Testing and Calibration Laboratories*. ISO/IEC 17025-2005. Geneva: International Organization of Standardization, 2005.

John Doble. *Introduction to Radio Propagation for Fixed and Mobile Communications*. Boston: Artech House, 1996.

John M. Howard. "The Application of Disk Recording Technology to Platform Data Capture and Analysis." Paper presented at the 39th Annual International Telemetering Conference, Las Vegas, NV, October 2003.

Karl F. Anderson. The Constant Current Loop: A New Paradigm for Resistance Signal Conditioning. NASA Technical Memorandum 104260. October 1992. May be superseded by update. Available at http://www.nasa.gov/centers/dryden/pdf/88277main_H-1861.pdf.

Macro Sensors corporate website. http://macrosensors.com.

Mark Geoghegan. "Optical Linear Detecton of SOQPSK." Paper presented at the 38th Annual International Telemetering Conference, San Diego, CA, October 2002.

Michael Rice and Adam Davis. "A Wideband Channel Model for Aeronautical Telemetry." Paper presented at the 38th Annual International Telemetering Conference, San Diego, CA, October 2002.

Moog Crossbow corporate website. http://xbow.com.

National Aeronautics and Space Administration. Metrology - Calibration and Measurement Processes Guidelines. NASA Reference Publication 1342. June 1994. May be superseded by update. Available at http://www.hq.nasa.gov/office/codeq/doctree/NASA_RP1342.pdf.

National Conference of Standards Laboratories. *Establishment and Adjustment of Calibration Intervals*. RP-1. Boulder: National Conference of Standards Laboratories, 2010.

National Instruments. Measuring Strain with Strain Gages. 28 September 2012. May be superseded by update. Available at http://www.ni.com/white-paper/3642/en.

———. Signal Conditioning Tutorial. May be superseded by update. Available at http://www.ni.com/pdf/features/sigcontut.pdf.

Ofer Tsur. "Rugged and Reliable COTS Storage Solutions for Data Acquisition Systems" Paper presented at the 39th Annual International Telemetering Conference, Las Vegas, NV, October 2003.

Omega Engineering. Practical Strain Gage Measurements. Available at http://www.omega.com/techref/pdf/StrainGage_Measurement.pdf.

———. *The Omega Complete Temperature Measurement Handbook and Encyclopedia*. Available at http://www.omega.com/literature/litdownload.html.

Pacific Scientific-OECO corporate website. http://fwbell.com.

Patrick L. Walter. *The Handbook of Dynamic Force, Pressure and Acceleration Measurement*. San Juan Capistrano: Endevco Corp, 2001.

Peter K. Stein. "A Unified Approach to Handling of Noise In Measurement Systems" in *Flight Test Instrumentation* Advisory Group for Aerospace Research and Development Lecture Series 50 (Neuilly-sur-Seine: North Atlantic Treaty Organization, 1972).

———. Pyroshock, Impact, Explosions and Other High-Speed Transients: Some Thoughts on "TQM" - Total Quality Measurements. Presented during 17th Transducer Workshop, 22-24 June 1993.

———. The Response of Transducers to Their Environment, the Problem of Signals and Noise. Presented during the 6th Transducer Workshop, 22-24 October 1969.

Ralph Morrison. *Grounding and Shielding: Circuits and Interference*. Hoboken: John Wiley and Sons, 2007.

Range Commanders Council. Digital Data Acquisition and On-Board Recording Standard. IRIG Standard 107-98. Rescinded; no longer available.

RDP corporate website. http://www.rdpelectrosense.com.

Robert G. Irvine. *Operational Amplifiers Characteristics and Applications*. 3rd edition. Englewood Cliffs: Prentice Hall, 1994.

Secretary of the Air Force. Air Force Metrology and Calibration (AFMETCAL) Management. AFI 21-113. 12 November 2008. May be superseded by update. Available at http://www.robins.af.mil/shared/media/document/AFD-090827-025.pdf.

Sentech Inc corporate website. http://www.sentechlvdt.com.

Simon M. Sze and Kwok K. Ng. *Physics of Semiconductor Devices*. Hoboken: John Wiley and Sons, 2007.

SpaceAge Control corporate website. http://spaceagecontrol.com.

Steven W. Smith. *Digital Signal Processing: a Practical guide for Engineers and Scientists*. Boston: Newnes, 2003.

Terry Mason, Fred Thames Jr., and John Howard. "'New Technology' Data Recorders: A Technology Overview." Paper presented at the 37th Annaul International Telemetering Conference, Las Vegas, NV, October 2001.

Tom Van Doren. *Grounding and Shielding of Electronic Systems* (Rolla, MO: Missouri University of Science and Technology). Video presentation, 15 hours.

Vishay Precision Group. Shunt Calibration of Strain Gage Instrumentation. Tech Note TN-514. 1 November 2010. May be superseded by update. Available at http://www.vishaypg.com/docs/11064/tn514tn5.pdf.

Vishay Precision Group corporate website. http://www.vishaypg.com.

W. T. Tsang. *Semiconductors and Semimetals Vol. 22, Lightwave Communications Technology*. Orlando: Academic Press, 1985.

****** End of Document ******