The Advanced Subminiature Telemetry (ASMT) System

A Wireless, Network Based, Non-Intrusive Instrumentation System

Steve Musteric
46th Test Systems Squadron (46TSSQ)
(850) 883-7685
steven.musteric@eglin.af.mil
17 Jun 2008

Outline

- ASMT System Concept
- Current Project
  - System Description
  - Test Results To Date
- Summary

ASMT System Concept

Operating Environments

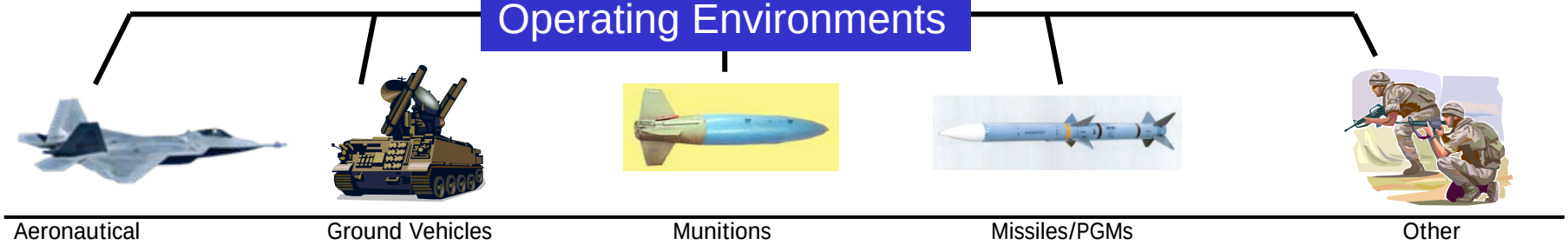

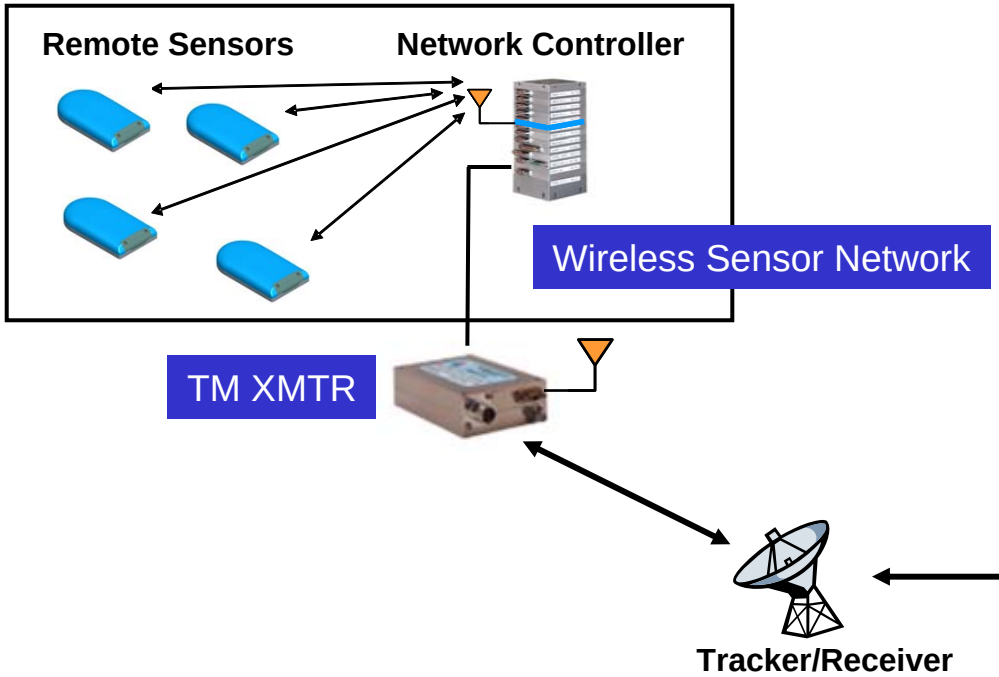

Parameters Measured

- Vibration
- Acoustics
- TSPI
- Pressure
- Temperature
- Strain

ASMT System Concept

Key Features

- Wireless, network based system
- Non-intrusive installation, easy removal of sensors
- Bit error correction, re-transmit capability
- Reconfiguration capability from ground station
- Variety of remote sensors
- Miniaturized COTS based components
- Standard commercial communication protocol

ASMT Initial Test Capability Project

ASMT Initial Test Capability Project

Overview

- **Project Initiated in Nov 05**
  - $840K made available with help of Eglin Senior Leadership
  - 46 TW directed to develop initial system for airborne use
  - Awarded contract to Teletronics Technology Corporation (TTC)
- **Project Goals**
  - Implement wireless, non-intrusive, network based instrumentation
  - Evaluate data quality by comparing to legacy wired system
- **Application**
  - Due to limited funds, chose F-16 flutter application
    - Manageable data throughput
    - Sensor size less of an issue
    - Real need existed within 46TW

ASMT Initial Test Capability Project

System Hardware

Wireless Sensors optimized to measure low frequency vibration response (0-50Hz)

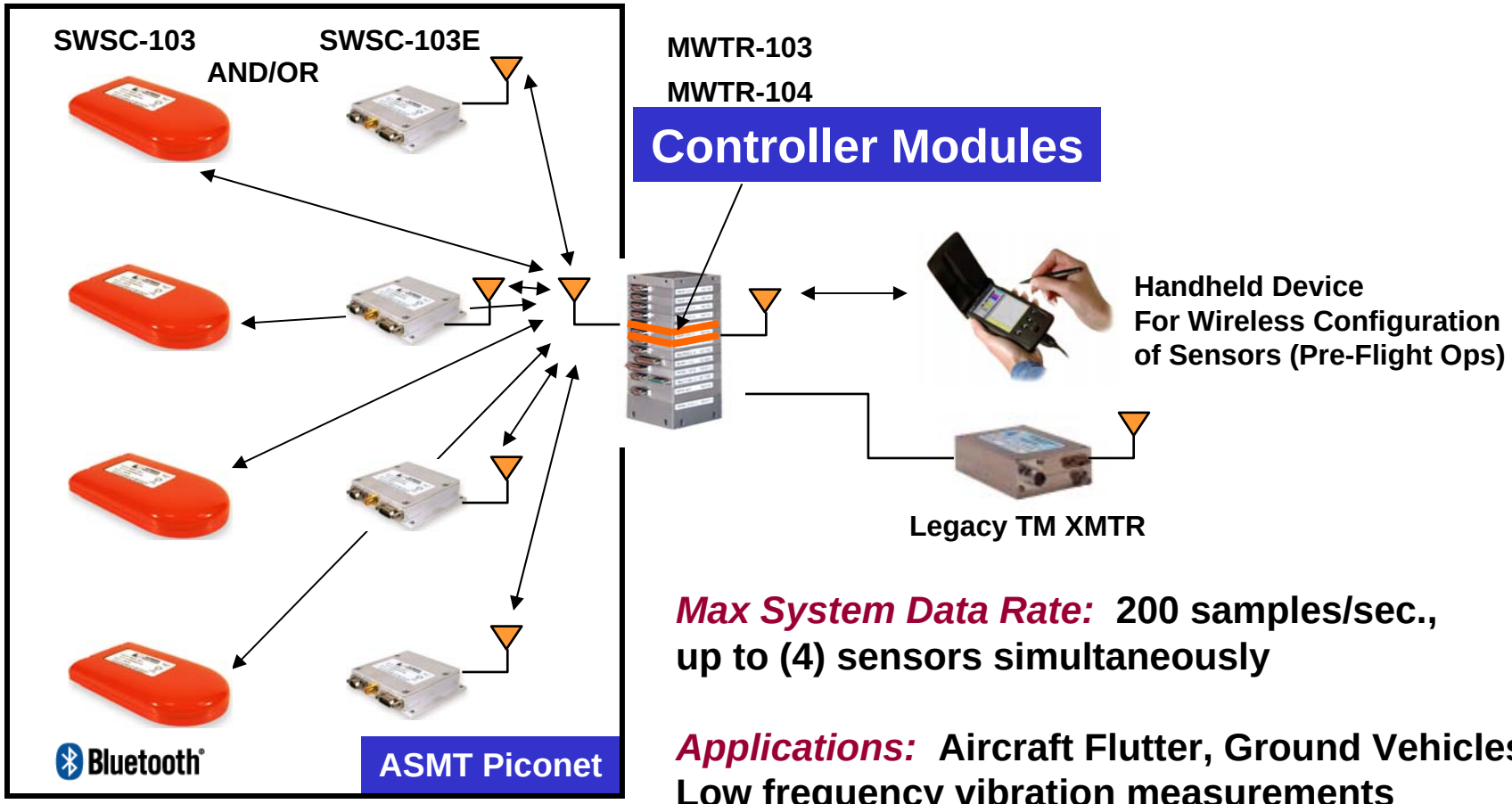

Max System Data Rate: **200 samples/sec., up to (4) sensors simultaneously**

Applications: **Aircraft Flutter, Ground Vehicles**
Low frequency vibration measurements

Remote Sensors

Two Types

- **SWSC-103:** internal transducers, self-contained battery, Bluetooth transceiver, and internal antenna

This is the classic ASMT sensor concept

- **SWSC-103E:** external transducer, 28 VDC power, and external antenna

SWSC-103

SWSC-103E

SWSC-103 Remote Sensor
Component Details

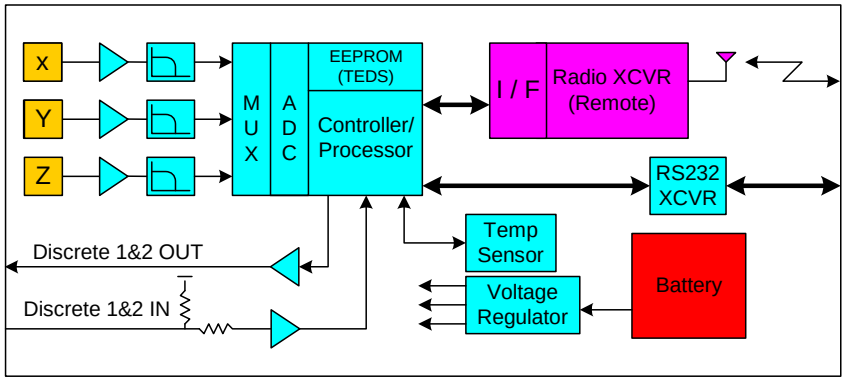

Characteristics:

- External installation on test article (electro-cleavable adhesive)
- Built-in triaxial MEMS accelerometer transducers, temp sensor
- Internal battery (up to 4 hrs of airborne use)
- Built-in wireless Bluetooth radio and antenna
- Signal conditioning, DSP filtering, programmable filter/gain/offset/TEDs/sampling rate
- Size: 2.6” x 4.623” x 0.69”

SWSC-103 Sensor
Transducer Details

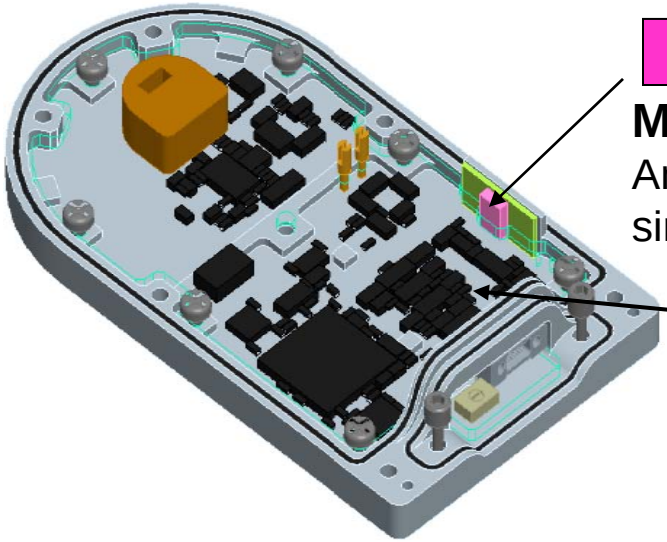

Single (z) axis MEMS accelerometer
Analog Devices AD22280-R2 +/-50 g, single-axis, ADXL-78 series

Location of two axis (x,y) MEMS accelerometer
Analog Devices AD22285-R2 +/-50 g, dual-axis, ADXL-278 series

Transducer Features:

- Programmable gain allows for a range of +/-5 g to +/-50 g full-scale acceleration range
- Calibrated accelerometer accuracy of +/-0.1 percent of full-scale range Devices operate from a single +5V supply
- No separate excitation circuit required

SWSC-103E Sensor
Transducer Details

- External tri-axial accelerometer (Kistler #8792 M 04 non TEDS unit)
- SWSC-103E is compatible with many tri-axial accelerometers including
  - PCB Piezotronics TEDS Models: YJT356A17, 333B30, 333B31
  - Kistler TEDS Models: 8632C50T, 8690C50T, 8632C10T
- Incorporates TEDS interface as per IEEE-1451
  - Interface is read only –no write capability
- SWSC-103E has no internal power source – uses 28 VDC from aircraft
- Bluetooth antenna is external to sensor unit

Network Controller
Component Details

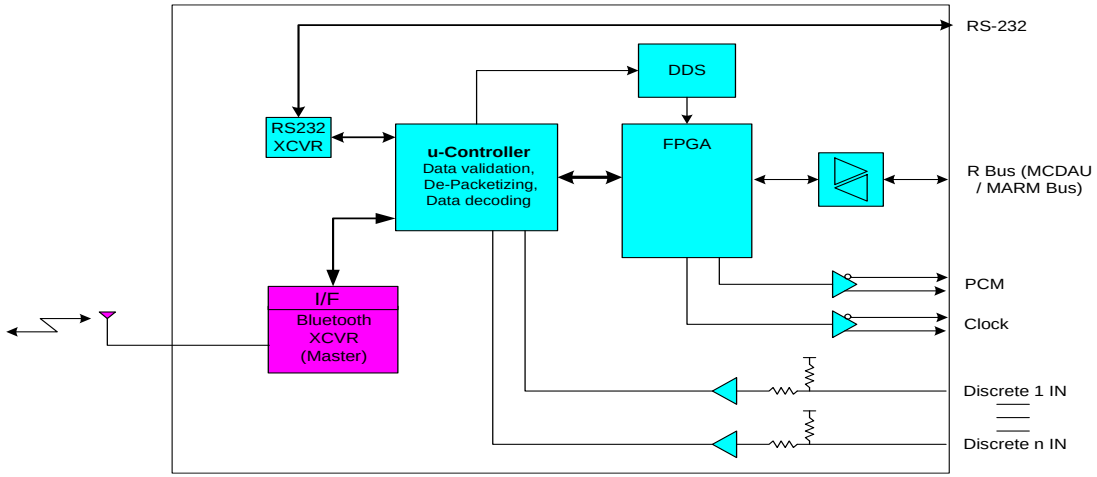

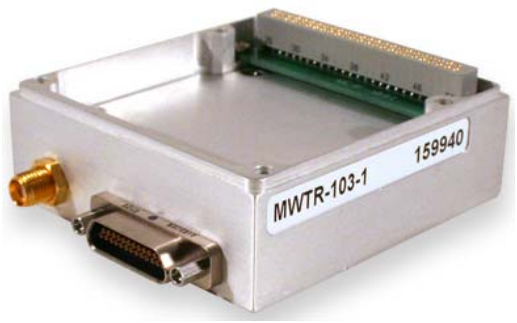

- Wireless controller provides bi-directional communication link to multiple remote sensor modules.
  - Collects data from up to four remote sensor modules and merges ASMT sensor data with existing instrumentation data
  - Provides programming capability with sensor modules
  - Initiates calibration commands to sensor modules
  - Provides time to sensor modules
  - Size: 2.5” x 2.6” x 0.8”

Non-Intrusive Installation
Remote Sensors

- **Electro-cleavable Adhesive (EIC Laboratories, www.eiclabs.com)**
  - ElectRelease™M70 two-part epoxy for use on conductive or non-conductive surfaces
  - Physical properties allow for electrical de-bonding, easy removal of sensors

This adhesive is key to the non-intrusive installation and easy removal of ASMT sensors

Test Results to Date

- **Laboratory/Field Tests at TTC**
  - RF Link Reliability
  - Susceptibility to RF Interference
- **Environmental Testing**
  - Adhesive Bond Strength
  - Sensor Qualification Tests
  - Sensor Calibration Tests
- **Aircraft Testing (on Ground)**
  - T-2 Modification Checkout
  - EMC/EMI Safety of Flight Ground Test

Lab Tests at TTC

Susceptibility testing performed in EMI chamber

- Tested horizontally polarized blade antennae and "D-puck" antenna (used in SWSC-103 sensor)
- "Interfering" signal output in upper S-band via vertically polarized antenna

Results very favorable: No RF interference detected

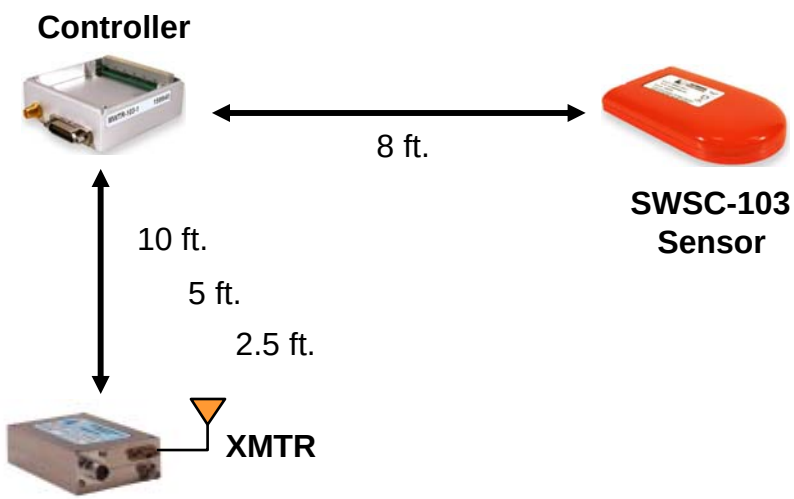

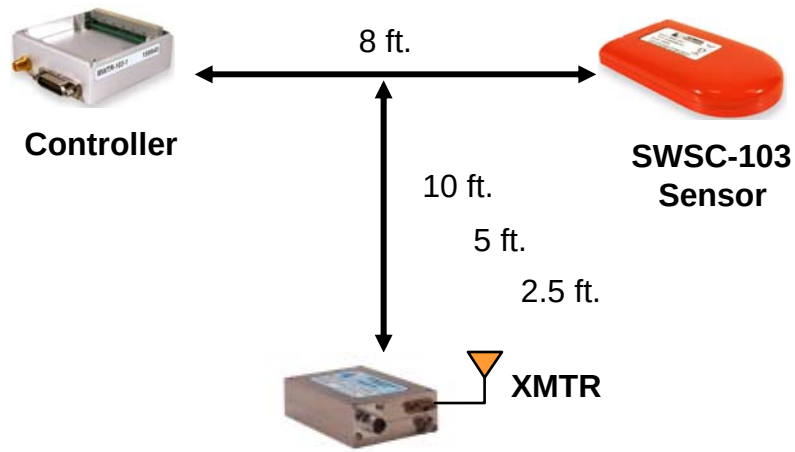

Adhesive Bond Strength Testing

- Tests conducted using 10 simulated sensor units
  - Identical surface area, size as SWSC-103
  - Units machined from 6061T6 aluminum
- MIL-STD-810E used as a guide
  - Initial pull tests (500 lbs. tensile, 1500 lbs. shear)
  - Temperature Shock
  - Shock*
  - Humidity
  - Vibration
  - Acceleration
  - Fluid Immersion, Salt Fog*
  - Final Pull Tests (to failure)

* - Followed immediately by pull tests

Adhesive Bond Strength Testing

Results – Final Pull Test to Failure

Simulator Block #	Adhesive Type	Direction of Pull	Pull Force at Failure (Pounds)
2	Patch	Tensile	1,942
3	Patch	Tensile	2,200-2,300
5	Patch	Tensile	1,716
9	No patch	Tensile	2,219
10	No patch	Tensile	2,010
1	Patch	Shear	3,515
4	Patch	Shear	**3,109**
6	No patch	Shear	3,205
7	No patch	Shear	3,852
8	No patch	Shear	3,412

Factor of Safety = 3109 lbs. / 21.36* lbs. = **145**

* - Mach 0.95 at sea level yields aerodynamic pressure (*q*) of 9.8 lbs./in^2. Presented surface area of sensor = 2.18 in^2

Adhesive Bond Strength Testing

Pull Test Set-Ups

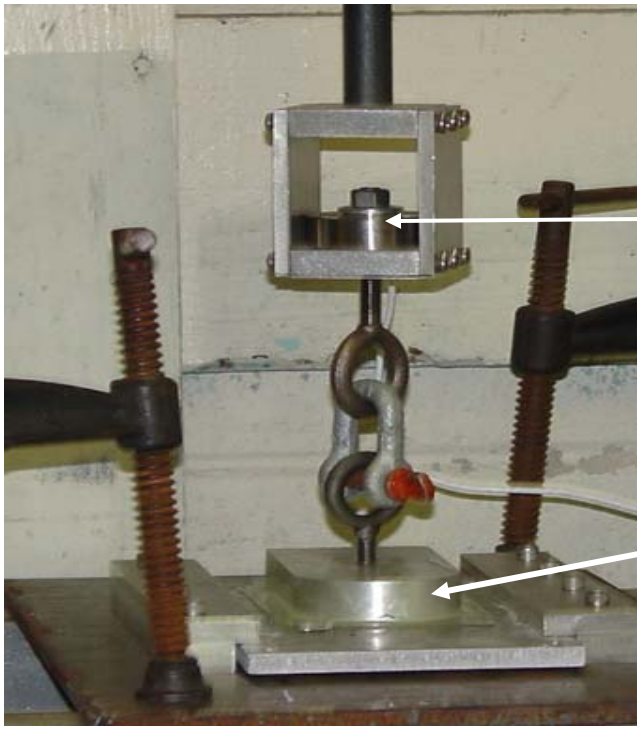

Tensile Test

Shear Test

Adhesive Bond Strength Testing

Conductivity Evaluation

- **Purpose: Minimize risk of inadvertent de-bonding due to high voltage discharge**
  - Evaluate use of conductive silver epoxy in conjunction with ElectRelease™M70
  - Conduct temperature/conductivity checks
- **Procedures:**
  - Initial impedance measurements taken on simulated sensors (1.15MΩ - 2.06MΩ observed)
  - TIGA 920H silver conductive epoxy applied (0.4Ω observed)
  - Temperature Cycling (-40°C, -20°C, 0, +35°C, +72°C)
    - 1 amp of current passed through samples, 28v applied
  - Impedance unchanged after temperature cycling (0.4Ω)
  - Final Pull Tests (to failure): fixture failed @ 3100 lbs. (shear)
  - **Adhesive Bonds did not fail**

Adhesive Bond Strength Testing

Conductivity Evaluation (cont'd)

ElectRelease™M70 Adhesive

TIGA 920H Silver Conductive Epoxy

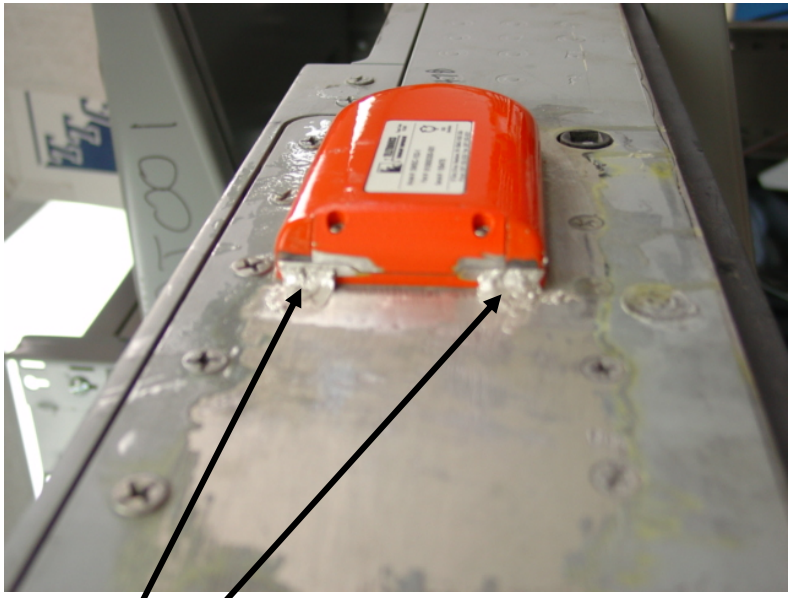

On actual sensors, two beads of silver epoxy will be used to achieve equivalent bond surface area

Sensor Qualification Testing

Test Summary

- MIL-STD-810E Procedures Used:
  - Cold Soak @ -20°C (2 hrs.)*
  - Heat Soak @ +70°C (2 hrs.)*
  - Heat Soak/Humidity (24/48 hrs.)
  - Shock (15g, 5ms pulse in vertical, longitudinal axes) x 3*
  - Cold Soak @ -20°C (4 hrs.)*
  - Shock (15g, 5ms pulse in vertical, longitudinal axes) x 3*
  - Acceleration (vertical axis = 4.5g, 78 RPM, 1 min.; longitudinal axis = 3.0g, 65 RPM, 1 min.)*

* - Followed immediately by vibration/sensor functional tests

Sensor Qualification Testing

Test Set-Up

Vibration

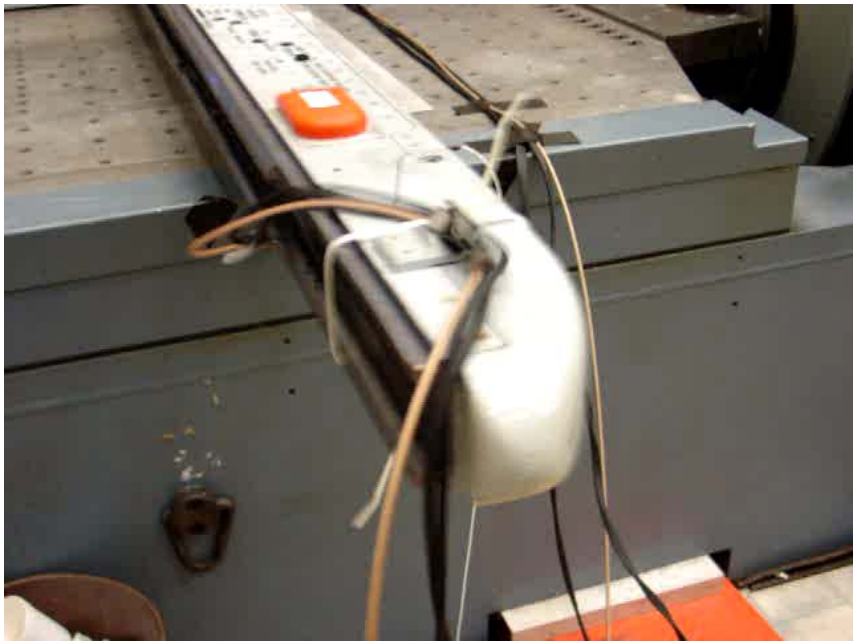

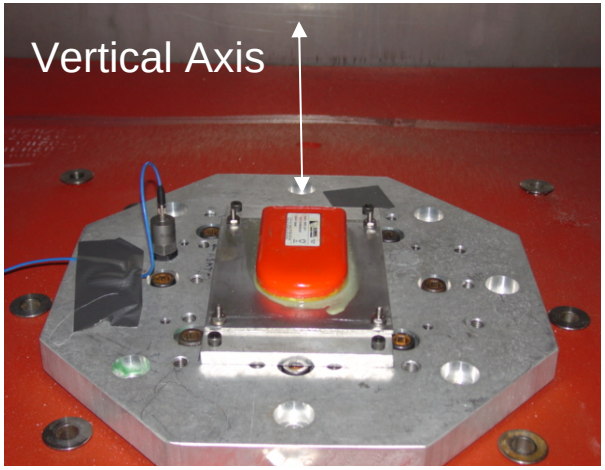

Shock

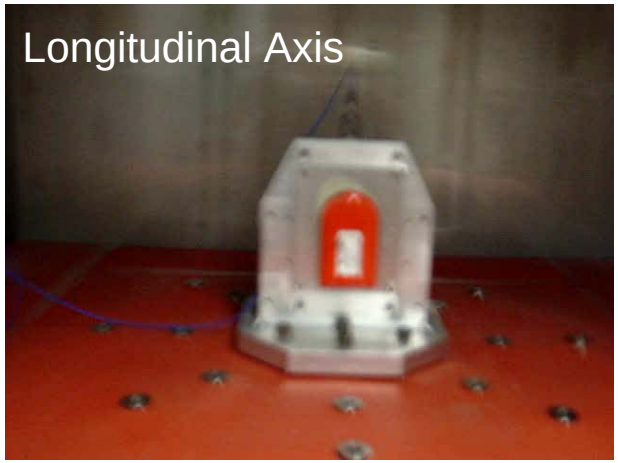

Sensor Qualification/Calibration Test Observations

Qualification Tests

- Sensor Units Functioned Reliably Throughout Test Series
  - Battery Voltage
  - Accelerometer Data
  - RF Link

Calibration Tests

- ASMT sensor data correlated well with legacy wired system
  - Mean observed network latency: ~ 20 ms (87.7 ms max)
  - Max allowable latency = 100 ms

T-2 Modification Checkout

- **EMC/EMI Safety of Flight Ground Test**
  - ASMT system did not interfere w/aircraft systems
  - ASMT system operation unaffected by EMI sources
- **RF Link Reliability**
  - Stations 1,2: Sensors and controller linked reliably
  - Stations 8,9: RF link less reliable
- **Telemetry Link**
  - Data successfully transmitted to control room
  - Latencies within acceptable range

Ground / Flight Test Configuration

Aircraft Configuration specified by the Air Force SEEK EAGLE Office

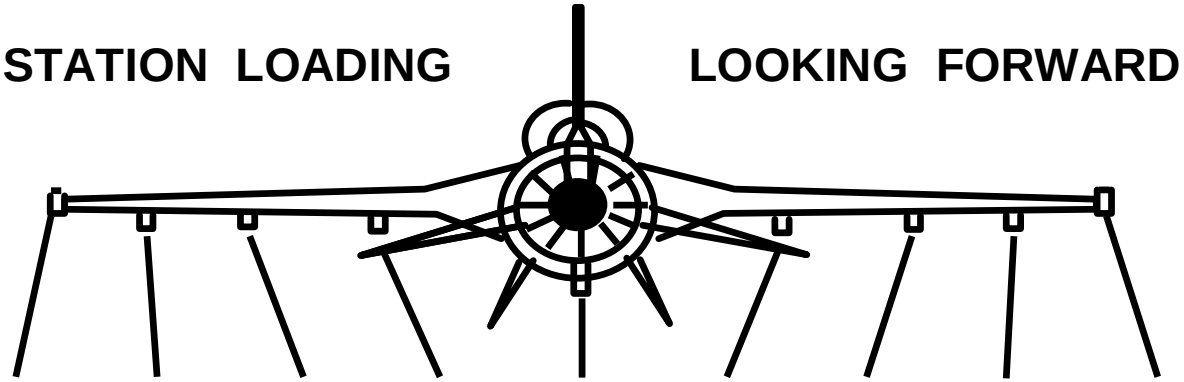

	1	2	3	4	5	6	7	8	9
Suspension Equipment	LAU-129	16S350 LAU-129	16S1700				16S1700	16S350 LAU-129	LAU-129
Store	N/A	JRIP	N/A	370	300	370	GBU-12	CATM-9L/M	N/A
ASMT Instrumentation				370	300 opt	370			

Ground / Flight Test Configuration

Flight Test - Summary

- **First flight test occurred on 24 Apr 08**
  - Flight Time Logged: 1.7 hrs.
  - Mission Type: F-16 flutter
  - Max Airspeed/Mach/Altitude: 550 KCAS/0.97M, 15k ft. MSL

- **Additional Mission Details**
  - Mission aborted due to chase aircraft malfunction
  - Legacy wired instrumentation failed on left side
  - 3 of 7 ASMT sensors did not connect with controller due to lack of line of sight
  - Adhesive bond not compromised
  - Sensor battery voltage “healthy” throughout mission

Summary

- **First ASMT system is ready to support T&E community**
  - Looking at other flight/ground test opportunities to measure low frequency vibration

- **Future Development Efforts**
  - Have identified specific needs throughout T&E community
  - Continue to seek funding to advance ASMT concept
    - Additional sensor types*
    - High Data rate applications

- **Benefits/Payoffs**
  - Implements wireless network based instrumentation
  - Stands to provide tremendous test flexibility/cost savings

* - temperature, strain, position, pressure, acoustics, TSPI