Design and Development of A Wireless Acceleration Sensor Chip

Navid Yazdi[1], John Plaga[2] ,
Robert Hower[1], Yafan Zhang[1], Ted Knox[2]

[1]Evigia Systems, Inc.

[2]Human Effectiveness Directorate, Air Force Research Laboratory

Twenty-Third Transducer Workshop

Buffalo, NY, June 17-18, 2008

Cleared for Public Release by WPAFB Public Affairs.
Disposition Date: 5/29/2008. Document Number WPAFB 08-3478

U.S. Effort To Protect The Troops Falls Short
Baltimore Sun, March 7, 2007

"Despite a determined DoD effort to protect troops from deadly roadside bombs, the toll in Iraq continues to rise, with at least 19 American servicemen killed in the past week when insurgents' bombs ripped their vehicles."

Background

- Traumatic Brain Injury (TBI) has been a major problem in OEF/OIF
  - Mild TBI often not diagnosed or misdiagnosed (PTSD)
- Limited data on correlation between blast exposure and brain injury
  - Unknown effects of direction of insult
- System is required to record blast that a soldier is exposed to and correlate against injury
- System can then be used to predict injury

Air Force SBIR

- AF06-044 Immunity from Threat Based on Measured Injury Causation
- Develop a new class of small sensors for routine wear by military, police & sports personnel that record the magnitude & duration of exposure to impact, electromagnetic radiation, blast waves & bullets. The particular focus should be on sensing energy from blast waves (e.g. from Improvised Explosives Devices) and bullets that accelerate the helmeted head to dangerous levels causing traumatic brain injury

Comparison of Features
5 Phase I SBIRs

- Size (mm^2): 9 – 1400+
- Sample Rate: Adaptive to 50 KHz per channel
- Max Range: 1000g – 10,000g
- Service Life: years - ∞
- 3 and 6 DOF
- Number of events recorded: 1 – 25+
- Duration of event recording: Adaptive to 2 seconds
- Estimated production cost (ea): $1's to $660

Phase II Award - Evigia Systems, Inc.

- *Ubiquitous embedded wireless blast energy sensors*
  - Small form factor (a few millimeters on a side)
  - Low cost (a few dollars)
  - Wide military deployment & high-volume civilian applications

Objective

- Development of miniature wireless acceleration sensor array ***chips*** that can record the magnitude and duration of exposure to impact and blast waves
  - Measure & store ***finite levels of acceleration*** and their ***duration***
  - Transmit data and reset through wireless interrogation
  - No external batteries; integrate on-chip electrical energy source

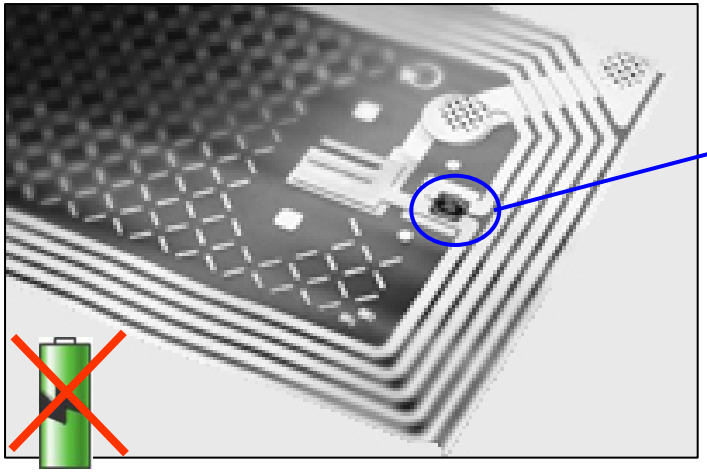

Sensor RFID Label

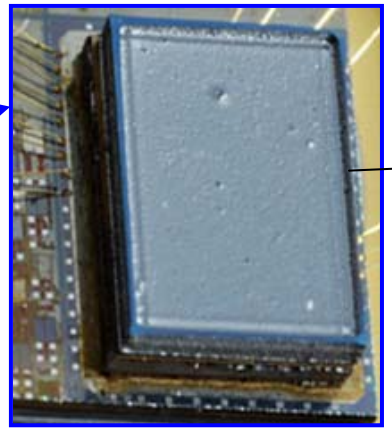

Micropackaged Sensor-Circuit Chip

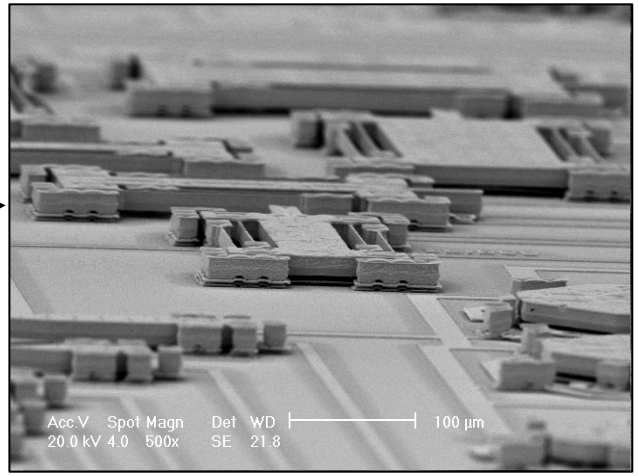

Acceleration Switch Array

Navid Yazdi

Evigia Systems, Inc.

Evigia Acceleration Event Sensor Array Chip

- Array of 6-DOF MEMS acceleration sense elements
- Self-powered with on-chip MEMS-based energy unit
- Electronic event detection and impact duration measurement
- Digital sense data storage
- Electronic reset
- Remote powered wireless data communication (similar to an “RFID”)

Wireless Batteryless Acceleration Event Microsensor Array Chip

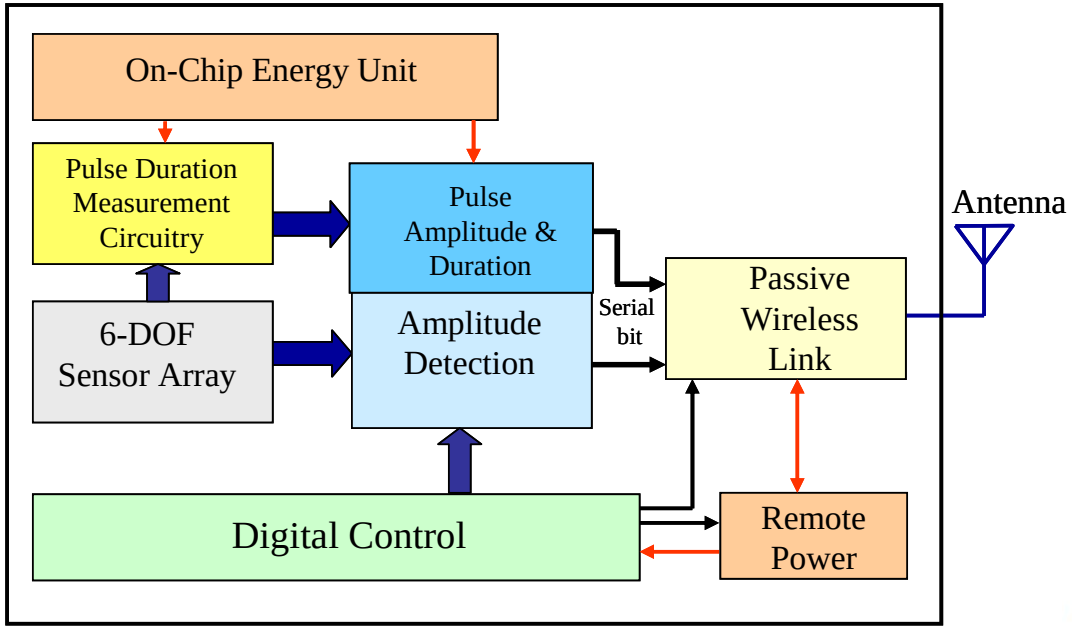

Signal Recording

- Each sensing element switches on for duration of exposure over element threshold level
- 18 levels for each of 6 degrees of freedom
  - 3 linear, 3 rotational
- The 18 threshold levels can be optimized for each axis
  - Increments need not be equal or linear

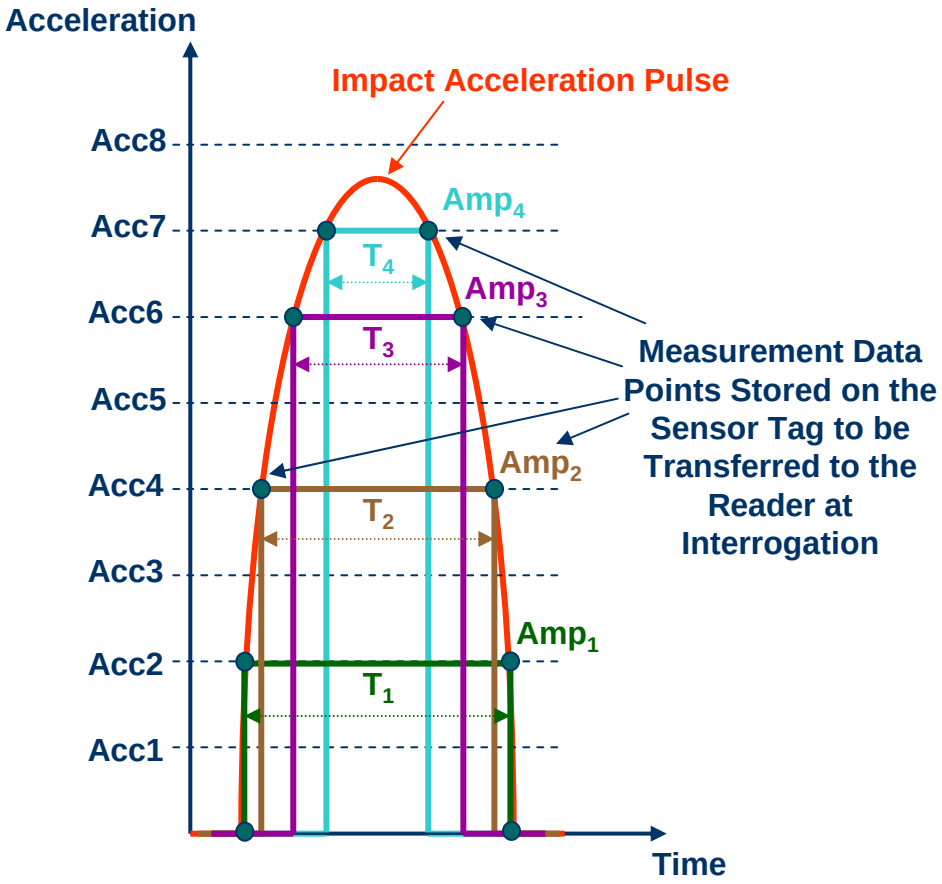

Multiple Blast Pulse Detection

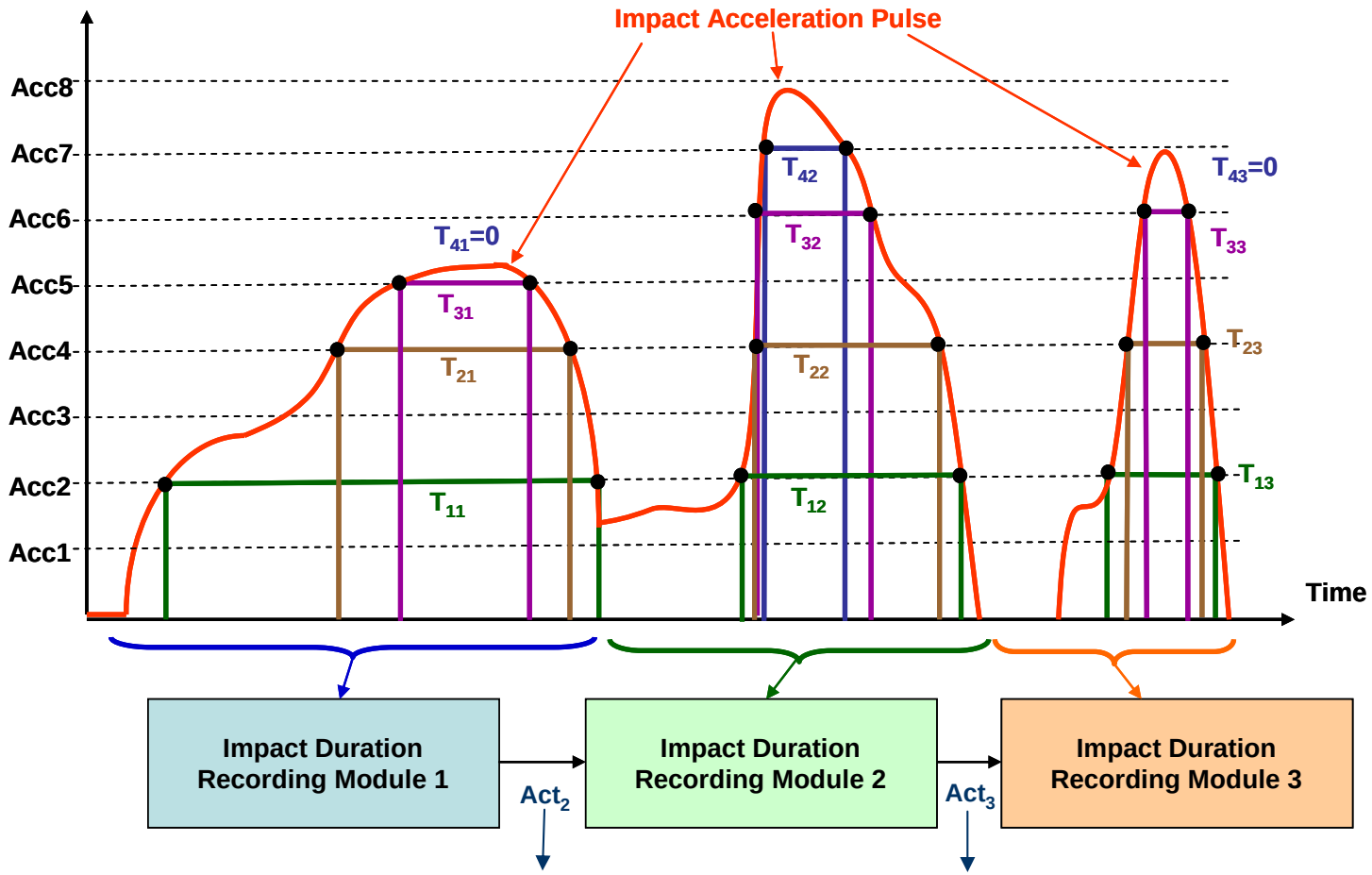

Act_i (Activation Control Bit): Each module sets this bit to allow operation of the next module. In this manner, consecutive measurements of multiple pulses enabled w/o burning unnecessary power or resetting the previous recordings.

Sensor Chip Target Specifications

Parameter	*Specification*
Measurement Axis	6 DOF (3-axis linear + 3-axis angular)
Range	10 – 1000g (linear + tangential linear) (300-30,000 rad/sec^2 with 1 foot radius)
Number of Sense Elements	100's
Impact Time Interval Measurement	0.3-300 mSec depending on the desired time resolution
Time resolution	Better than 12 bits (0.0244% of full-scale interval)
Size	3mm x 3mm x 0.7mm
weight	<0.1 gram
Data Retention (Post Event)	Months-Years
Data I/O & Data Collection After Blast	Wireless to External Interrogator, 13.56MHz
Wireless Range	3-10feet (depending on the sensor tag antenna)
Sensor Die Fab & Antenna Assembly Cost	$1's

Highly Programmable Impact Detection *Chip*

Specs can be tailored by design based on the application needs

Technology Components

MEMS-Based Chip-Scale Integrated Energy Unit

6-DOF MEMS Accelerometer Array

Ultra-low power circuit & system

Micro-packaged sensor-circuit chip

Highly Programmable Impact Detection *chip*:

Wide Range (Acceleration: g's to 1000 g)

Wide Time Interval (10's µSec-100's mSec)

Compact Size (3mm x 3mm)

Low cost ($1's)

Wireless link

Chip-scale wafer-level integration of system components

Compatible with mass volume manufacturing in MEMS & semiconductor foundries

6-DOF Acceleration Sense Element

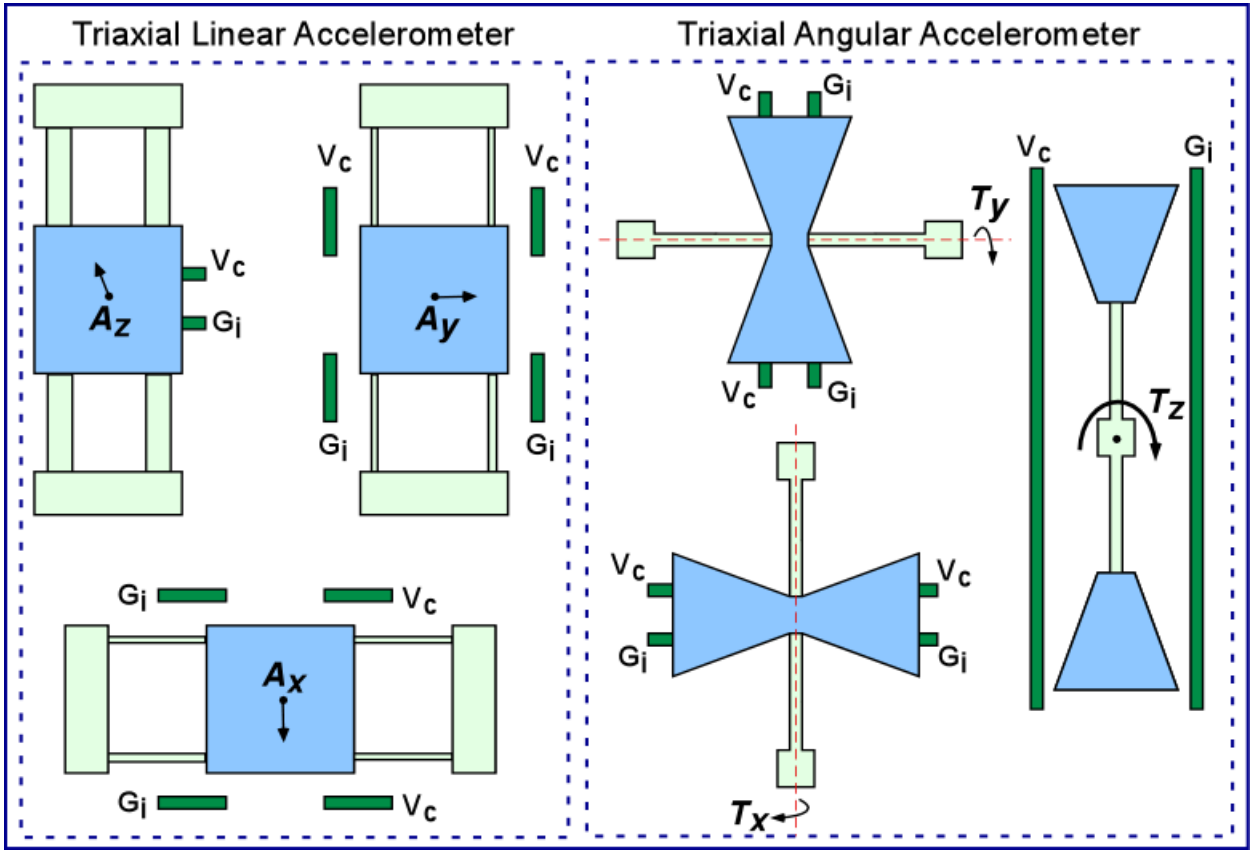

- Suspension geometrical design provides sensitivity to one primary axis
- Angular acceleration sensors sensitivity to linear input reduced by device structure design

X/Y-Axis Angular Accelerometer

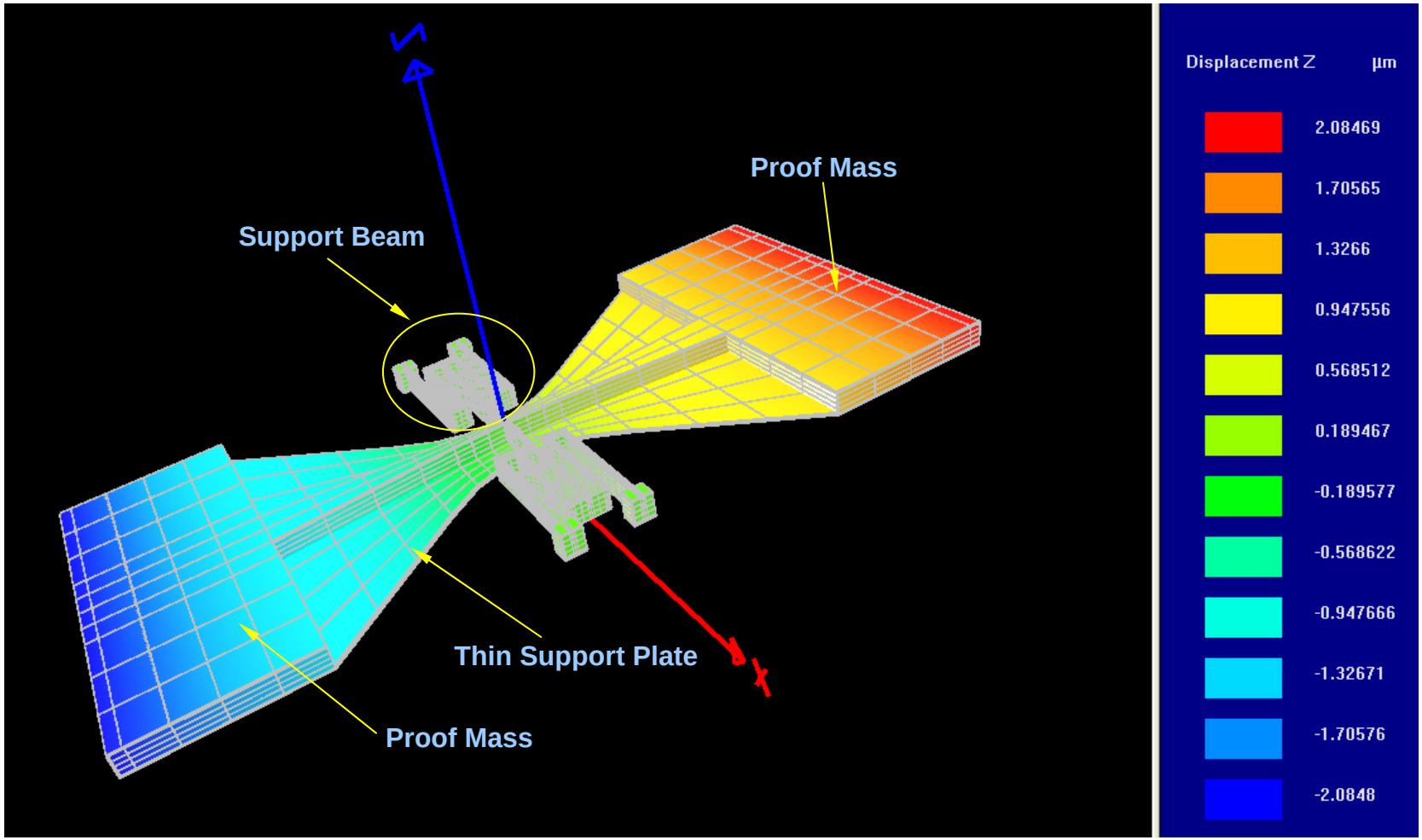

Z-Axis Angular Accelerometer

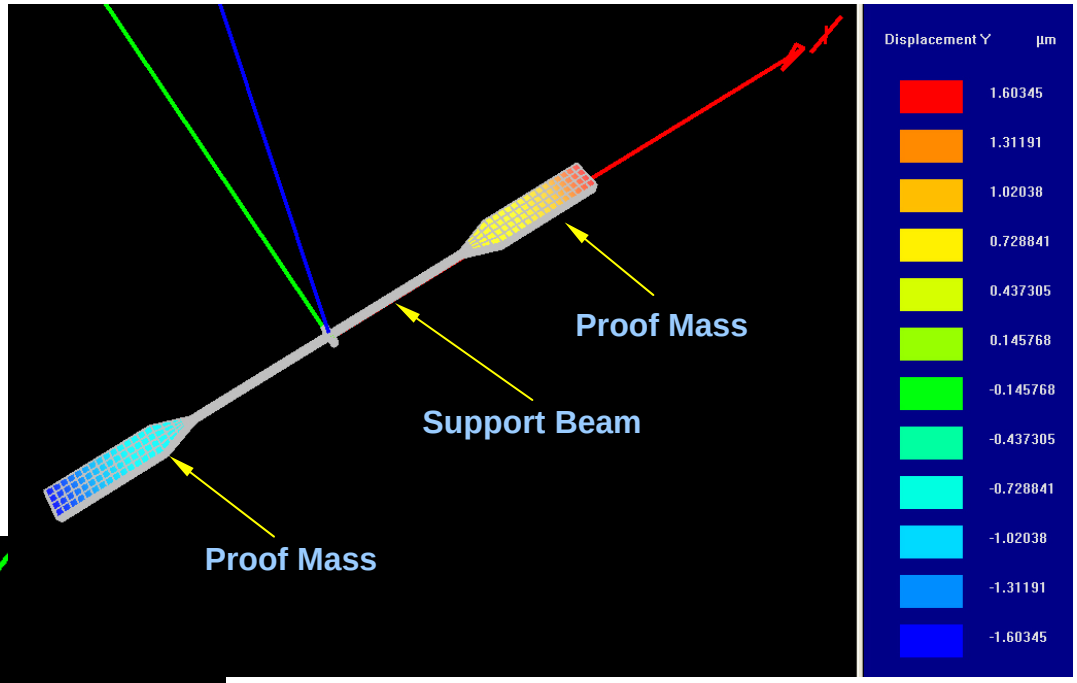

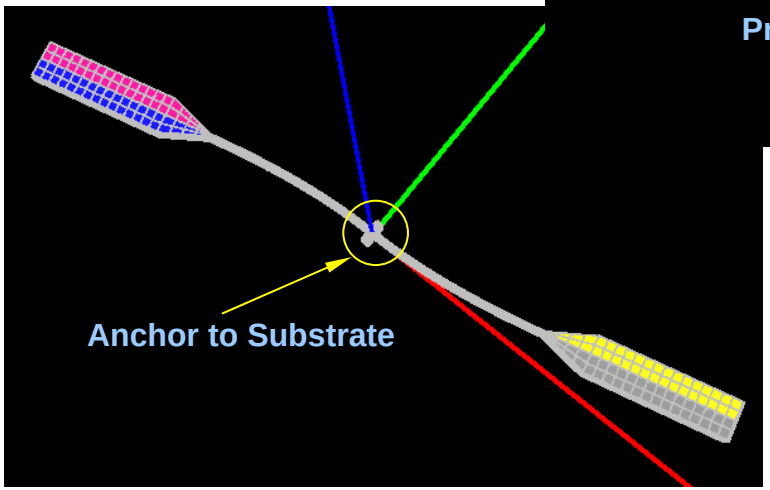

A15g-rotaional load is applied to the accelerometer. The proof mass rotates around the z-axis. The lateral movements at each end of the accelerometer is 1.6µm in opposite directions.

Z-Axis Linear (under 10g out-of-plane acceleration)

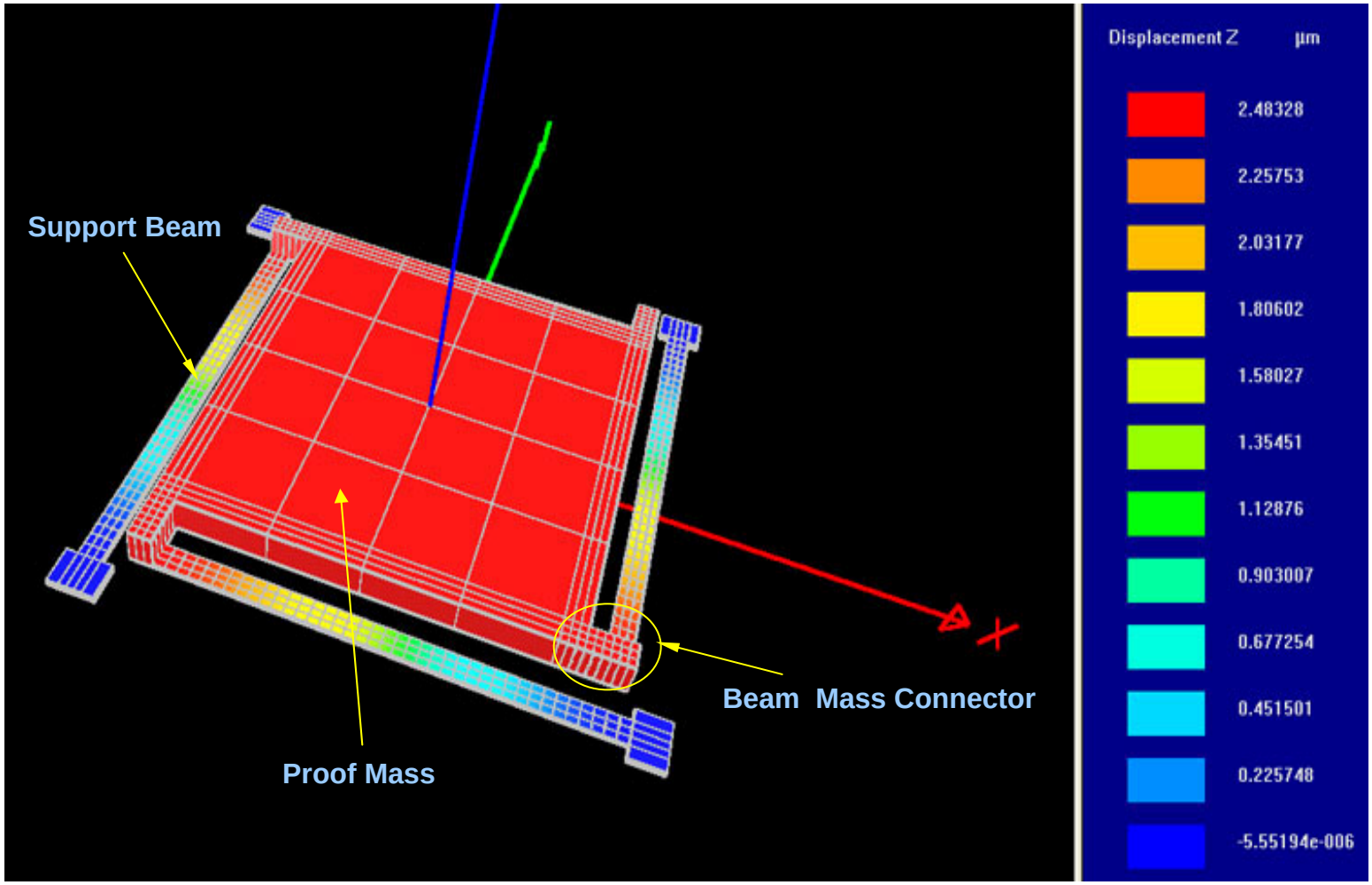

X/Y-Axis Linear Accelerometer under 15g (in y-axis)

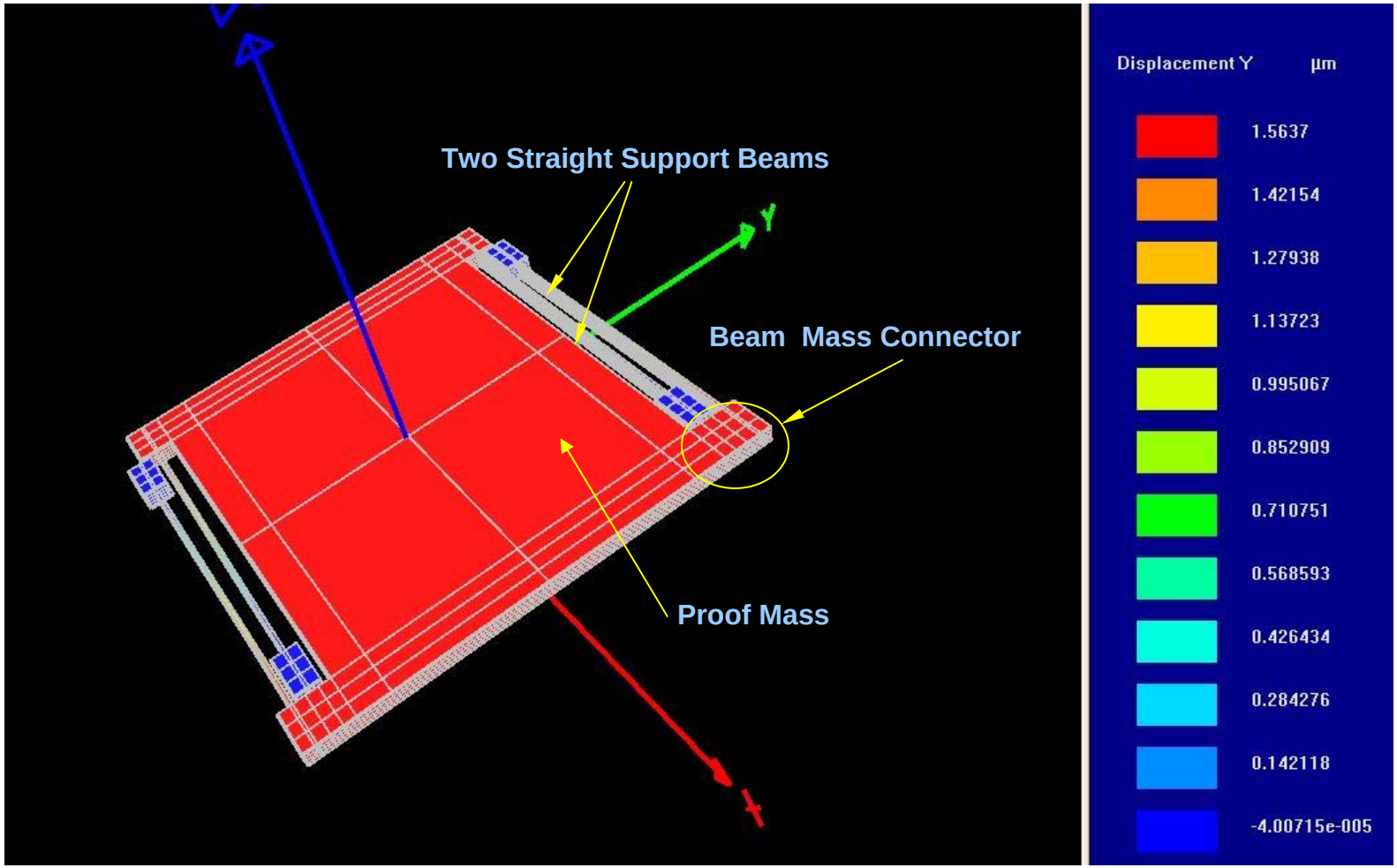

Fabricated Prototypes

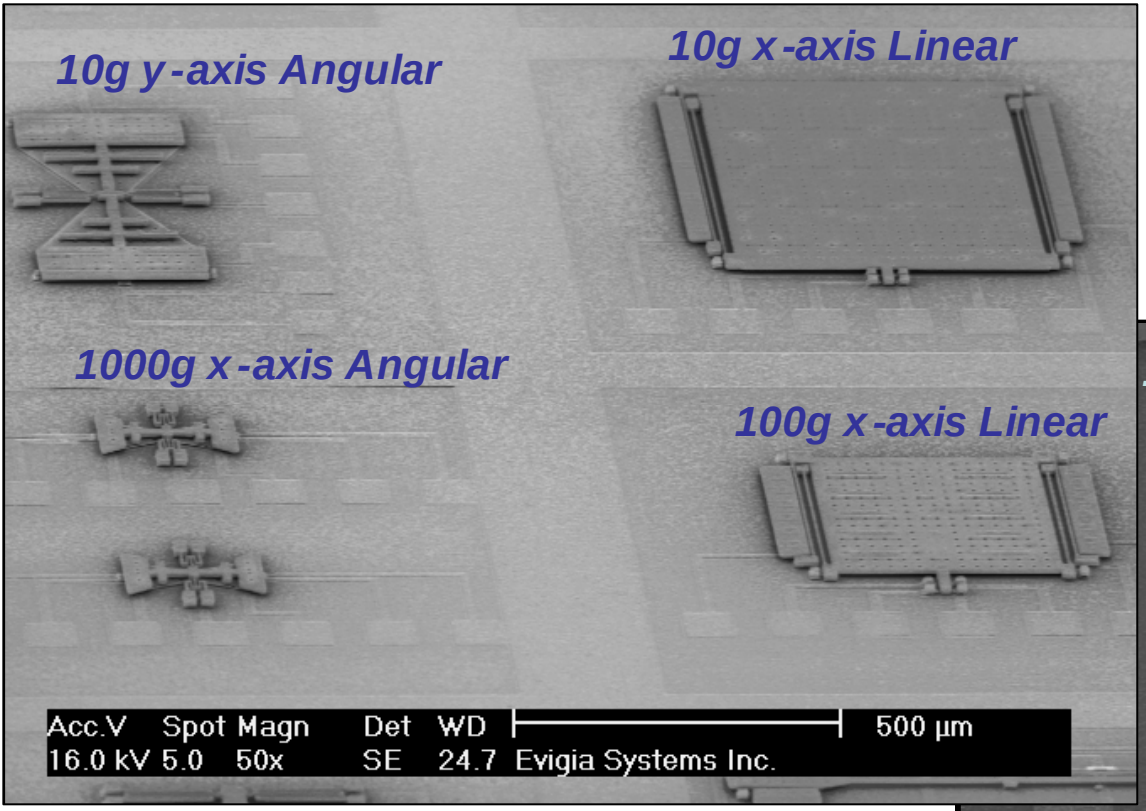

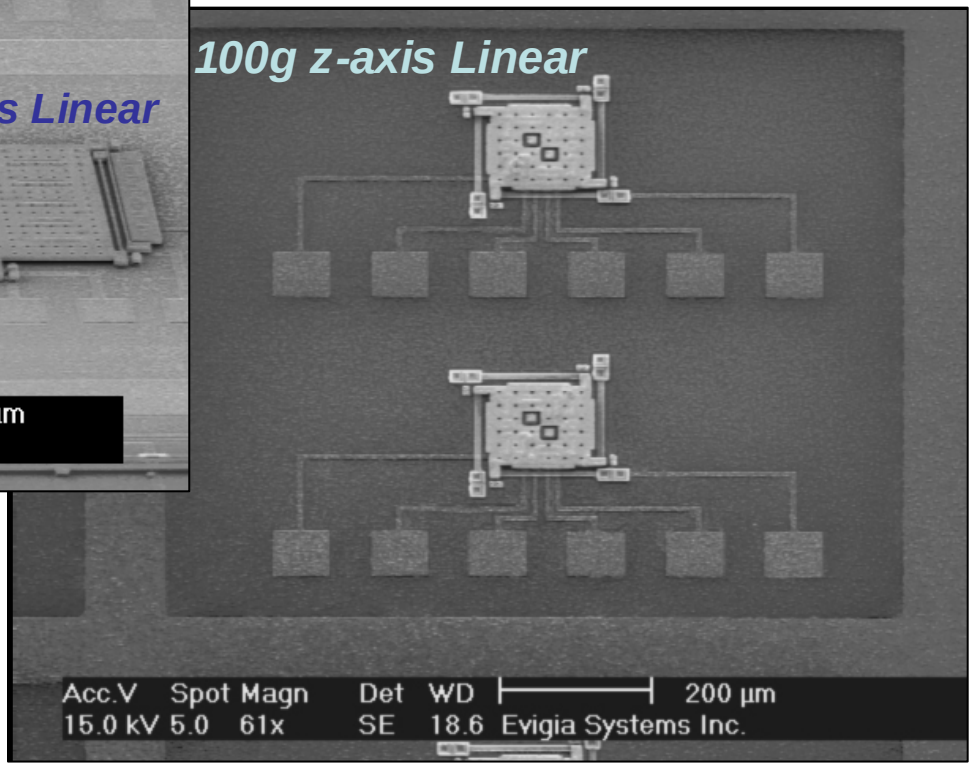

Fabricated XY-Linear Devices

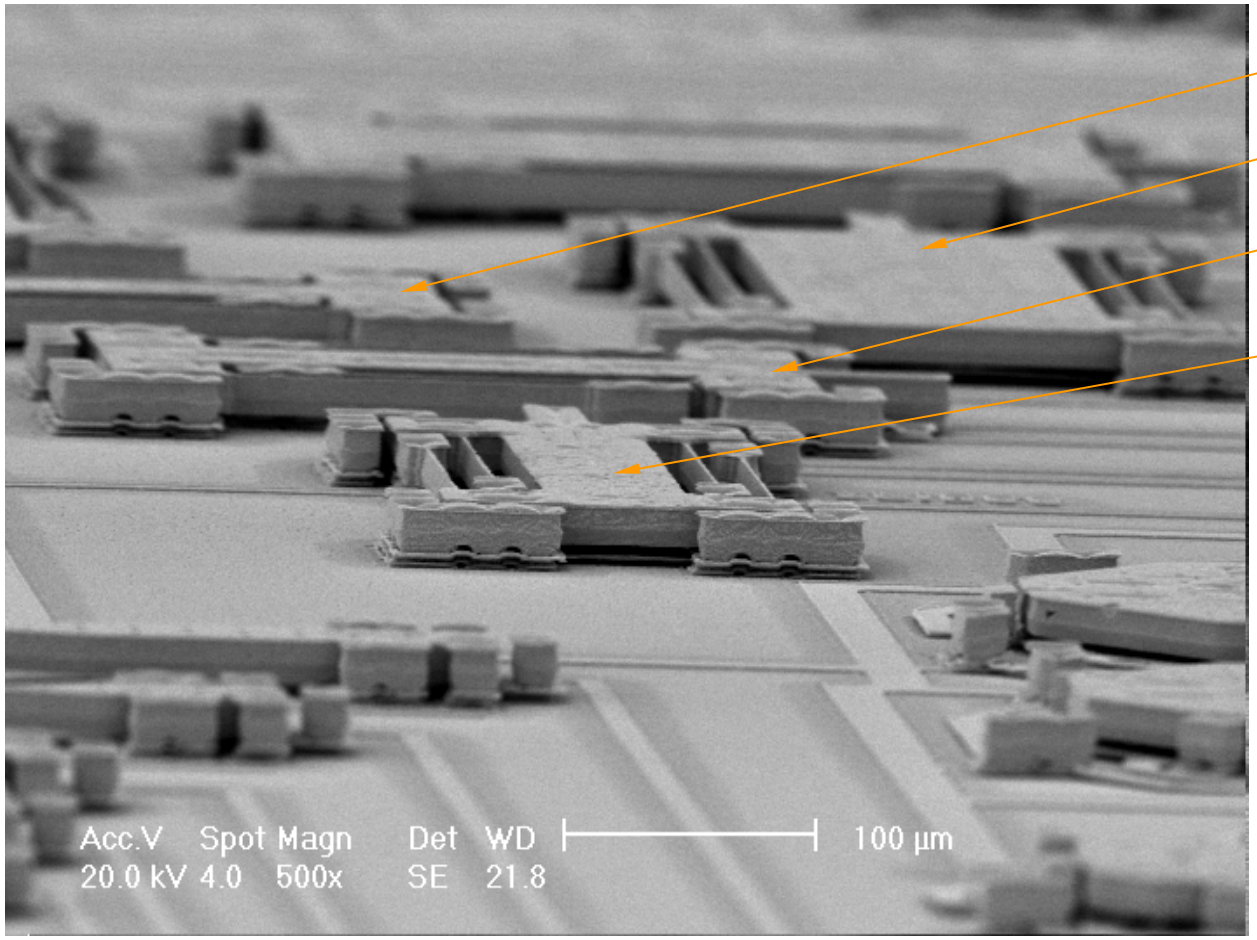

100g y-linear

200g x-linear

1000g y-linear

1000g x-linear

Fabricated Z-Torsional Devices

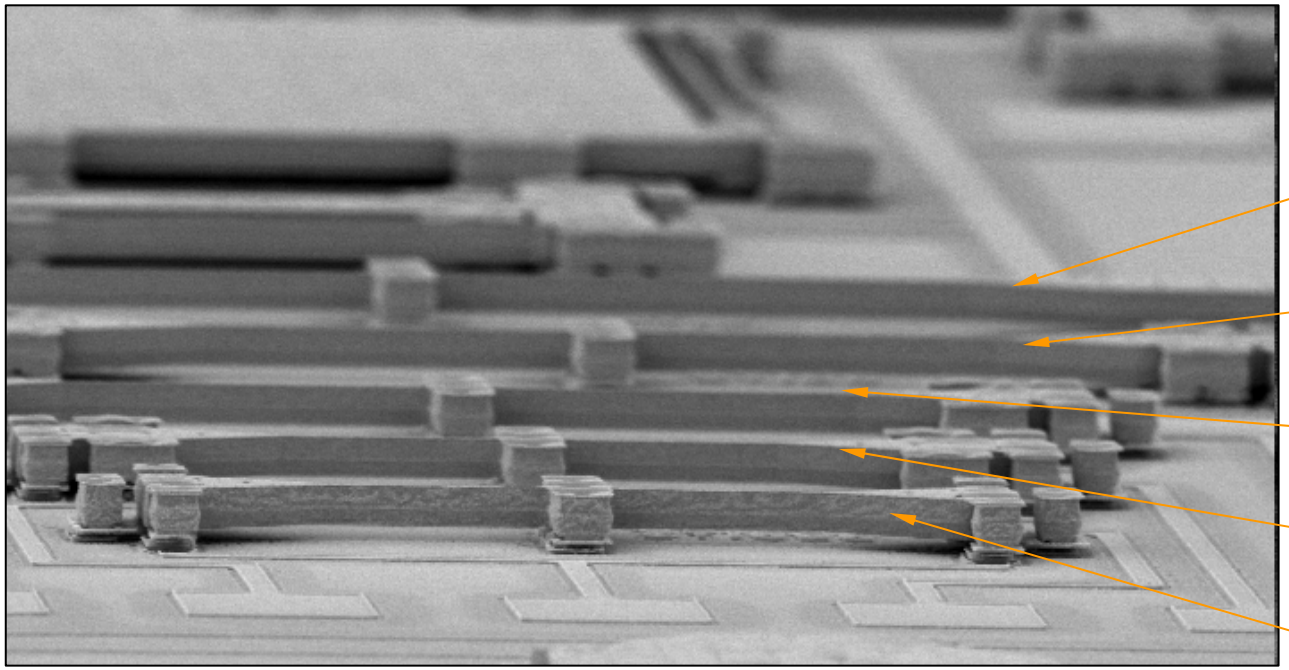

Manage Multiple Sensor Tags & Leverage from Standard

- ISO15693 RFID protocol implementation
- Reader powers up the sensor tags and send commands through 13.56MHz wireless link
- Reader initiates in-range tag “inventory”
- Tag communication anti-collision based on randomizing timeslot
- Reader establishes point-to-point communication with a tag
- All command & data transfer via memory R/W

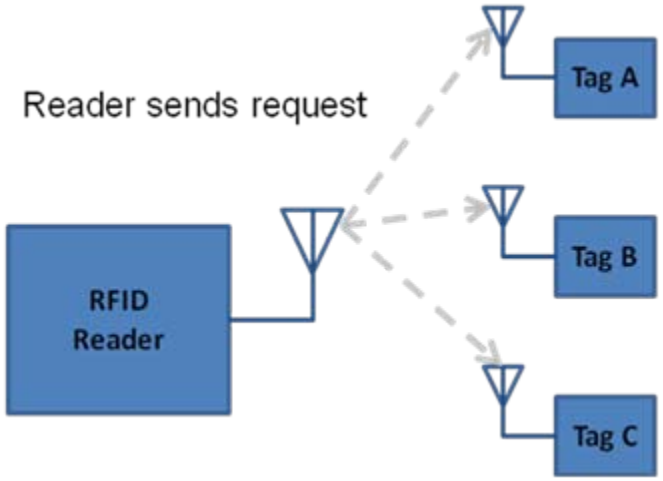

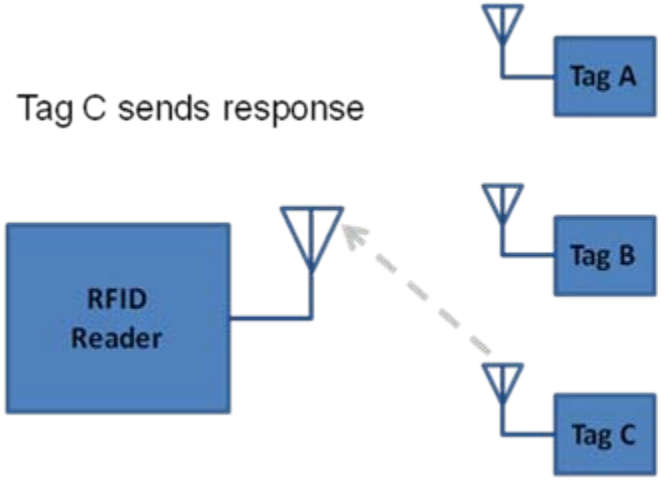

Custom Chip – ISO15693 & Sensor Functions

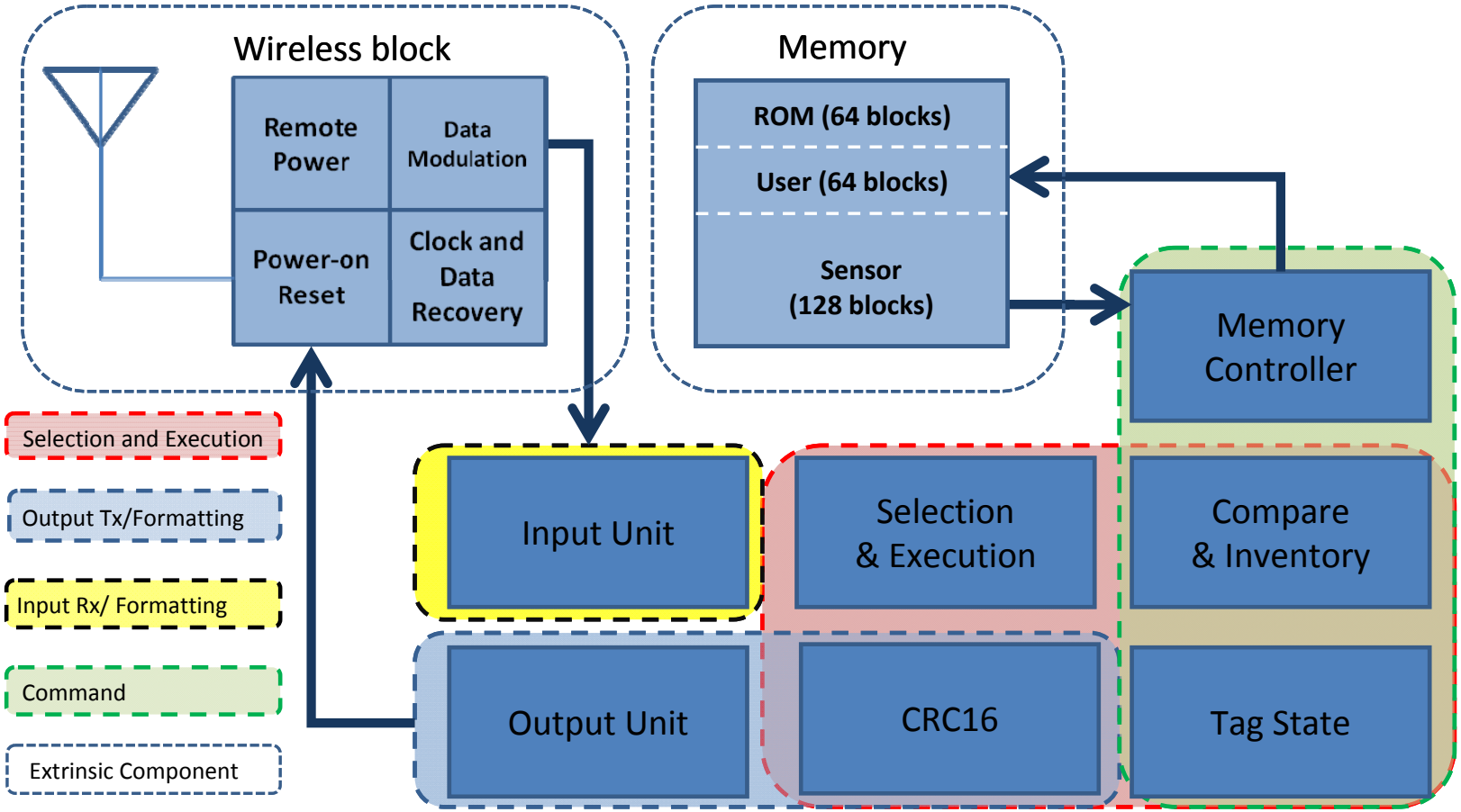

Custom Chip – ISO15693 & Sensor Functions

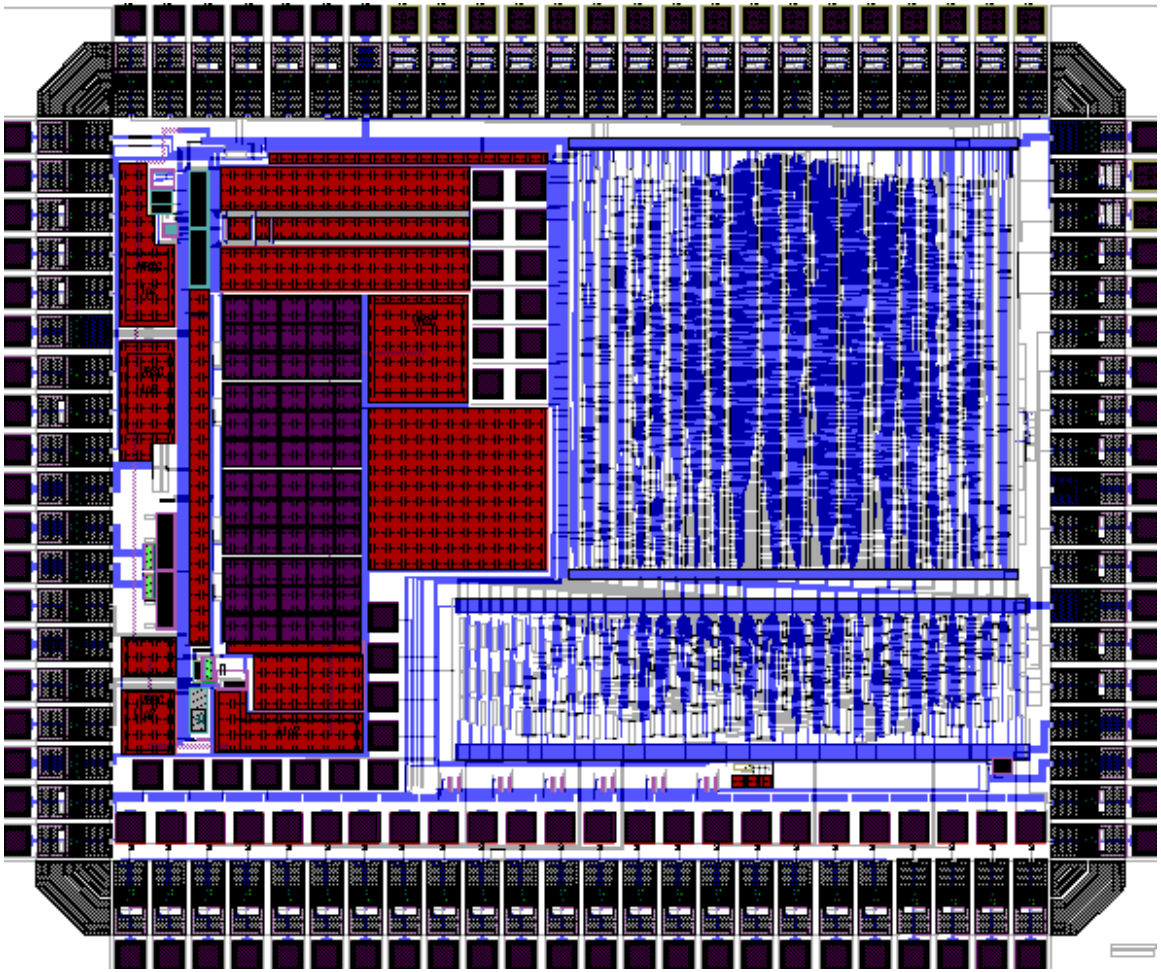

1st CMOS Chip in Fabrication 3.2mm x 2.6mm
in 0.35um 3M Mixed-Signal Process

Sensor Wireless Reader

- Similar to a handheld RFID reader
  - Handheld PC based with application SW
  - Wireless connectivity to handheld PC via custom hardware
  - Connectivity to network via handheld

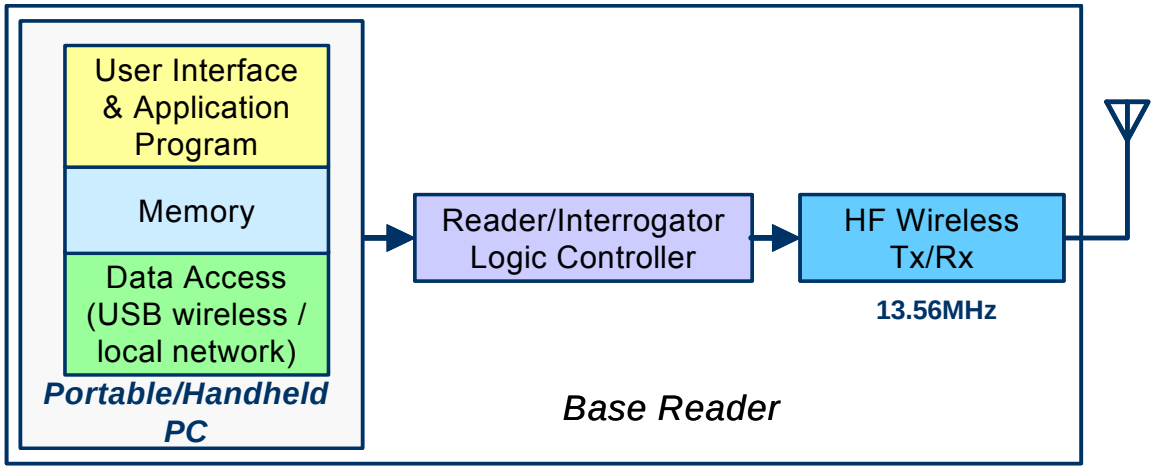

Representative RFID Reader

Potential Applications

- Protective gear monitoring
- Helmets and Hardhats for DoD and commercial personnel
- Miniature black boxes
- Weapons/valuable cargo transportation shock recording and tracking
  - Sophisticated ordnance items
  - Aviation AND General Purpose Electronic Equipment
  - Machinery Alteration
  - Combat vehicle critical operating equipment
  - Breakable consumables

Distributed Embedded Impact Sensing & Recording

Conclusions

- Batteryless 6-DOF miniature wireless acceleration sensor chips that can record the magnitude and duration of exposure to impact and blast waves
  - Development is funded by Air Force SBIR
- Ubiquitous monitoring of the defense personnel, their protective gear and equipment to quantify injury causation resulting from various weapons
  - Can be inexpensively installed on troop helmets
  - Measure blast exposures
  - Correlate against TBI injuries
  - Eventually used to identify exposures that can result in potential TBI
- The chips autonomously detect and record acceleration events till queried for data and/or reset

evigia Systems, Inc.