DYTRAN INSTRUMENTS, INC.

ilac-MRA ACCREDITED 2672.01

DNV

HASS

ESS

PIEZOELECTRIC AND DC SENSORS FOR MEASUREMENT AND MONITORING

HALT

AEROSPACE

PRESSURE

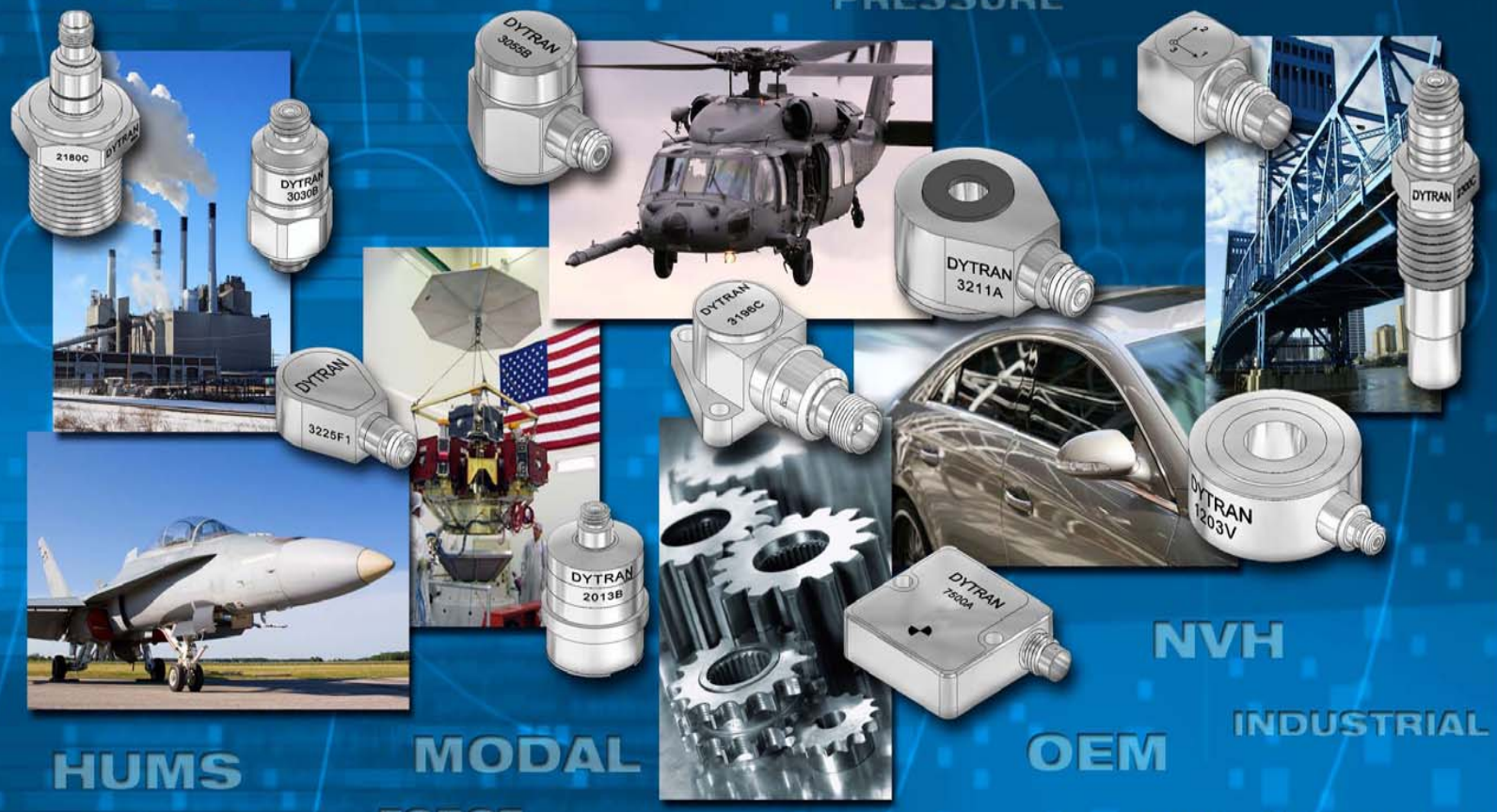

NVH

INDUSTRIAL

HUMS

MODAL

OEM

FORCE

VIBRATION

www.dytran.com

Installed HUMS Base

Dytran sensors are installed on the following airframes for HUMS applications

MH60 Blackhawk

A119

AS350

Bell 412

AH-64

MH47

Introduction to Piezoelectric Sensors

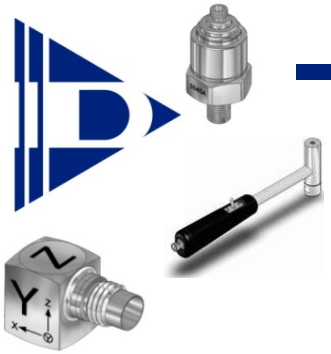

Dave Change

General Topics

- Why do we use piezoelectric sensors?
- Some common uses for piezo sensors
- Dynamic measurement vs. static measurement
- Piezoelectric transducer
  - Principle of operation
  - Information provided by the transducer
- Charge mode and voltage mode (IEPE)
- Transducer selection criteria
- Mounting considerations
- General handling

Stochastic Perturbation Theory

Since the solution of Langevin equation will depend on the coupling constant of the theory, look for the solution as a power expansion

$$\phi_\eta(x;t) = \phi_\eta^{(0)}(x;t) + \sum_{n>0} g^n \phi_\eta^{(n)}(x;t)$$

If you insert the previous expansion in the Langevin equation, the latter gets translated into a hierarchy of equations, each for each order, each dependent on lower orders.

We already know the solutions for ϕ^4 theory:

$$\phi = \int G\eta - \frac{\lambda}{3!}\int\int\int\int G(G\eta)(G\eta)(G\eta) + \dots$$

Diagrammatically ...

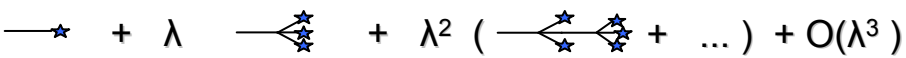

Now, also observables are expanded

$$O[\sum_k g^k \phi_\eta^{(k)}(t)] = \sum_k g^k O_k(t)$$

... and this is a propagator ...

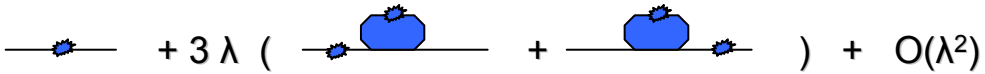

Observation: we can get power expansions from Stochastic Quantization's main assertion, e.g.

$$\lim_{t\to\infty}\langle O_k(t)\rangle_\eta = \lim_{T\to\infty} 1/T \sum_{j=1}^{T} O_k(jn) = O_k = \langle O\rangle^{(k)}$$

Why do we use piezo sensors?

- Small size
- Light weight
- 2-wire operation (IEPE)
- Wide dynamic range
- Wide temperature range
- Broad frequency range
- Ultra low noise
- Simple signal conditioning
- Cost effective test implementation

Common Uses for Piezoelectric Sensors

- Modal Analysis
- Environmental Stress Screening (ESS)
- Health and Usage Monitoring Systems (HUMS)
- Predictive / preventative maintenance
- Pyrotechnic events
- Aircraft ground vibration test
- Aircraft flight test

What factory supplied documentation comes with your accelerometer?

- Operating guide
- Outline installation drawing
- Specification sheet
- Calibration certificate

Outline installation drawing

MODEL	SENSITIVITY	F.S. RANGE, ±5V
3055B1	10 mV/G	±500 G's
3055B2	100 mV/G	±50 G's
3055B3	500 mV/G	±10 G's
3055B4	50 mV/G	±100 G's

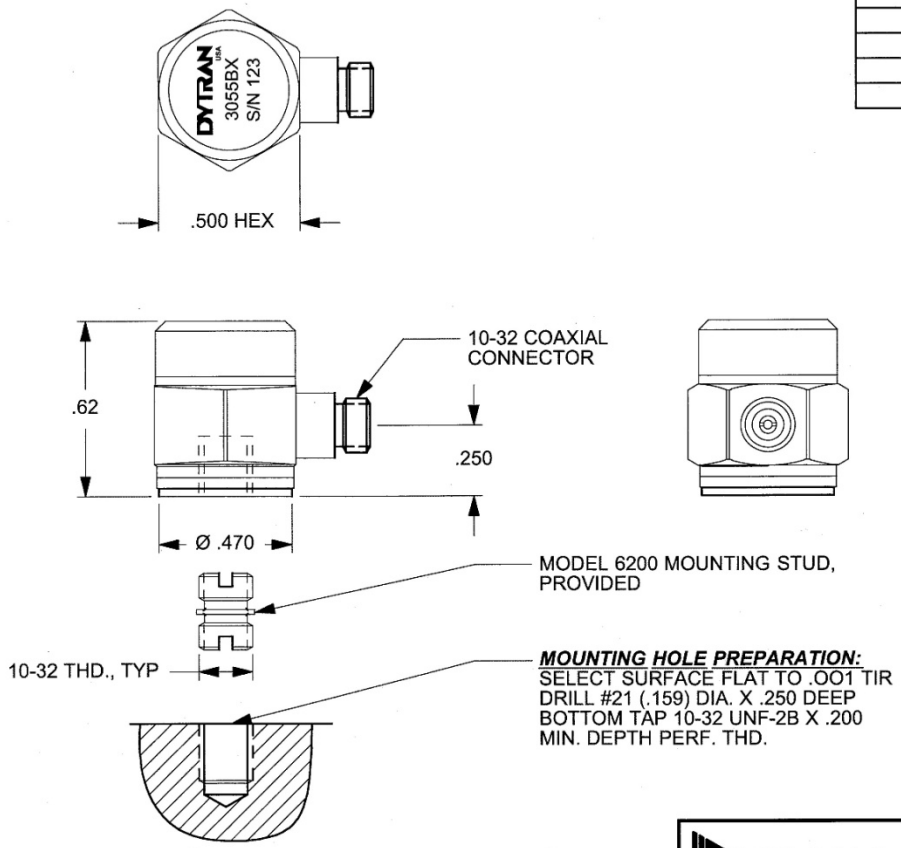

1. CASE AND CONNECTOR MATERIAL: TITANIUM.

DYTRAN INSTRUMENTS, INC. CHATSWORTH, CA.

SCALE 2X	REV -	DATE -	ECN -
DATE 12/22/04	PART NO. SERIES 3055B		
DRAWN N.C. / CHECKED R.A.	MAT'L -		
APPROVED	NEXT ASSEMBLY	USED ON 3055B1, B2, B3 & B4	
TITLE OUTLINE/INSTALLATION DRAWING, MODEL SERIES 3055B		DWG NO. 127-3055B	
		SHEET 1 OF 1	

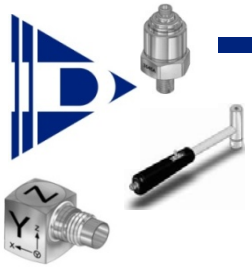

SPECIFICATIONS
MODEL SERIES 3055B LIVM ACCELEROMETERS

SPECIFICATION	VALUE	UNITS
PHYSICAL		
WEIGHT	10	Grams
SIZE, HEX x HEIGHT	.50 x 0.62	Inches
MOUNTING PROVISION	10-32 X .150 DEEP TAPPED HOLE	
CONNECTOR, RADIALLY MOUNTED	10-32	Coaxial
MATERIAL, BASE, CAP & CONNECTOR	TITANIUM	
SEISMIC ELEMENT TYPE	CERAMIC, PLANAR SHEAR	

PERFORMANCE

	MODELS				
	3055B1	**3055B2**	**3055B3**	**3055B4**	
SENSITIVITY, ± 5% [1]	10	100	500	50	mV/g
RANGE F.S. FOR ± 5 VOLTS OUTPUT	± 500	±50	±10	±100	g's
FREQUENCY RANGE, ± 5% (all models)		1 to 10,000			Hz
RESONANT FREQUENCY, NOM. (all models)		35			kHz
ELECTRICAL NOISE FLOOR (25Hz-25kHz)	.0002	.00006	.00005	.0005	g's RMS
(1Hz-10kHz)	.0004	.0001	.0001	.0010	g's RMS
LINEARITY [2] (all models)		±2			% F.S.
TRANSVERSE SENSITIVITY, MAX. (all models)		±2			%

ENVIRONMENTAL

	3055B1	**3055B2**	**3055B3**	**3055B4**	
MAXIMUM VIBRATION/SHOCK	600/3000	400/2000	200/1000	500/2000	± g's/g's PK
TEMPERATURE RANGE (all models)		-60 to +250			^{o}F
SEAL, HERMETIC		Glass-to-metal/welded			
COEFFICIENT OF THERMAL SENSITIVITY		.06			%/^{o}F

ELECTRICAL

SUPPLY CURRENT/COMPLIANCE VOLTAGE RANGE [3]	2 to 20/+18 to +30	mA/Volts
OUTPUT IMPEDANCE, TYP.	100	Ohms
BIAS VOLTAGE, +10.5 VOLTS NOM.	+9 to +12	VDC
DISCHARGE TIME CONSTANT, NOM.	0.5	Sec
OUTPUT SIGNAL POLARITY FOR ACCELERATION TOWARD TOP		Positive
ELECTRICAL ISOLATION, CASE GROUND TO MOUNTING SURFACE		10 Meg Ω, min.

Accessories supplied: (1) Model 6200 mounting stud.

[1] Measured at 100 Hz, 1 G RMS per ISA RP 37.2.
[2] Measured using zero-based best straight line method, % of F.S. or any lesser range.
[3] Do not apply power to this device without current limiting, 20 mA MAX. To do so will destroy the integral IC amplifier.

CALIBRATION CERTIFICATE
VOLTAGE MODE ACCELEROMETER

CUSTOMER:				**TEST REPORT #:**	*6064* *4/21/2008*
PURCHASE ORDER #:	*ATPL/PO/066/2007-08*	**SALES ORDER #:**	*130778*	**PROCEDURE:**	*TP3002*
MODEL:	*3055B1*	**SERIAL #:**	*6064*	**RANGE, F.S. (g's):**	*+/- 500*
NEW UNIT	X	**RE-CALIBRATION [1]**		**AS RECEIVED CODE**	**AS RETURNED CODE**
REF. SENSITIVITY (mV/g) [2]:	***9.90***	**TEMP (°C):**	*23*	**HUMIDITY (%):**	*37*

FREQUENCY RESPONSE [3]

FREQUENCY (Hz)	SENSITIVITY (mV/g)	FREQUENCY (Hz)	SENSITIVITY (mV/g)
20	*10.00*	500	*9.90*
30	*9.90*	1000	*9.90*
50	*9.90*	3000	*9.90*
100	*9.90*	5000	*10.00*
300	*9.90*	8000	*10.20*
TRANSVERSE SENSITIVITY (%):	*0.9*	10000	*10.40*
DISCHARGE TIME CONSTANT (sec):	*0.50*	**BIAS VOLTAGE (VDC):**	*12.2*

Amplitude Response

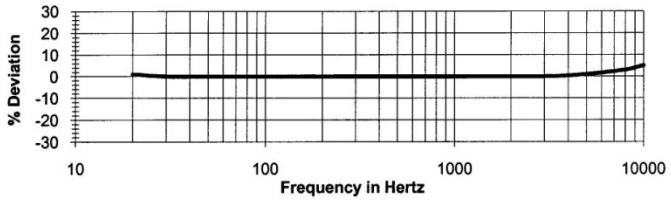

REMARKS:

TEST EQUIPMENT LIST - CALIBRATION STATION # 9

DII #	MANUFACTURER	MODEL	SERIAL #	DESCRIPTION	CAL DATE	DUE DATE
540	*BERAN INSTRUMENTS*	*475*	*182448*	*VIBRATION CALIBRATOR*	*06/18/07*	*06/18/08*
541	*BERAN INSTRUMENTS*	*801A*	*A004*	*DUAL AMPLIFIER UNIT*	*06/18/07*	*06/18/08*
319	*FLUKE*	*45*	*7276081*	*MULTIMETER*	*04/24/07*	*04/24/08*
017	*NICOLET*	*310*	*IAQ9406710*	*DIGITAL OSCILLOSCOPE*	*09/11/07*	*09/11/08*
686	*DYTRAN INST.*	*3010M14*	*1684*	*ACCELEROMETER*	*08/07/07*	*08/07/08*

[1] AS RECEIVED / AS RETURNED CODES:

1 = IN TOLERANCE, NO ADJUSTMENTS
2 = IN TOLERANCE, BUT ADJUSTED
3 = OUT OF TOLERANCE < 5%
4 = OUT OF TOLERANCE > 5%
5 = REPAIR REQUIRED
6 = REPAIRED AND CALIBRATED
7 = UNIT NON-REPAIRABLE, RECOMMEND REPLACEMENT
8 = UNIT SERVICEABLE WITH CURRENT CALIBRATION DATA

[2] THE REFERENCE SENSITIVITY IS MEASURED AT 100 Hz, 1G RMS.

[3] THIS CALIBRATION WAS PERFORMED IN ACCORDANCE WITH ANSI/NCSL Z540-1-1994, ISO 10012-1, ISO/IEC17025 USING THE BACK-TO-BACK COMPARISON METHOD PER ISA RP37.2 AND IS TRACEABLE TO THE NIST THROUGH TEST REPORT # 10850-120LHS DUE 08-07-08
ESTIMATED UNCERTAINTY OF CALIBRATION: 2% FROM 20-50 Hz, 1% FROM 100-2000 Hz, 2% FROM 2-10 kHz. APPLIES TO FREQUENCY RESPONSE ONLY.

THIS CERTIFICATE SHALL NOT BE REPRODUCED EXCEPT IN FULL, WITHOUT THE WRITTEN PERMISSION FROM DYTRAN INSTRUMENTS, INC.

CALIBRATION TECHNICIAN: ***PHUOC TRAN***

TEST DATE : *04/21/08*

RECOMMENDED RECALL DATE : *04/21/09*

Other Piezoelectric Devices

- Today's discussion will focus primarily on piezoelectric type accelerometers but we use the same principles to measure dynamic force and pressure

Dynamic vs. Static Measurement

Dynamic Measurement

- The physical quantity (i.e. acceleration, force, pressure) is rapidly changing over time
- Examples of dynamic events
  - Vibration of rotating machinery
  - Pressure in a reciprocating engine
  - Force input to a structure via a shake table

Static Measurement

- The physical quantity being measured does not change as a function of time (or changes very slowly)
- Examples of static measurements
  - Force measurement in a bathroom scale
  - Constant acceleration due to gravity

Definition of Piezoelectricity

Piezoelectricity is the ability of some materials (notably crystals and certain ceramics) to generated an electrical potential in response to applied mechanical stress. This may take the form of a separation of electric charge across the crystal lattice. If the material is not short-circuited, the applied charge induces a voltage across the material. The word is derive from the Greek word *piezien*, which means to squeeze or press.

What is a Piezoelectric Transducer?

- A *transducer* converts one form of energy into another
  - In the case of *piezoelectric transducer* the transduction is from mechanical energy to electrical energy
- The prefix “piezo” is a Greek word meaning “to squeeze”
- Materials that produce an electric charge when a force is applied to them exhibit what is known as the piezoelectric effect
- Many piezoelectric materials are known to exist
  - Quartz, tourmaline, ceramic (PZT), GAPO4 and many others

Typical IEPE Design

- 3211 link to
- 1060 series link to
- 2005V seires link to

Piezoelectric Transducer

- The active element in all piezoelectric devices is a piece of piezoelectric material. There are many different sensor designs based on various crystal cuts and materials.

- The common types (modes) of piezoelectric sensors in use today are:
  - *Voltage mode* (IEPE, LIVM, ICP, Piezotron, Isotron)
  - *Charge mode*
  - Each of these designs have their advantages and disadvantages

Piezoelectric Sensing Element Designs

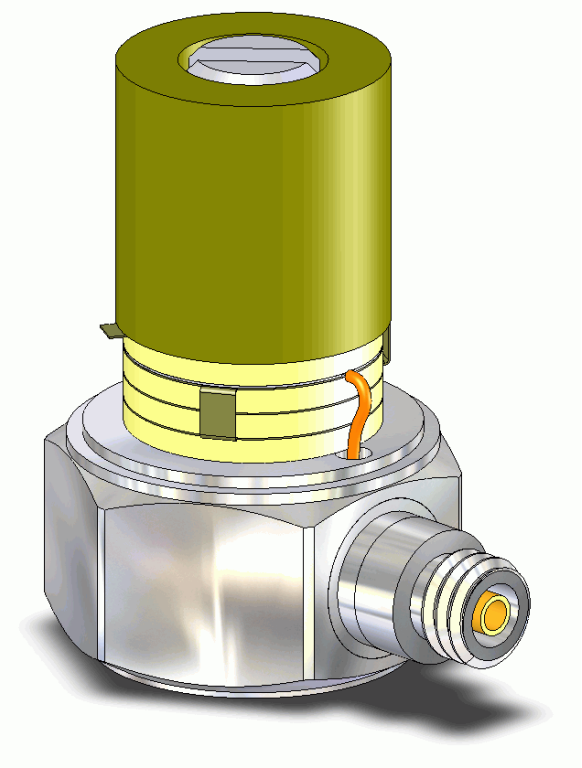

Compression

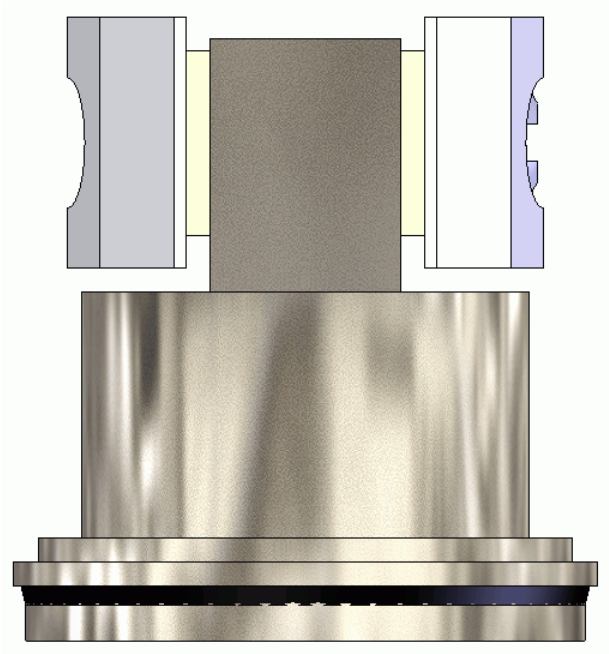

Shear

Voltage Mode Transducer

- Can utilize either quartz or ceramic
- Have built in or integral electronics
- Low cost signal conditioning
- Stable over broad temperature range
- Limited upper temperature range due to built in electronics
- Many modern analyzers and data acquisition systems have IEPE power built in
- Most voltage mode (IEPE) sensors available with TEDS option
- Ease of use

Input / Output Characteristics of Voltage Mode (IEPE) Sensor

- *Input* : 18 – 24 Volts DC, 2–20mA constant current
  - Inputs other than the specified value can be harmful to the sensor
- *Output* : voltage proportional to acceleration or vibration

Note: The IEPE or voltage mode sensor is strictly a two wire device (sig / power and ground)

Voltage Mode Setup

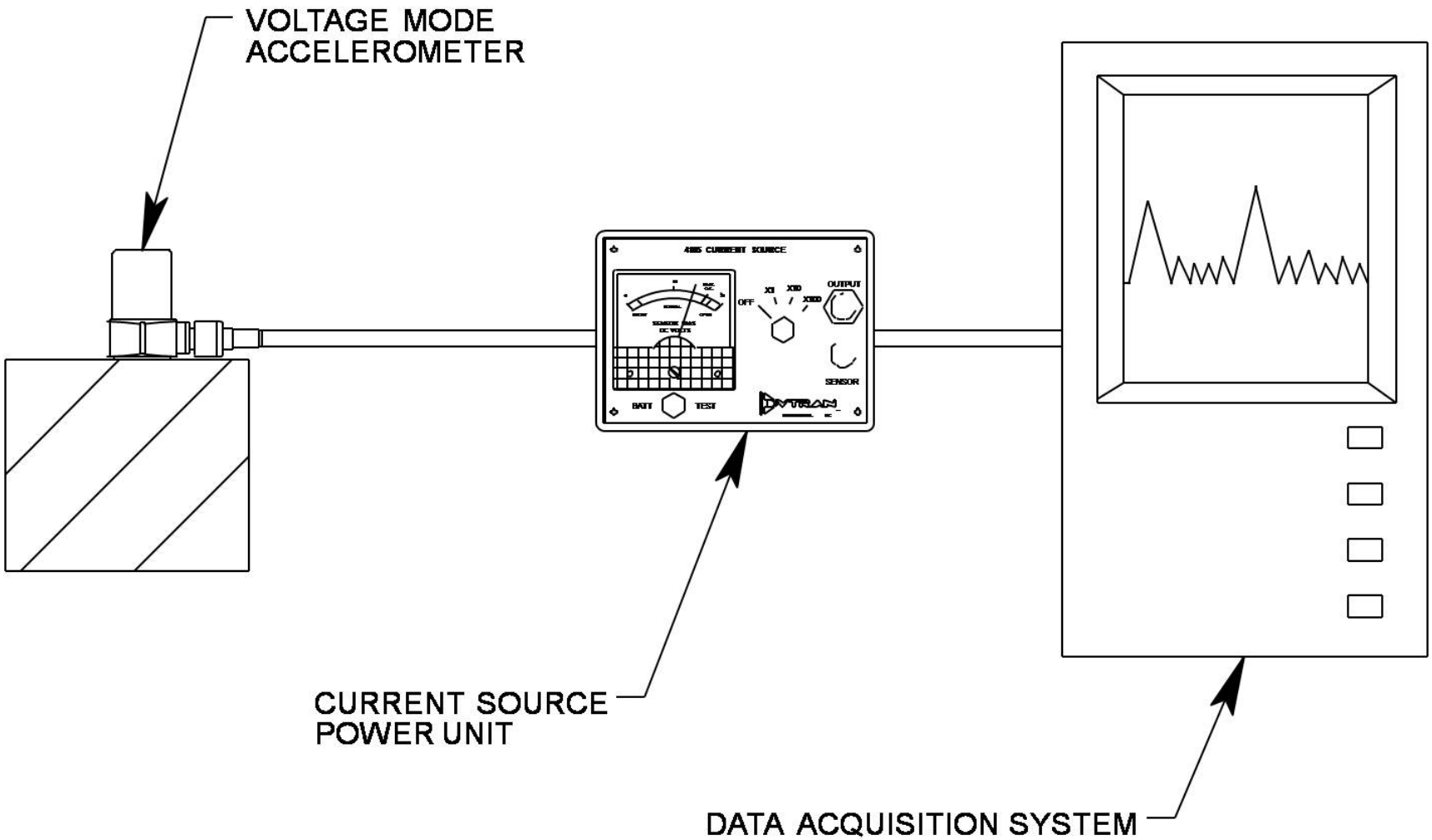

Alternate Voltage Mode Setup

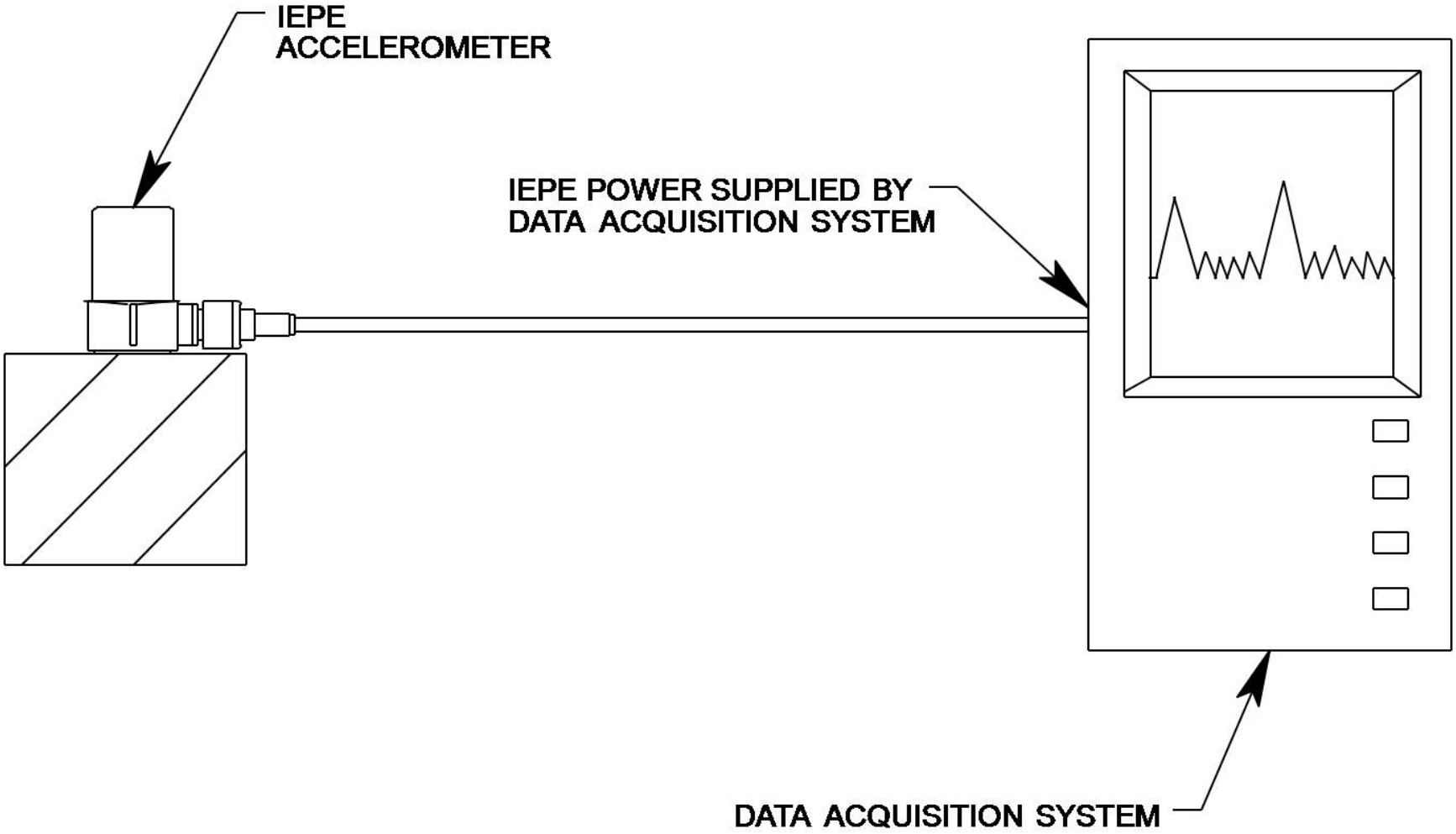

Typical IEPE System Design

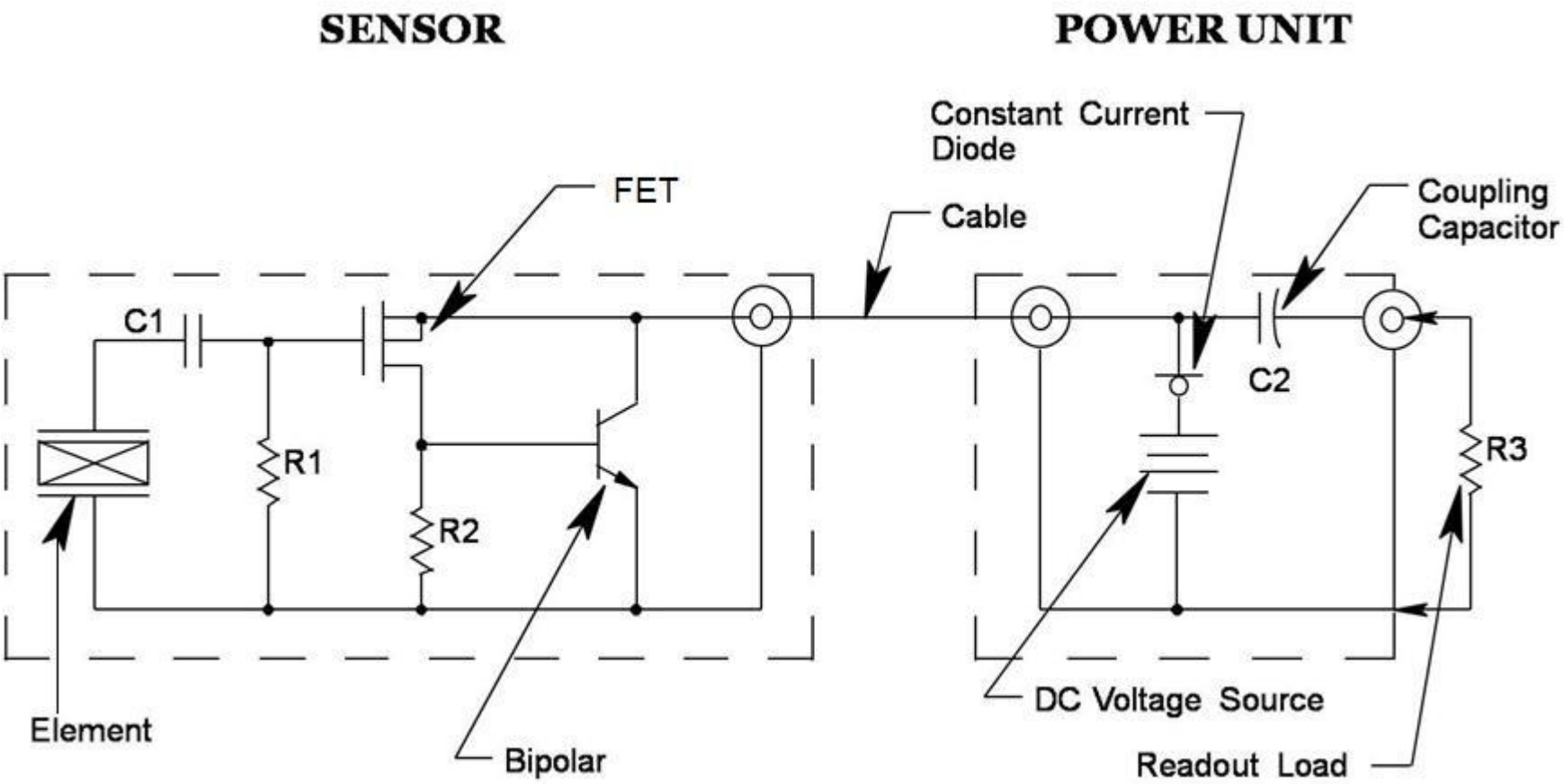

Bias Voltage Levels in Typical IEPE Systems

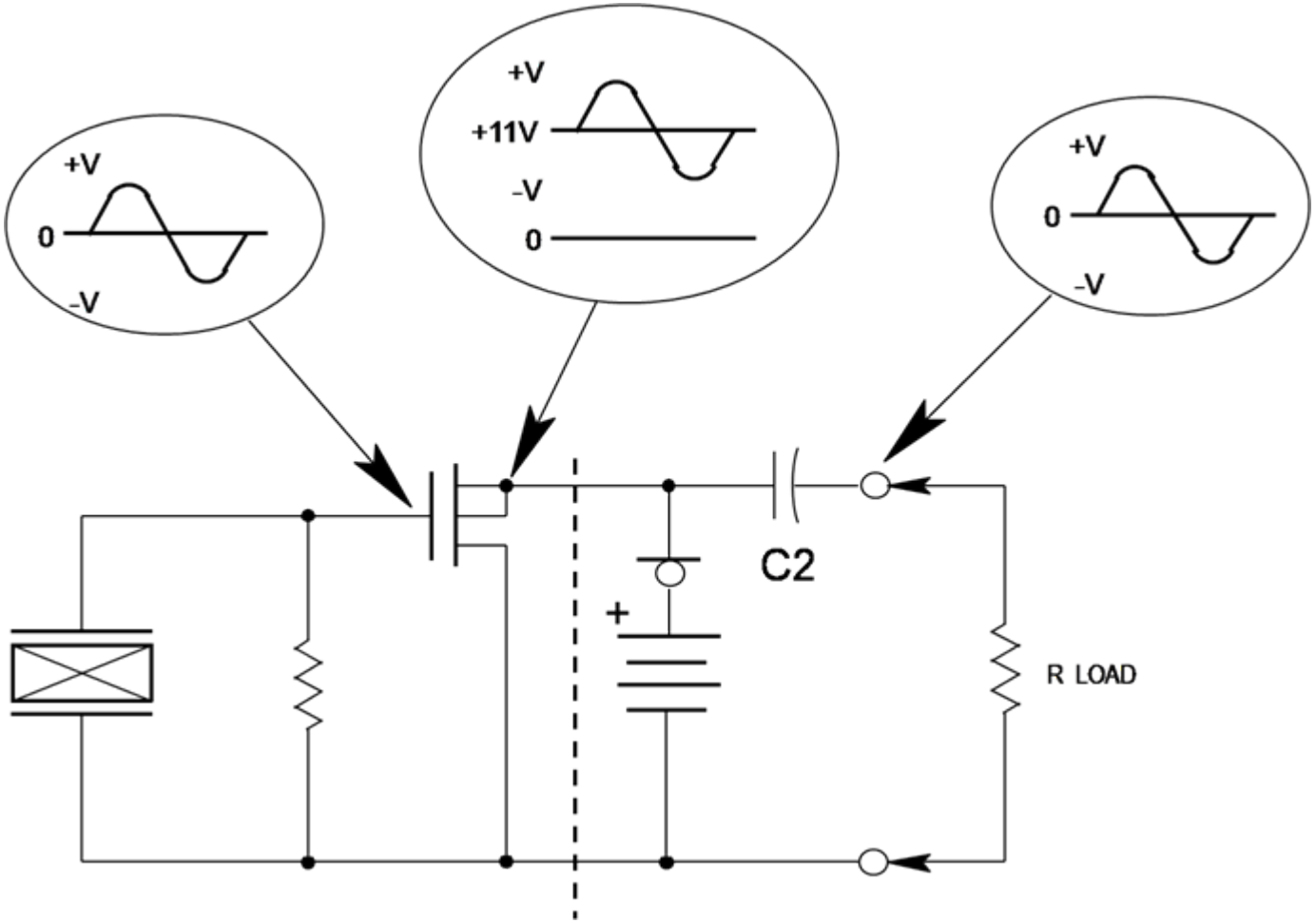

IEPE Sensor Frequency Response

- Low frequency response is controlled by the sensor Discharge Time Constant (DTC)
  - Factory set and cannot be changed
  - Can be changed at time of manufacture
- High frequency response is generally a function of sensor resonance (natural) frequency
- Filtering in the sensor or signal conditioning can also effect the sensor frequency response
- High sensitivity sensors generally have low resonance frequency
- Low sensitivity sensors generally have high resonance frequency

Frequency Response of Piezoelectric Accelerometers

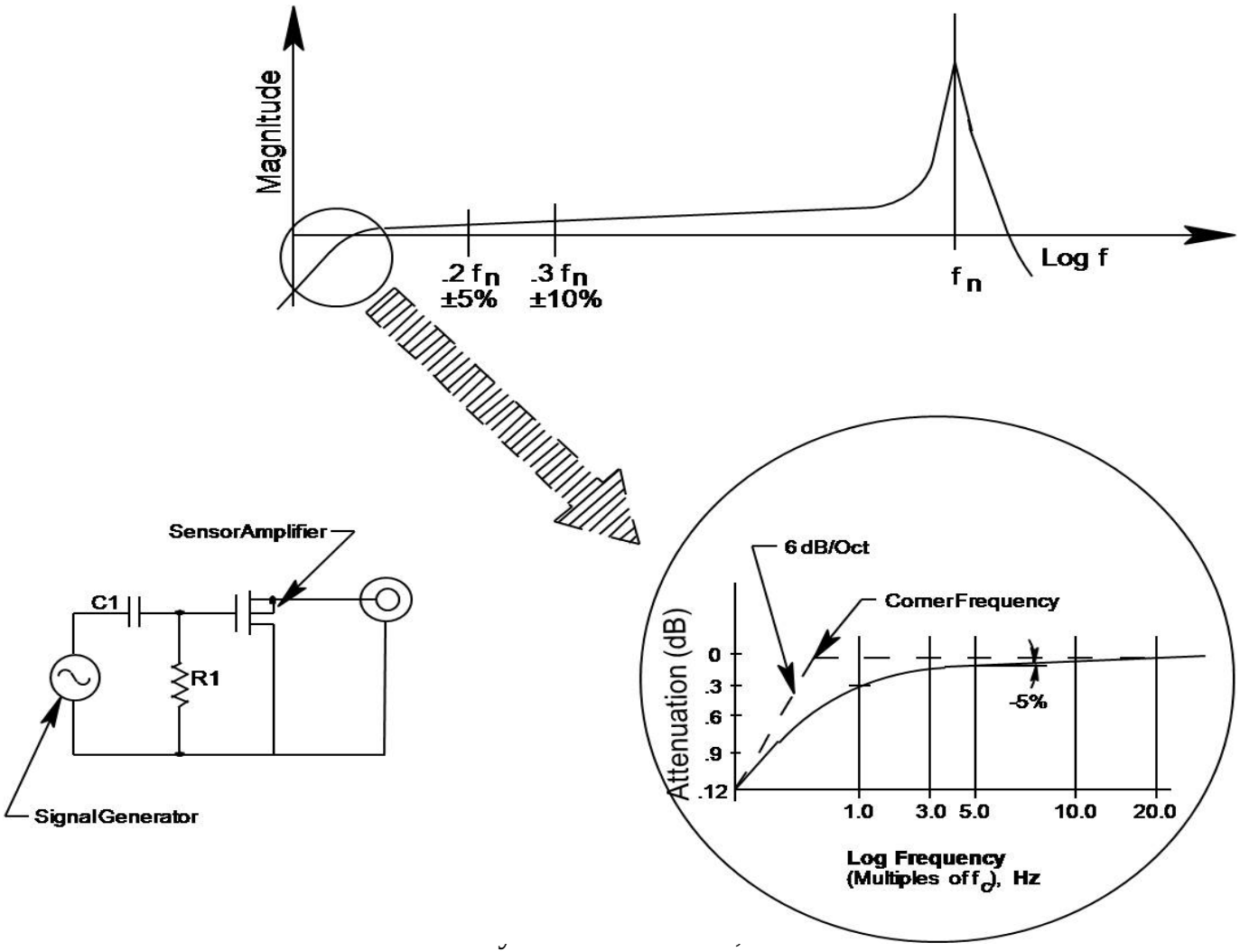

Panel Meter Examples

Trouble Shooting Aide

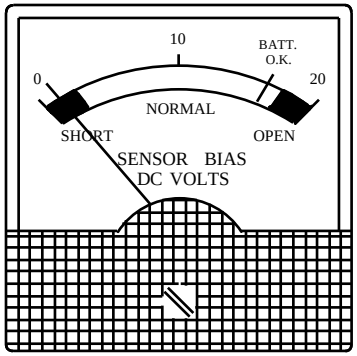

Shorted

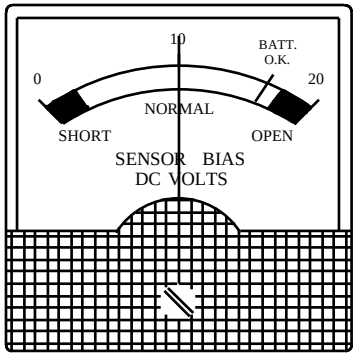

Normal

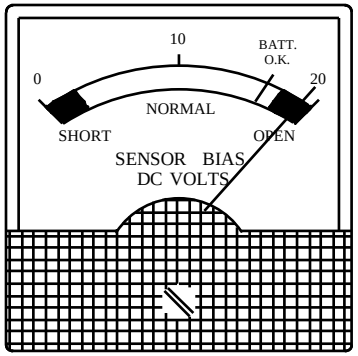

Open

Discharge Time Constant (DTC)

- Discharge Time Constant – the time required for the output voltage from a sensor to discharge to 37% of its original value in response to a zero rise time step function input
  - Determines sensor low frequency response

- Low frequency response is approximately equal to:

–3dB Point	=	.16/DTC
–5%	=	–3dB Point x 3

Charge Mode Transducers

- Usually ceramic based
- No built-in electronics
- Good for high temperature (+500°F)
- Expensive signal conditioning
- Low noise cable required for most applications
- Charge amps are generally more difficult to use (i.e. setting scale factors, etc.)

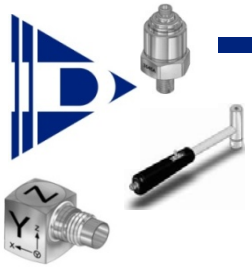

Mounting Options

- Stud mounting
  - Optimum frequency response
- Epoxy adapter, stud mount sensor
  - Good frequency response
- Magnetic mount
  - Convenient, limited frequency response
- Magnetic mount to epoxied target
  - Preferable method for magnetic mounting

Frequency Response Effects

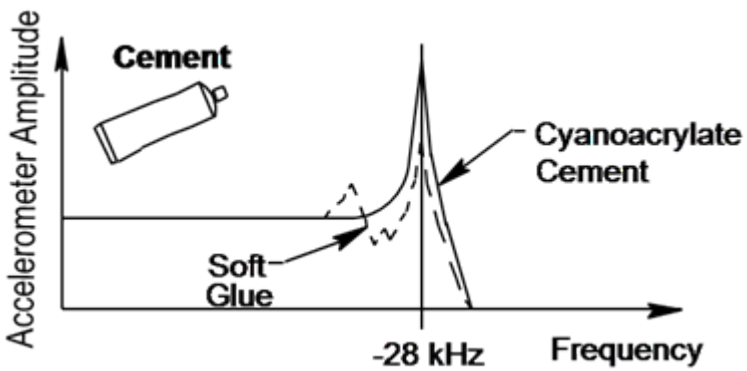

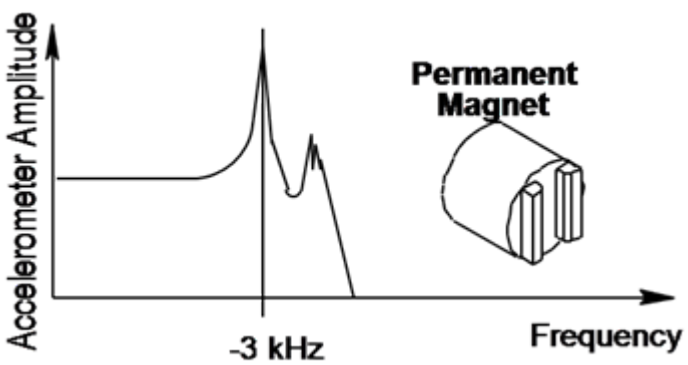

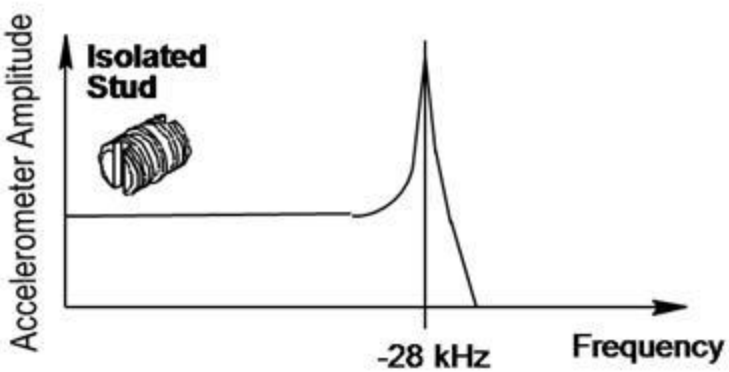

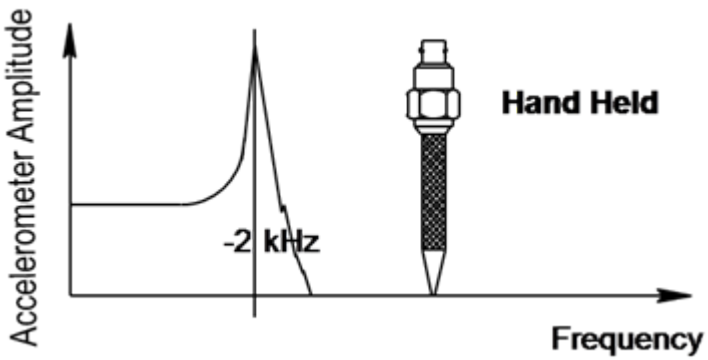

Transducer Selection Criteria

- How much space is available for mounting the sensor (i.e. footprint)?
- What max mass can be used (beware of mass loading)
- What is the vibration level?
- What are the frequencies of interest (max and min)?
- What is the temperature range required?
- Are corrosive chemicals present (industrial)?
- Is physical clearance a problem?
- Is the environment wet or dry?
- How will the sensor be mounted (stud, wax, glue)?
- What cable length will be required?
- What cable jacket material will be adequate?

Dynamic Range

- Select proper full scale amplitude from transducer specifications
- Full scale ranges normally listed for ±5 Volts out
- Over range capability usually set by current source open circuit output voltage (not always true)
- If P.C. based data acquisition make sure board is configured properly for your specific measurement

Impulse Hammers

- Provide a known force input (mV/Lb) to a structure
- Many different physical sizes are available
- For industrial use the 1Lb, 3Lb, or 12Lb sledge hammers are most popular
- Four different tip materials are provided for pulse tailoring
- Transfer function measurements consist of a minimum of two channels
- Impulse hammers are used to help determine the transfer function (output / input) of a given structure

Typical Multi-Channel Modal Setup

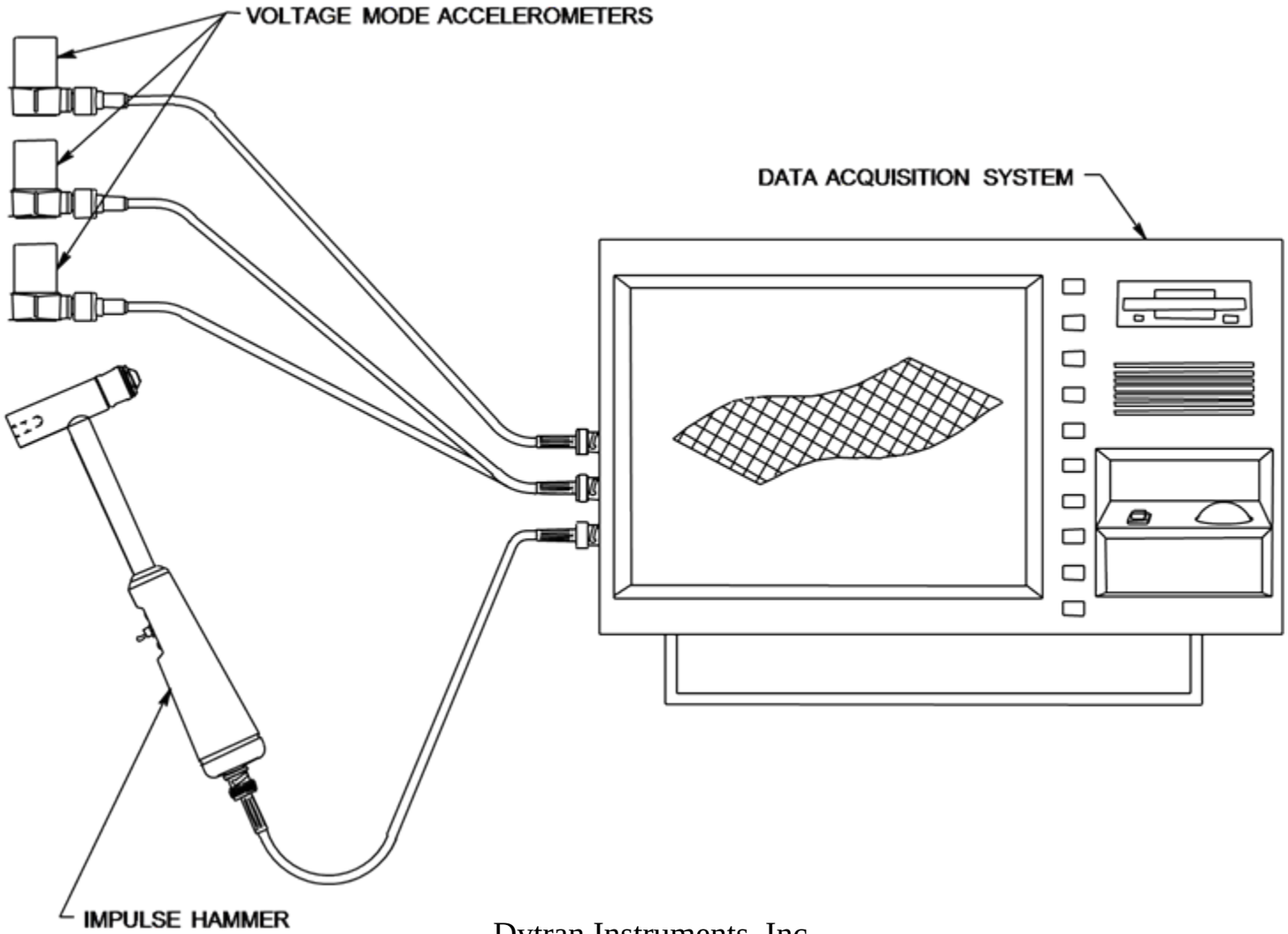

General care and handling of your piezoelectric device

- Do not
  - Drop your sensor on a concrete floor
  - Connect a bench power supply to your sensor
  - Remove you sensor with a hammer
  - Use un-calibrated accelerometers
  - Rub your feet across the floor and touch the connector (static electricity)

General care continued

- Do
  - If possible, store your sensor in the box it came in
  - Connect a constant current supply
  - Remove your sensor with a solvent and proper tool
  - Re-calibrate your sensor on a yearly basis
  - Discharge yourself before handling the sensor

TEDS- Transducer Electronic Data Sheet

Basic TEDS	Manufacturer ID	43 (Acme Accelerometer Company)
	Model Number	7115
	Version Letter	B
	Serial Number	X001891
Standard and Extended TEDS (fields will vary according to transducer type)	Calibration Date	Jan 29, 2000
	Sensitivity @ ref. condition (S ref)	1.0094E+03 mV/g
	Physical measurement range	± 50 g
	Electrical output range	± 5 V
	Reference frequency (f ref)	100.0 Hz
	Quality factor @ fref (Q)	300 E-3
	Temperature coefficient	-0.48 %/°C
	Reference temperature (T ref)	23 °C
	Sensitivity direction (x,y,z)	x
User Area	Sensor Location	Strut 3A
	Calibration due date	April 15, 2002

MEMS Accelerometers
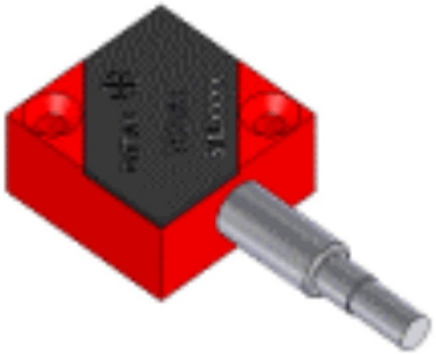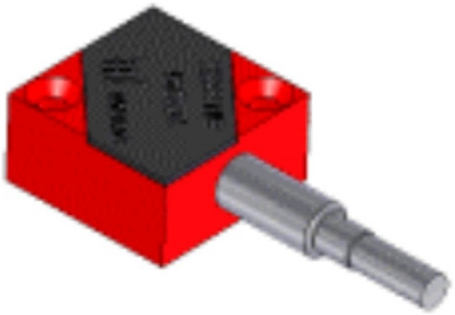
Variable Capacitance MEMS accelerometers