THE USE OF TELEMETRY DATA IN AN AIR DATA SYSTEM (ADS)

Thomas M. Morrison
JT3, Edwards AFB

Distribution A: Approved for public release; distribution is unlimited.

This briefing, presentation, or document is for information only. No US Government commitment to sell, loan, lease, co-develop or co-produce defense articles or provide defense services is implied or intended.

Introduction

- The Avionics Modernization Program (AMP) upgraded the static and total air pressure sensors.
- The new AMP sensors were untested in this application.
- Instrumentation sensors were already there to collect static and total air pressures.
- A flight test air data system (ADS) was added as a second indication for aircrew.
- A new computer was needed to supply the ADS values and graphics from instrumentation data.
- Instrumentation ADS displays were added for the pilot and copilot.

ADS Requirements

- All ADS accuracy requirements were 0.25% of Full Scale (FS).
- An additional pressure sensor accuracy requirement was +/-0.015% of FS.
- A wing tip boom was to be used to collect ADS information.
- Wing tip boom measurements are
  - Static and total Pressures
  - Total air temperature (TAT)
  - Angle-of-Attack (AOA) and Angle-of-Sideslip (AOS)
  - Airspeed, altitude, and Mach number are all derived.

Sensors

- Air data boom manufactured by Space Age Controls was attached to wingtip and included
  - Total and static pressure ports
  - A TAT Probe
  - AOA and AOS Vanes
- Total and static air pressure ports were connected out at wingtip to pressure transmitters manufactured by Paroscientific.
- The TAT probe was amplified out at wingtip by a circuit manufactured by Quad-Tron.
- The AOA and AOS vanes were not buffered.

Air Data Boom

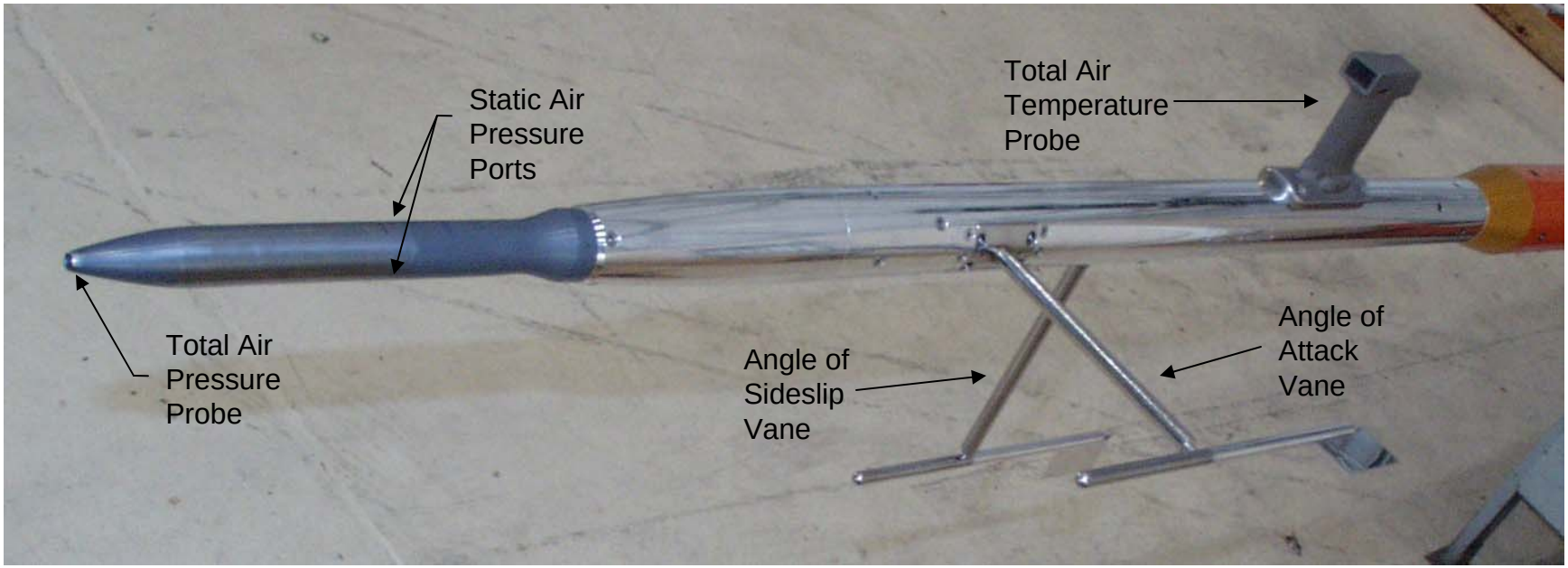

Pressure Measurements

- Only two sources for pressure sensors that would meet the +/-0.015% of FS requirement at the time were found.
- To reduce errors pressure sensors were located near the pressure input ports on wing tip.
- Chosen sensor converts pressure to digital signal.
- Chosen sensor had a wide supply voltage range.
- Pressures were the most important parameters to the customer and they were holding to the +/-0.015% of FS specification and not the overall system specification.

Pressure Sensor Calibration

- Pressure transmitters came from manufacturer calibrated and adjusted with calibration certificates and data sheets.
- Checked by instrumentation lab when the pressure transmitters were received.
- Specifications of the pressure calibrator in the instrumentation lab was marginally better than the specifications of the pressure transmitters.
- Concerns about method of temperature testing.
- Pressure transmitters sent back to manufacturer for calibration periodically.

Pressure Sensor Specification

- Accuracy (0.01% of FS) includes repeatability and hysteresis.
- Resolution of the pressure transmitters was 0.0001%.
- Long Term Stability was -7 ppm per year.
- Supply voltage sensitivity was <0.001% per volt.
- Understanding the importance of each specification.

Temperature Measurement

- TAT probe used a Resistance Temperature Detector (RTD) sensor to measure air stream temperature.
- An amplifier to convert the RTD measurement into a voltage was located in wing tip near the sensor.
- Air flow was required to obtain good readings.
- Lack of temperature tester that supplied an airstream posed a problem with system checkout.
- Bad return in data acquisition system (DAS) caused initial temperature offset in data.
- Temperature measurement was not used by ADS but is collected by DAS.
- Temperature sensor met the +/-0.25% of FS specification.

Angle of Attack and Angle of Side-Slip Measurements

- Vanes affected greatly by environment.
- Potentiometers have a 10% tolerance with a 0.5% linearity.
- Excitation and signals go through 100 feet of cabling before they are connected to the ADS and DAS.
- The boom boresight adds another degree of error.
- System check uses a fixture and a person out on the wing-tip to normalize readings.
- Hard to determine the accuracy of readings.
- AOA and AOS measurements are outside the +/-0.25% of FS specification.

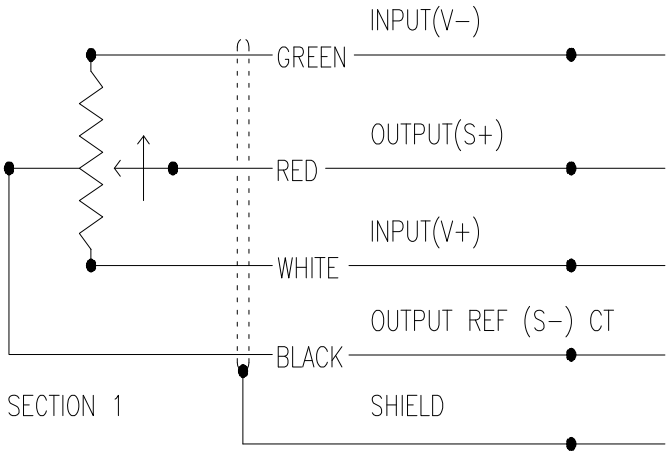

ADS Equations

- Altitude, airspeed, and Mach number have to be computed.
- Many equations are available to do this.
- Goodrich Sensor Systems publishes an Air Data Handbook that uses temperature in the altitude equations.
- Edwards AFB uses equations that involve the local barometric settings instead of temperature.
- Indicated barometrically-corrected altitude equation from the Manual of Barometry (WBAN).
- Indicated airspeed and Mach number come from the Flight Test Engineering Handbook.

ADS Equations (Continued)

- Indicated Barometrically -Corrected Altitude

$$H_i = 145442\left[\left(\frac{P_{as}}{P_{a_{SL}}}\right)^{0.190262} - \left(\frac{P_{s_i}}{P_{a_{SL}}}\right)^{0.190262}\right]$$

- Indicated Airspeed

$$V_i = a_{SL}\left\{5\left[\left(\frac{q_{c_i}}{P_{a_{SL}}}+1\right)^{\frac{2}{7}} - 1\right]\right\}^{\frac{1}{2}}$$

- Mach Number

$$M_i = \left\{5\left[\left(\frac{q_{c_i}}{P_{s_i}}+1\right)^{\frac{2}{7}} - 1\right]\right\}^{\frac{1}{2}}$$

- Where
  - P_{asl} = 29.92126 inches of mercury (Sea Level).
  - P_{as} = Altimeter setting in inches of mercury (local barometric correction).
  - P_{si} = Indicated ambient (static) air pressure from the pressure transmitter in inches of mercury.
  - a_{sl} = 661.48 knots (at sea level).
  - q_{ci} = (P_{ti} - P_{si}).
  - P_{ti} = Indicated total air pressure from the pressure transmitter in inches of mercury.

Displays

- Information needed to be displayed in the traditional analog method.
- Displays designed to convey real-time information.
- One display for the pilot and another display for the copilot.
- Two different screens were requested.
- A touch screen display was used so that the crew could change from one screen to the other.

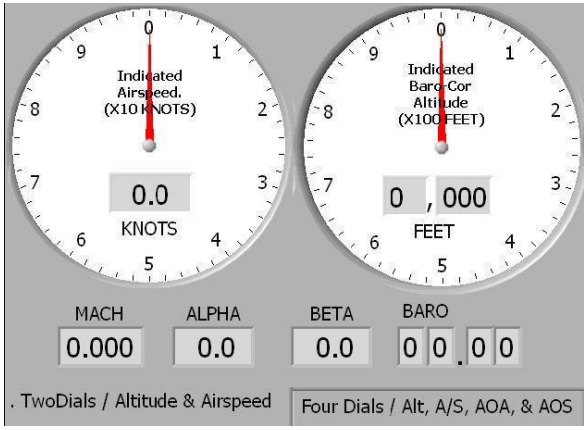

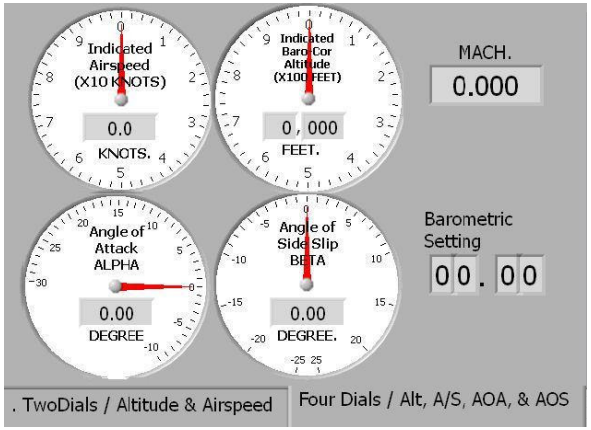

Programming

- Language needed that would handle both equations and graphic displays.
- National Instrument's LabVieweε software was chosen.
- Use of important routines: 'While Loop', 'Formula Node', 'Case Structure Node', and 'Call Library Function Node'
- Had strong graphics for dials and displays.

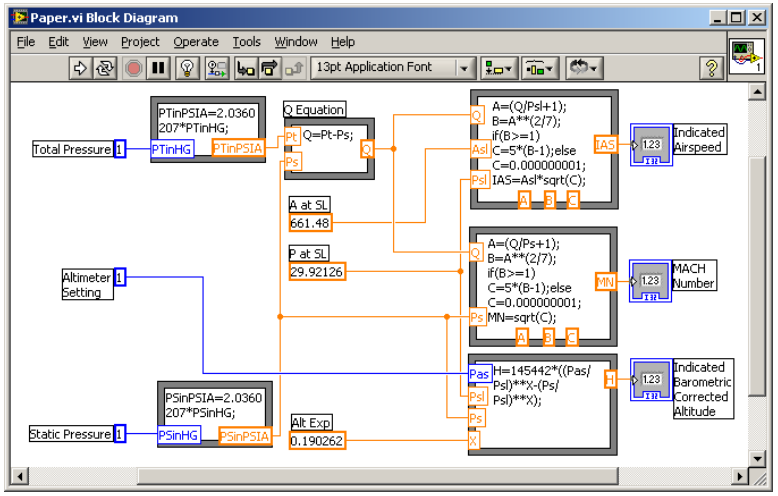

System Considerations

- The system has only what was needed to display the air data parameters.
- The hardware needed to be ruggedized and operate off of aircraft 28 volts direct current.
- There were problems with both Windows XPε and LabViewsε software. They both buffered the digital data from the pressure transmitters. This buffering had to be removed to avoid delays that could have caused system errors.
- The system was not robust enough to be the primary ADS.

Conclusions

- The importance of each parameter needs to be determined.
- As first specified not all requirements can be met.
- Some requirements are more important than others.
- The level of measurement capability needs to be set.
- Responsibility for each parameter needs to be determined.

Questions

?