TG

SEVENTH MEETING

MINUTES
SEVENTH TRANSDUCER WORKSHOP

4 - 6 April 1972

Sandia Laboratories

Albuquerque, New Mexico

TELEMETRY GROUP
RANGE COMMANDERS COUNCIL

KWAJALEIN MISSILE RANGE
WHITE SANDS MISSILE RANGE

NAVAL WEAPONS CENTER
PACIFIC MISSILE RANGE
ATLANTIC FLEET WEAPONS RANGE
NAVAL AIR TEST CENTER

AIR FORCE EASTERN TEST RANGE
AIR FORCE FLIGHT TEST CENTER
AIR FORCE SATELLITE CONTROL FACILITY
SPACE AND MISSILE TEST CENTER
ARMAMENT DEVELOPMENT AND TEST CENTER
AIR FORCE TACTICAL FIGHTER WEAPONS CENTER

Seventh
Transducer
Workshop

4 - 6 April 1972
Sandia Laboratories
Albuquerque, New Mexico [redacted]

TRANSDUCERS COMMITTEE
TELEMETRY GROUP
Range Commanders Council

Published and Distributed by

Secretariat
Range Commanders Council
White Sands Missile Range, New Mexico 88002

CONTENTS

PAGE

INTRODUCTION v

AGENDA vii

ATTENDEES ix

OPENING REMARKS – Pat Walter 1

SESSION I

Measurement System Problems 7
Choosing the Sensor – Dr. Jack J. Shrager 9
Instrumentation Systems for Langley Research Center's Rocket Test Facility – Garland N. Rollins 25
A Measurement System For Aiding Compressor Design – John T. Carroll 41
Diagnostic Problems Related to Measurements Near Underground Nuclear Detonations – Clifford W. Olsen 63
Some Problems Associated With Airblast Pressure Transducers – Michael M. Swisdak, Jr. 88
Discussion Summary, Session I 105

SESSION II

Crystals, Piezoresistance, and Stain Gages 107
Special Factors in the Application of Semiconductor Transducers – J. C. Kicks . . 109
Integral Silicon Transducer Mounting Experience – E. D. Orth and P. Cannon . . 119
Electric Field Assisted Bonding – George Wallis 127
A Semiconductor Strain Gage Moment Detector Transducer – Herman Erichsen . 135
Error Sources in Transducer Crystals – D. B. Davis 147
Discussion Summary – Session II 177

SESSION III

Dynamic and Static Testing and Calibration 179
Automation of Velocity Gage Calibration – T. S. Rathke and M. H. Woodward . . 181
A Transducer Calibration Facility for Dynamic Testing – Stanley G. Gordon and Ora Clark 205
Transient Techniques for Calibrating Fine-Wire Thermocouples at High Temperatures – Edward G. Keshock, William F. Stewart, and S. Franklin Edwards . 231
A Report on the Activity of Committees Involved in Standardization of Transducers and Related Measurements – Dale W. Rockwell and Steve Rogero . 257
Discussion Summary – Session III 271

SESSION IV

Manufacturers' Panel Discussion 273

SESSION IV-a

Quickie Papers — New Techniques 279
Piezoresistive Transducers for Measurement of Transient Dynamic Stress — D. E. Grady, M. J. Ginsberg, and D. R. Curran 281
On Operation of High Working Pressure Differential Pressure Transducers — L. D. Worster 307
The Diffractographic Stain Gage — T. R. Pryor, W. P. T. North 313

SESSION V

Performance Specifications, Standards, and Information Source 317
Static/Dynamic Accuracy Concepts: An Unconventional Viewpoint as Springboard for Discussion — Peter K. Stein 319
Use of the Error Band for Transducer Specifications and Performance Verification — Harry Norton 333
Discussion Summary — Session V 355

SESSION VI

Needs and Plans for Action 361
Discussion Summary 363

APPENDIX 1 — A collection of Boo Boo's 365

INTRODUCTION

The Seventh Transducer Workshop was held at Albuquerque, New Mexico, on 4-6 April, 1972. Mr. W. G. James, Air Force Flight Dynamics Laboratory, was General Chairman of this workshop. Mr. James is an Associate Member of the Transducer Committee-TG-IRIG-which has as its chairman Mr. Patrick Walter, Sandia Corporation. Arrangements in the Albuquerque area were managed by Mr. Joe Quintana, Air Force Weapons Laboratory and Mr. Walter, Sandia.

The Workshop Objectives were:

a. Identification and discussion of current and expected problems, deficiencies, and trends in transducer application, calibration and evaluation.

b. Identification and discussion of promising new techniques in transducer applications.

c. Discussions of transducer misuse, malpractice and application traps for the unwary.

d. Increased mutual understanding between users, manufacturers, and consultants of each others' frustrations, freedoms, constraints, and motivations.

e. Identification of agents, mechanisms, procedures for improvements of communication, standards, etc., among users, manufacturers and consultants.

The Workshop was an audience participation type of meeting with a minimum of time spent listening to formal papers and a maximum time spent discussing trends, problems and techniques. Panels of key personnel were selected to lead and moderate (but not dominate) discussion. The 7th Workshop encouraged attendance and productive dialog between transducer users, manufacturers, and consultants (attendance at previous workshops was closed to manufacturers). The Workshop was keyed for action. The final session was for initiating plans to follow through with efforts to standardize, modify, influence, or research as necessary to correct or reduce problems which were exposed during the earlier sessions.

The Transducer Committee decided to experiment with the inclusion of Boo Boos in this Workshop described as a brief description of a measurement attempt which resulted in large errors in spite of the use of precision equipment. These are submitted anonymously and form a collection of non-recommended non-practices or application traps for the unwary. This collection of Boo Boos is included as Appendix 1.

Changes in the agenda are as follows:

a. Session II: The following papers were not presented: "Preassembled Strain Transducers for Speed and Accuracy" by R. D. Swiler and "Miniature Strain Gage Force Measurement Devices — Design and Applications" by R. F. Wells.

b. Session III:

(1) The paper "Automation of Velocity Gage Calibration" by T. S. Rathke, Sandia Labs, was co-authored by M. H. Woodward, also of Sandia Labs.

(2) "ISA, NBS and IRIG Standards and Procedures" by D. Rockwell, was deleted and in its place, "A Report on the Activity of Committees Involved in Standardization of Transducers and Related Measurements" by D. Rockwell, Navy Metrology Engineering Center and Steve Rogero, Jet Propulsion Laboratory, was presented.

c. Session IV:

(1) The "Quickies – New Techniques" portion of Session III was moved to Session IV-a. The papers originally scheduled for presentation were deleted and the following substitutions were made:

(a) "Piezoresistive Transducers for Measurement of Transient Dynamic Stress" by D. E. Grady, M. J. Ginsberg, and D. R. Curran, Stanford Research Institute.

(b) "On Operation of High Working Pressure Differential Pressure Transducer" by L. D. Worster, Douglas United Nuclear, Inc.

(c) "The Diffractographic Strain Gage" by T. R. Pryor and W. P. T. North, University of Windsor, Canada.

d. Session V:

(1) The Chairman of Session V was Mr. Jack Shrager of the Federal Aviation Agency.

(2) "On Line Calibration" by H. Harmon was deleted.

Seventh TRANSDUCER WORKSHOP

Sponsored by:
The Telemetry Group
Range Commanders Council
4-6 April 1972

Seventh TRANSDUCER WORKSHOP

Objectives:

Identification and **discussion** of current and expected problems, deficiencies, and trends in transducer application, calibration and evaluation.

Identification and **discussion** of promising new techniques in transducer applications.

Discussions of transducer misuse, malpractice and application traps for the unwary.

Increased mutual understanding between users, manufacturers, and consultants of each others' frustrations, freedoms, constraints, and motivations.

Identification of agents, mechanisms, procedures for improvements of communication, standards, etc., among users, manufacturers and consultants.

General Chairman:

W. Gene James
Air Force Flight Dynamics Lab
Wright Patterson AFB, Ohio 45433

513-255-3686

PRELIMINARY PROGRAM

Monday, 3 April 1972

8:00 PM — Social Hour - Courtesy Chamber of Commerce & Transducer Committee - All attendees welcome.

Tuesday, 4 April 1972

0730 — Registration

0830 — Welcome, Introductions

0900 — Session I: Measurement Systems Problems

Chairman: Mr. Otmar Stuetzer, Department Manager, Exploratory Test Instrumentation, Sandia

Panel Members and Papers' Briefs 10 Minutes Each):

J. J. Shrager, FAA "Choosing the Sensor (Too Much Transduction)"

G. N. Rollins, NASA "Instrumentation Systems for Langley Research Centers' Rocket Test Facility"

J. T. Carroll, Pratt & Whitney, "A Measurement System for Aiding Compressor Design"

C. W. Olsen, Lawrence Radiation Lab, "Diagnostic Problems Related to Measurements Near Underground Nuclear Detonations"

M. M. Swisdak, Jr., U. S. Naval Ordnance Lab, "Some Problems Associated with Airblast Pressure Transducers"

1000 — Session I Open Discussion

1130	*Quickie Boo Boos and Discussion*
1200	*LUNCH*
1330	Session II: Crystals, Piezoresistance, and Strain Gages

Chairman: Mr. Joe V. Quintana, Instrumentation Engineer, AFWL

Panel Members and Papers' Briefs:

J. C. Kicks, Kulite Semiconductor Prods, "Special Factors in Application of Semiconductor Transducers"

E. D. Orth & P. Cannon, GE Instruments Division, Lynn, Mass., Transducer Mounting Experience

S. Wallis, P. R. Mallory Co., Electric Field Assisted Bonding

H. Erichsen, Tyco, "A Semiconductor Strain Gage Moment Detector Transducer"

R. D. Swiler, Boeing, "Preassembled Strain Transducers for Speed and Accuracy"

R. F. Wells, NASA, "Miniature Strain Gage Force Measurement Devices - Design and Applications"

D. Davis, Sandia, "Error Sources in Transducer Crystals"

1430	Session II Open Discussion
1630	Quickie Boo Boo's and Discussion

Wednesday, 5 April 1972

0830	Session III: Dynamic and Static Testing and Calibration

Chairman: Mr. Paul Lederer, Project Leaser, National Bureau of Standards

Panel Members and Papers' Briefs:

T. S. Rathke, Sandia Labs, "Automation of Velocity Gage Calibration"

S. G. Gordon, Boeing, "Transducer Calibration Facility for Dynamic Testing"

E. G. Keshock, Old Dominion University, "Transient Technique for Calibrating Fine Wire Thermocouples at High Temperatures"

D. Rockwell, Gen Dynamics "ISA, NBS and IRIG Standards & Procedures"

0900 Session III Open Discussion

1030 Quickies - New Techniques

L. D. Worster, Douglas - United Nuclear Inc., "On the Operation of High Working Pressure Differential Pressure Transducers"

J. J. Morrison, University of California, "An Integrated Vibration Amplitude Recording System"

T. R. Pryor, University of Windsor - Canada "A New Transducing Technique"

LUNCH

1200 - 1830 Free Bus Tour of Nearby New Mexico and Opportunity for Dinner

1930 Session IV: Manufacturers' Panel

Chairman: Mr. Peter K. Stein, Consultant, Arizona State University

Panel Members:

Bell and Howell
Endevco
Kistler Instrument Co.
Kulite Semiconductor Products, Inc.
Rosemount Engineering Co.

Thursday, 6 April 1972

0830 Session V: Performance Specifications, Standards and Information Sources

Chairman: Mr. Harry N. Norton, Jet Propulsion Lab

Panel Members and Papers' Briefs:

P. K. Stein, Consultant, "Static/Dynamic Accuracy Concepts"

H. N. Norton, JPL, "Error Band Concept"

H. Harmon, NASA, "On-Line Calibration

0900 Session V Open Discussion

1030 Session VI: Definition of IRIG Transducer Committee Efforts to Implement Workshop Goals and Conclusions

Chairman: Pat Walter, Chairman, Transducer Committee, TG, RCC

Panel Members: Transducer Committee

1200 END OF WORKSHOP

GENERAL INFORMATION

Registration

Advance registration, using the enclosed form, must be received before March 17, 1972. The registration fee ($6.00) includes a copy of the proceedings, and coffee, cokes, and doughnuts. The fee must accompany all registrations. Checks (no purchase orders please) should be made payable to the SEVENTH TRANSDUCER WORKSHOP. Late registration will be possible at the registration desk, Holiday Motel (Midtown) on April 4.

Motel Accommodations

The Holiday Inn of Albuquerque (Midtown) is the official Motel for the workshop. Special rates are set for Workshop attendees, if requested at the time of registration. Requests for room reservations should be sent by March 17th directly to Holiday Inn of Albuquerque-Midtown, 2000 Menaul Blvd., & University Ave., Albuquerque, New Mexico 89107.

Meals

The registration fee includes no meals, and no Workshop banquets or luncheons are planned. Meals are available at the motel and in the many fine restaurants in the Albuquerque area.

Additional Information

Additional information may be obtained from the General Chairman or from:

Mr. Paul Lederer Phone: 301-921-2486
Div. 425.03
NBS
Washington, D. C. 20234

or

Mr. Pat Walter Phone: 505-265-5785
Div. 7511, Box 5800
Sandia Laboratories
Albuquerque, New Mexico 87115

Meeting Room

All sessions will be held in the Auditorium of the Holiday Inn.

Proceedings

Each registrant will receive one copy of the proceedings as soon as available following the Workshop.

Background Information

This workshop is an AUDIENCE PARTICIPATION type of meeting with a minimum of time to be spent listening to formal papers and a maximum time to be spent discussing trends, problems and techniques. Panels of key personnel have been selected to lead and moderate (but not dominate) discussion.

Concern has been expressed that prior meetings emphasized how clever we all are while ignoring how ignorant. It is proposed that the workshop will be unproductive if all attendees agree on all points; it will equally be unproductive if attendees only disagree and argue. The 7th Workshop will encourage attendance and productive dialog between transducer **users, manufacturers,** and **consultants,** even though attendance at previous workshops was closed to manufacturers. Now is the time to expose your **constructive** suggestions for correcting some of your pet peeves and difficulties with transducers.

This workshop is keyed for action. The final session is for initiating plans to follow through with efforts to standardize, modify, influence, or research as necessary to correct or reduce **your** problems which develop during the earlier sessions.

ATTENDEES

Amin, Jayendra J.
Arizona State University
(Meas. Lab.)
1028 E. Orange No. 9
Tempe, Arizona 85281
Tel. (602) 968-0936

Amonette, Ed
Aztec Enterprises
829 Pennsylvania, NE
Albuquerque, New Mexico 87110
Tel. (505) 255-2440

Anderson, A. B.
Sandia Laboratories
361 Coyote Lane, SE
Albuquerque, New Mexico 87123
Tel. (505) 299-2423

Arlow, H. Duane
Sandia Laboratories
Division 9323
P. O. Box 5800
Albuquerque, New Mexico 87115
Tel. (505) 264-6024

Aronson, Philip M.
Naval Ordnance Lab.
White Oak, Silver Spring, MD 20910
Tel. 495-8251 Aut: 233-8251

Babiarz, Alec J.
Arizona State University
1011 E. Lemon, Apt. 8
Tempe, Arizona 85281
Tel. (602) 966-2646

Bailey, Kenneth F.
EG&G
115 Winged Ft. Pl.
San Ramon, California 94583
Tel. (415) 837-5381

Baker, Thomas
U. S. Naval Weapons Lab.
Dahlgren, Virginia 22448
Tel. 663-8471

Baum, Dr. Neal
AFWL (DEX)
Kirtland AFB, New Mexico 87117
Tel. 946-3466 and 247-1711

Benedict, Roger
Air Force Rocket Prop. Lab.
AFRPL—TSBC
Edwards AFB, California 93523
Tel. (714) 553-2278 Aut: 898-1640

Bickle, L. W.
Sandia Laboratories
Division 1442
P. O. Box 5800
Albuquerque, New Mexico 87115
Tel. (505) 264-4290

Brennan, James A.
National Bureau of Standards
Cryogenics Division, 275.06
Boulder, Colorado 80302
Tel. (303) 499-1000, ext. 3611

Brewer, Billy C.
AFWL (CERF)
P. O. Box 188, University Station
Albuquerque, New Mexico
Tel. (505) 264-4644

Brooks, R. O.
Sandia Laboratories
3542 California, NE
Albuquerque, New Mexico 87110

Cannon P.
General Electric Company
40 Federal Street
Lynn, Massachusetts 01910
Tel. (617) 594-7066

Carroll, John T.
Pratt & Whitney
400 Main Street
E. Hartford, Connecticut 06424
Tel. (203) 565-8725

Chafin, Carl
RSA, Box 30066
Albuquerque, New Mexioc 87110
Tel. (505) 265-7631

Change, Nicholas D.
PCB Piezotronics
5800 Transit Road
Depew, New York 14225
Tel. (716) 684-0001

Clarke, Harry
Naval Air Test Center
TSD, NATC
Patuxent River, MD 20670
Tel. (301) 863-4195 Aut: 356-4195

Clark, Robert F.
Endevco
801 S. Arroyo Parkway
Pasadena, California 91109
Tel. (213) 795-0271

Clemente, Tony
BBN
50 Moulton Street
Cambridge, Massachusetts 02138

A. B. Cole
Org. 7511
Sandia Laboratories
Albuquerque, New Mexico 87115
Tel. (505) 265-5785

Colyer, William H.
AFSWC Kirtland
6012 Zimmerman Ave, NE
Albuquerque, New Mexico 87110
Tel. (505) 256-0131
KAFB 247-1711, ext. 3800

Cox, Kenneth D.
Naval Weapons Center
Code 4534
China Lake, California 93555
Tel. 898-1700-7427

Craig, W. Dale
U. S. Naval Weapons Laboratory
Dahlgren, Virginia 22448
Tel. 663-8471

Craw, George
USAF
6511th Test Group, NAF
El Centro, California 92243
Tel. (714) 339-2474

Davis, David B.
Sandia Laboratories
9505 Woodland, NE
Albuquerque, New Mexico 87112
Tel. (505) 264-8952

Cox, Sam S.
Bell & Howell, Instruments Div.
360 N. Sierra Madre Villa
Pasadena, California 91109
Tel. (213) 796-9381

Davies, Lee E.
EG&G
2801 Old Crow Canyon Rd
San Ramon, California 94583

Davis, Paul M.
Naval Air Test Center
TSD, NATC
Patuxent River, MD 20670
Tel. (301) 863-4271 Aut: 356-4271

Desaulniers, Claude
Hydro-Quebec Research Institute (IREQ)
1800 Montee Ste-Julie
Varennes, Quebec, Canada
Tel. 1-514-652-8320

Donovan, R. P.
Research Triangle Institute
P. O. Box 12194
Research Triangle Park, NC 27709
Tel. (919) 549-8311

Dykstra, John D.
USA Aberdeen Research & Development Center
Aberdeen Proving Ground, MD 21005
Tel. (301) 278-2622 Aut: 870-2622

Erichsen, Herman
Tyco Instrument
150 Coolidge Avenue
Watertown, Massachusetts

Farestad, Muns
A.S.U.
2615 E. Brill No. 1
Phoenix, Arizona 85008
Tel. 275-4095

Fischer, John E.
General Electric
Bldg. 700 E-51
Cincinnati, Ohio 45215
Tel. 513X243-4211

Flavin, Daniel
Teledyne Taber, 455 Bryant St.
N. Tonawanda, New York 14220
Tel. (716) 694-4000

Freman, Richard E.
Air Force Avionics Lab/RSE
Wright Patterson AFB, Ohio 45433
Tel. (513) 255-3987/78-55987

Fuselier, Pierre
Lawrence Livermore Lab
P. O. Box 808
Livermore, California 94550
Tel. (415) 447-1100, ext. 8238

Galbraith, Lee K.
Sandia Laboratories
Org. 1442
P. O. Box 5800
Albuquerque, New Mexico 87115
Tel. (505) 264-2384

Giglio-Tos, Louis
ARDC—BRL, Aberdeen Proving Ground
Aberdeen, Maryland 21005
Tel. (301) 278-3679 Aut: 870-3679

Gordon, Stan
The Boeing Co., M/S 84/45
Box 3999
Seattle, Washington 98124
Tel. (206) 773-1580

Gottlieb, Philip
North American Rockwell - Rocketdyne
Box 548
McGregor, Texas 76657
Tel. (817) 840-2811

Grady, Dennis
Stanford Research Institute
Menlo Park, California
Tel. 326-6200

Gray, Grant W.
AFSWC Kirtland
1328 Freeman, NW
Albuquerque, New Mexico 87107
Tel. (505) 344-2541

Hatch, Melton A.
EG&G, Box 204
San Ramon, California 94583
Tel. (415) 837-5381

Hembree, Thomas P.
North American Rockwell
L. A. Airport
Los Angeles, California 90009
Mail Code BB28
Tel. (213) 670-9151, ext. 2711

Higgins, Philip
Sandia Laboratories
P. O. Box 5800
Albuquerque, New Mexico 87115
Tel. (505) 264-5068

Hilten, John S.
National Bureau of Standards
Bldg. 225, Room A351
Washington, D.C. 20234
Tel. (301) 921-2486

Jenkerson, William
AFSWC Kirtland
R-1 Box 205
Belen, New Mexico 87002
Tel. (505) 247-1711, ext. 3860

Kalinowski, John A.
EG&G
2801 Old Crow Canyon Road
San Ramon, California 94583
Tel. (415) 837-5381

Keshock, Edward G.
Old Dominion University
Hampton Blvd.
Norfolk, Virginia 23508
Tel. (703) 489-8000, ext. 375

Kicks, John C.
Kulite Semiconductor Products, Inc.
1039 Hoyt Avenue
Ridgefield, New Jersey 07657
Tel. (201) 945-3000

Kistler, Walter P.
Kistler Instruments
Overlake Industrial Park
Redmond, Washington 98052
Tel. 885-8202

Lally, R. W.
PCB Piezotronics
7 Eagle Drive
Orchard Park, New York 14127
Tel. 662-7794

L. L. Lathrop
Org. 7511
Sandia Laboratories
Albuquerque, New Mexico 87115
Tel. (505) 265-5785

Lederer, Paul S.
Division 425.03
National Bureau of Standards
Washington, D.C. 20234
Tel. (301) 921-2486

Lee, Homer
EG&G, Box 204
San Ramon, California 94583
Tel. (415) 837-5381

Linnenbrink, Thomas E.
GARD/GATX
7449 N. Natchez Avenue
Niles, Illinois 60648
Tel. (312) 647-9000, ext. 358

Magee, Dr. Thomas
Stanford Research Institute
Menlo Park, California 94025
Tel. 326-6200, ext. 3201

Maier, Len
Endevco
801 S. Arroyo Parkway
Pasadena, California 91109
Tel. (213) 795-0271

Mallon, Joseph R., Jr.
Kulite Semiconductor
1030 Hoyt Avenue
Ridgefield, New Jersey 07657
Tel. (201) 945-3000

Maybach, Jim
Rosemount, Inc.
P. O. Box 35129
Minneapolis, Minnesota 55044
Tel. (612) 941-5560

McMurtry, Wayne
UNM CERF
P. O. Box 188
University Station
Albuquerque, New Mexioc 87106
Tel. (505) 264-4644

Mikels, Robert L.
Detroit Diesel Allison Div, GMC
P. O. Box 894 - Mail Stop S6
Indianapolis, Indiana 46206
Tel. (317) 243-4067

Montoya, Arsenio P.
Sandia Laboratories
Division 1914
P. O. Box 5800
Albuquerque, New Mexico 87115
Tel. (505) 264-2754

Morrison, Jasper
Lawrence Livermore Laboratory
P. O. Box 808, L-126
Livermore, California 94550
Tel. (415) 447-1100, ext. 8114

Newell, Darrell
AFWL (DEX)
Kirtland AFB, New Mexico 87117
Tel. (505) 946-3466

Nye, Capt. James W.
Box 106, 6511th Test Group
NAF
El Centro, California 92243
Tel. 339-2681

Olsen, Clifford W.
Lawrence Livermore Laboratory
P. O. Box 808
Livermore, California 94550
Tel. (415) 447-1100, ext. 7091

Orth, Edward D.
General Electric Co.
40 Federal Street (2ML3)
Lynn, Massachusetts 01910
Tel. (617) 594-7329

O'Shea, Denny
Endevco
801 S. Arroyo Parkway
Pasadena, California 91109
Tel. (213) 795-0271

Outlaw, Bruce K. E.
NASA Langley Research Center
2101 Cunningham Drive, Apt. 204
Hampton, Virginia 23366
Tel. (703) 827-3535 (Work)

Pickett, S. F.
U.N.M. Cert.
P. O. Box 188, University Station
Albuquerque, New Mexico 87106
Tel. (505) 264-4644

Preston, Roger G.
EG&G, Box 204
Ran Ramon, California 94583
Tel. (415) 837-5381

Quintana, Joe V.
Air Force Weapons Laboratory (DEX)
Kirtland AFB, New Mexico 87117

Rathke, Tom
Sandia Laboratories
Box 5800, Division 9344
Albuquerque, New Mexico 87115
Tel. (505) 264-5468

Rockwell, Dale W.
Navy Metrology Engr. Center
1675 W. Mission Blvd.
Pomona, California 91766
Tel. (714) 629-5111, ext. 8229

Rodgers, Thomas N.
USAF/AFSC/ADTC
ASTC/TSGAS
Eglin AFB, Florida 32542
Tel. 1-904-882-2995 or 872-2995

Rogero, Steve
JPL
P. O. Box 458
Edwards, California 93523
Tel. (805) 277-4520

Rollins, Garland N.
NASA, Langley Research Center
Mail Stop 236
Hampton, Virginia 23365
Tel. (703) 827-3234

Rosen, Gerald J.
Grumman Aerospace Corp.
Calverton, New York 11933
Tel. 516 PA 7-1500, ext. 217

Russell, John D.
Naval Missile Center
P. O. Box 12, (Code 5221)
Pt. Mugu, California 93041
Tel. (805) 982-7713

Rust, R. F.
Rustco Enterprises
P. O. Box 11261
Albuquerque, New Mexico 87112
Tel. (505) 296-6474

Shay, William M.
Lavvrence Livermore Laboratory
Box 808
Livermore, California 94550

F. Schelby
Sandia Laboratories
Division 7511
P. O. Box 5800
Albuquerque, New Mexico 87115
Tel. (505) 264-5785

Schneider, Josef F.
AFWL (DEX)
Kirtland AFB, New Mexico 87117
Tel. (505) 247-1711

Schulz, George L.
Cert. U.N.M.
Box 188 - University Station
Albuquerque, New Mexico 87106
Tel. (505) 264-4644, ext. 43

Shrager, Dr. Jack J.
Federal Aciation Administration DOT
National Aviation Facilities Experimental Ctr
Atlantic City, New Jersey 08405
Tel. (609) 641-8200, ext. 2665 Aut: 234-1596

Simms, Harry M.
U.N.M. Cert.
Box 188 - University Station
Albuquerque, New Mexico 87106

Slice, Roy W.
EG&G

Smith, Jack
Kirtland AFB, New Mexico 87117
Tel. (505) 247-1711, ext. 3800

Snider, Leon
Civil Eng. Research Facility
Box 188 - University Station
Albuquerque, New Mexico 87106

Sonner, John B.
Naval Aerospace Recovery Facility
Naval Air Facility
El Centro, California 92243

Stein, Peter
Arizona State University
Engineering Center
Tempe, Arizona 85281
Tel. (602) 965-3124

Stern, William R. (Bill)
Setra Systems, Ind.
12 Huron Drive
Natick, Massachusetts 02173
Tel. (617) 655-4645

Stuetzer, O. M.
Sandia Laboratories
Org. 1440
P. O. Box 5800
Albuquerque, New Mexico 87115
Tel. (505) 264-1467

Sullivan, Roy
AFSWC - Kirtland
9710 Woodland, NE
Albuquerque, New Mexioc 87112

Svenson, K. D.
Sandia Laboratories
P. O. Box 5800
Albuquerque, New Mexico 87115
Tel. (505) 264-5371

Swisdak, M. M., Jr.
Naval Ordnance Laboratory
Bldg. 336-113
White Oak, Silver Spring, MD 20910
Tel. (301) 495-8376 Aut: 233-8376

Thomas, Charles E.
AFFDL/FYS
Wright Patterson AFB, Ohio 45433
Tel. (513) 255-2543 – 785-2543

Thomas, Ronald L.
Endevco
801 S. Arroyo Parkway
Pasadena, California 91109
Tel. (213) 795-0271

Thorstensen-Woll, K. J.
Computing Devices of Canada Lt.
Box 8508
Ottawa, Ontario K1G 3M9
Canada
Tel. (613) 829-1800, ext. 305

Tse, Francis S.
University of Cincinnati
Mail Location 72
Cincinnati, Ohio 45221
Tel. (513) 475-2249

Tucker, William K.
Sandia Laboratories
Division 9324, P. O. Box 5800
Albuquerque, New Mexico 87115
Tel. (505) 264-1579

Wallis, George
P R Mallory
NW Industrial Park
Burlington, Massachusetts

Walter, P. L.
Sandia Laboratories
Division 7511, P. O. Box 5800
Albuquerque, New Mexico 87115
Tel. (505) 265-5785

Whittier, Robert M.
Endevco
801 S. Arroyo Parkway
Pasadena, California 91109
Tel. (213) 795-0271

Woodward M.
Sandia Laboratories
Division 9344
P. O. Box 5800
Albuquerque, New Mexico 87115
Tel. (505) 264-4139

Zimmermann, Richard E.
Arizona State University
1544 W. 5th Street
Tempe, Arizona 85281
Tel. (602) 965-3939

Zuehlke, Arthur A.
Aerospace Corporation
1111 Mill Street
San Bernardino, California

OPENING REMARKS

Pat Walter, Chairman, RCC Transducer Committee

This Workshop is conducted by the Transducer Committee of the Telemetry Group, Range Commanders Council (RCC). The following charts illustrate the membership in the RCC, the organizational structure, Telemetry Group Committees and Transducer Committee Objectives.

This 7th Transducer Workshop is unique in the participation of both transducer users and manufacturers. The final session is devoted to determination of the nature and degree of transducer problems and for identification of means by which the Transducer Committee can and must aid the transducer community in solution of these problems.

TELEMETRY GROUP COMMITTEES

1. Antenna Systems
2. Data Multiplex
3. Glossary
4. Membership
5. Recorders and Reproducers
6. Requirements
7. Transducers
8. Transmitter/Receiver

TRANSDUCER COMMITTEE OBJECTIVES

OBJECTIVES:

This committee will inform the Telemetry Group of significant progress in the field of telemetry transducers; maintain any necessary liaison between the Telemetry Group and NBS and their transducers program or any other related telemetry transducer efforts; coordinate Telemetry Group activities with other professional technical groups; collect and pass on techniques of measurement, evaluation, reliability, calibration, reporting, and manufacturing; and recommend uniform practices for calibration, testing, and evaluation of telemetry transducers.

SESSION 1

MEASUREMENT SYSTEMS PROBLEMS

Mr. Otmar Stuetzer, Chairman, Sandia

CHOOSING THE SENSOR
(Too Much Transduction)

by

Dr. Jack J. Shrager

Federal Aviation Administration
National Aviation Facilities Experimental Center
Atlantic City, New Jersey 08405

The content of this paper expresses the personal opinion of the author, and does not necessarily reflect the thinking or policy of the Federal Aviation Administration.

Choosing the Proper Sensor
(Too Much Transduction)

Jack J. Shrager

ABSTRACT

The need for careful experimental design prior to selecting the parameters to be measured are reviewed. Simplicity in transduction as it relates to the need, based on the applicable statistical techniques, are developed to guide the user. The means of not only reducing initial costs, but the reduction in overall costs based on the first two points shown as the feedback in the experimental design. Effective use of existing publications, such as the ISA Transducer Compendium, in developing cost effectiveness are delineated. The objective of this paper is to enhance the user's requirement by providing the guidelines to good sensor selection to meet parametric requirements.

CHOOSING THE SENSOR
(Too Much Transduction)

by

Dr. Jack J. Shrager

Introduction

The past three decades has seen a monumental growth in the scientific tools available to the research scientist and the engineering experimentalist.

Brilliant and painstaking investigations by individual physicists and engineers in various universities and laboratories resulted in the development of a large variety of sensors using different and unique transduction techniques. The scientific instrumentation industry kept close pace with this technology and as a result, we find an almost infinite variety of transducers, recorders, data processors, and computers at our beck and call.

The experimental physicists and research engineer now had the tools to resolve a great many scientific problems. The variety was and is such that experimental work was approaching "push-buttonism." Scientific instrumentation technology was providing equipment whose accuracies exceeded the experimental requirement. The most difficult problem seemed to be going through the several cataloges and selecting the instrumentation equipment -

AN EXPERIMENTALIST'S UTOPIA?

Let's backtrack. The scientific investigator was initially schooled to approach a technical problem or question in an orderly, inquisitive, unbiased manner. He would (1) restate the literal question in scientific notation, (2) expand this statement to determine the significant physical terms requiring evaluation, (3) establish the experimental procedures to accomplish the evaluation, (4) assemble and setup the apparatus, including the sensors and related instrumentation, necessary to conduct the experiment, (5) analyze the experimental results, and (6) report the results to the community of interest.

The requirements for scientific exploration have not changed, but through scientific ignorance, experimental laxity, or misuse of instrumentation technology, in all too many cases, a shamble of logical experimentation has resulted. Experimental costs have risen to

unacceptable heights, manpower requirements knew no limits, experiments were more and more dictated by the measurement system's capability intricacies, sophistication, and availability rather than experimental need -

A SCIENTIFIC UTOPIA?

We find the experimenter often abrogating his training as he arrives at step "4" above, specially when it comes to the scientific instrumentation equipment. When he establishes his transducer requirements, the basis frequently is (1) the best or most expensive transducer which can be procured, (2) the one recommended by the last or only sales representative

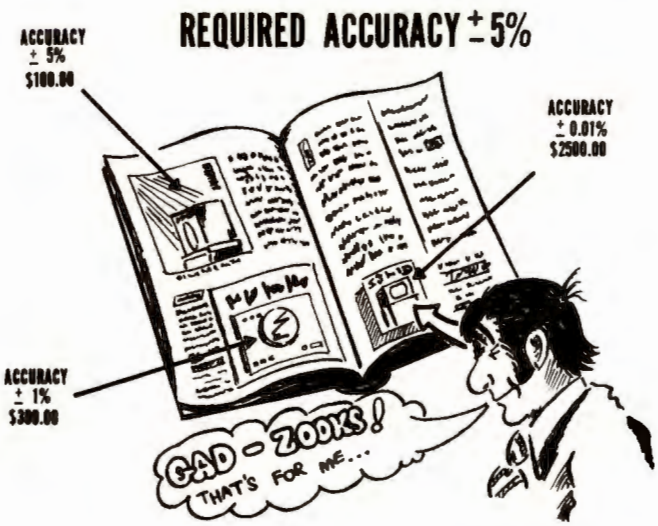

who visited him, (3) one which had been employed by a colleague or associate in a different and often unrelated experiment, or (4) one which was located in the storeroom.

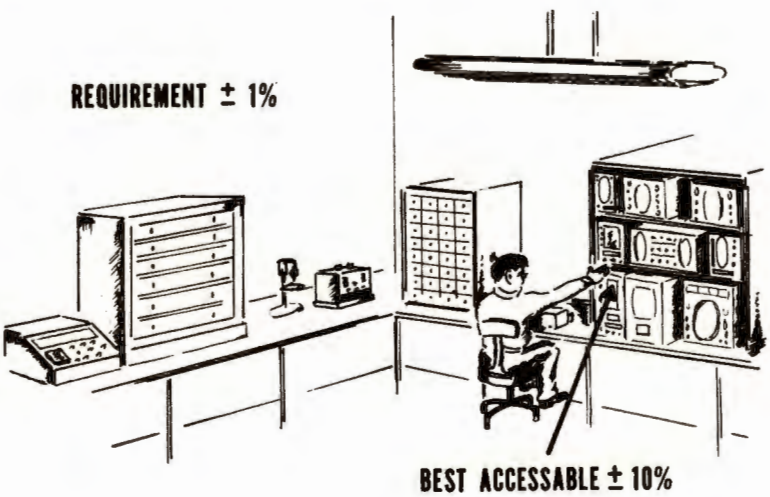

The selection may be subject to revision as the experimenter projects the burden of step "5." The investigator evaluates the several techniques based on (1) that which places the least burden on his personnel time,

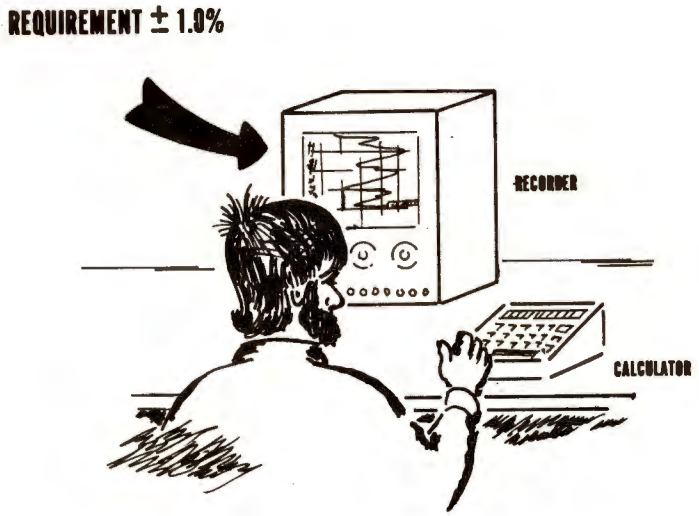

(2) that which is compatible to automatic recording and processing equipment, or

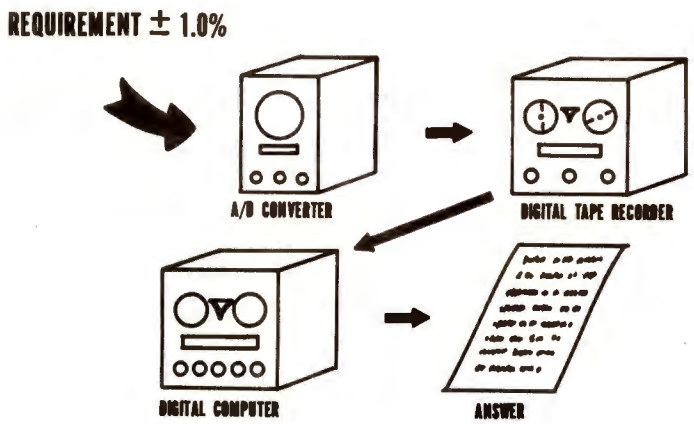

(3) that which is available in the storeroom. If necessary, he will often modify his sensor selection to accommodate this projection.

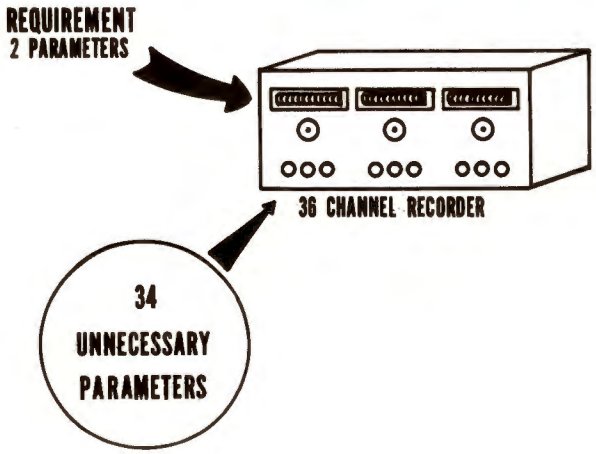

Finally, the investigator prepared a proposed program to the sponsor or management. Recognizing the requirement of justifying his proposal, the scientist modified the objective of the experiment or statement of the experiment in step "1" to support the experimental design. Thus, the final experiment often reflected the objectives as modified by the sensor system selected. Thus, in the end run, the selection of the transducer has altered the experiment.

What the preceding suggests is that erroneous sensor selection would have been reflected in:

1. Inadequate or overly complex experimental designs.

2. Higher experimental costs due to premium sensor selection.

3. Higher experimental costs due to peripheral instrumentation equipment necessary to utilize the premium sensor.

4. An increase in automatic analysis equipment to supplement the optimum performance measurement system.

5. Longer time requirements for experiment preparation.

6. Additional manpower and skills to support a given experiment.

7. An increase in time from experimental inception to completion.

8. A rising inventory of transducer and measurement equipment with a sharp decrease in equipment utilization.

Conversely, using a transducer which is inadequate for the experiment just because it is available should probably produce the following results:

1. Compromise in project objects, thus necessitating subsequent additional experimentation.

2. An increase in the number of tests to resolve the objectives through replication. This would increase the data collection and analysis burden.

3. An increase in the need for peripheral equipment which would be compatible with automatic data processing equipment.

4. An increase in automatic analysis equipment to cope with the increase in data to be analyzed. Steps 5, 6, and 7 would be similar to that resulting from the selection of the unnecessarily sophisticated sensor.

We have seen the costs of experiments rising sharply. The complexity of experiments to produce meaningful results has increased. Duplication of experimental efforts has risen because the original questions to be solved were not answered. The inventories of scientific equipment and the decrease in their utilization is the experience of most organizations. The manpower and lapse time required to get the desired information has become prohibitive. The scientist has come under sharp criticism -

A SCIENTIFIC UTOPIA ?

NO

A SCIENTIFIC CASTROPHE!

The Evidence

The early 1950's saw the rapid growth of the major customer of scientific measurement devices; namely, AEROSPACE. We had already developed (1) supersonic aircraft, (2) large multi-engine jet bombers and transports, and (3) missiles and their complex tracking and guidance systems.

Our tools at this period in time were largely mechanical transducers as bourdon tube pressure gages or manometers, and a limited number of potentiometric or strain gage-type transducers.

The largest capacity analog recorders were 18-channel with the majority less than 10. Data reduction was manual by use of a ruler, and analysis used the slide ruler or desk calculator.

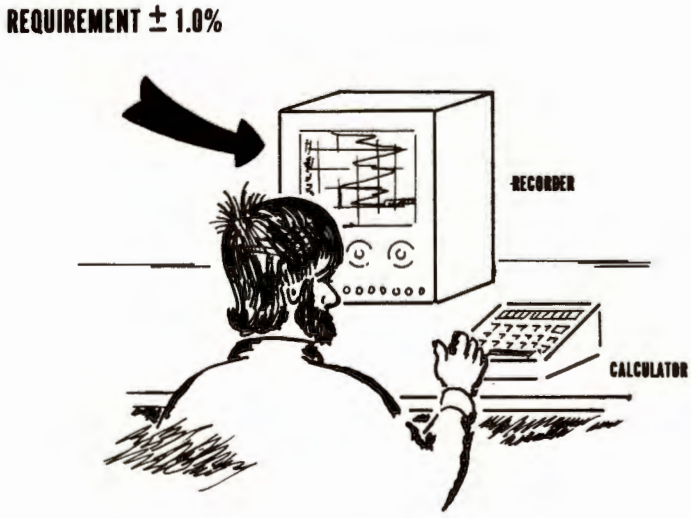

The early disease of scientific measurement syndrome was detectable even then. How often did we hear "Oh, you can record five more parameters, well let's measure ....."

Then came the development of the 36-channel recorders and other types of electrical transducers to measure those things previously measured by the mechanical devices. Did we eliminate the mechanical measurement? No! We duplicated them and worse, because of the additional reduction time required due to the increase in the number of parameters recorded, the experimenter often used the hand-recorded information of the mechanical transducers using only the electrically transduced information in support.

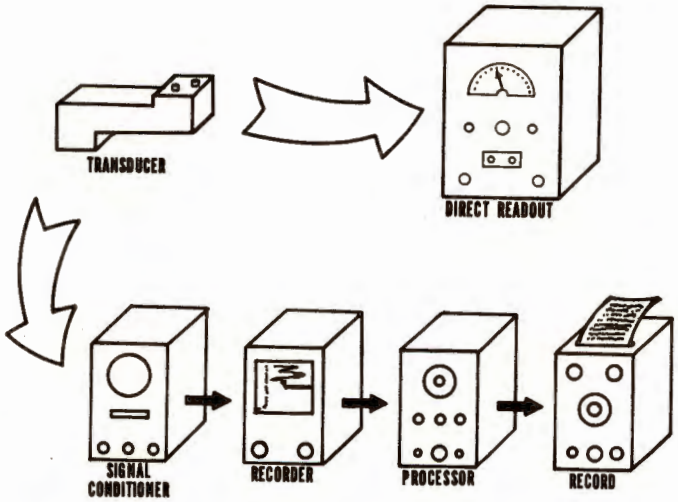

We also heard the introduction of a new phrase "Oh, you can record or display more, well can we have two load cells, flowmeters, etc. to check on the ....." This was a means of improving accuracy through duplication or so it was thought.

Then we really made progress. Along came the digital computer, the analog-to-digital converters, digital and analog tape recorders and now the numbers and types of transducers were as varied as the structure and shape of snow flakes. The new cry was "measure everything,

process automatically and printout tables, graphs, histograms, bar charts, ..."

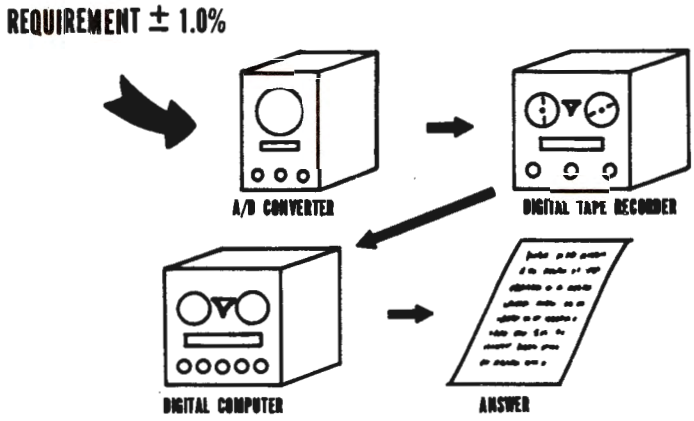

Supposedly if one generates enough paper, the answer will be pressed out. —— "Gentlemen, please let's not squeeze the Charmin." ——

The Experiment

Let us examine several methods of satisfying a requirement to evaluate the vortex systems generated by an aircraft.

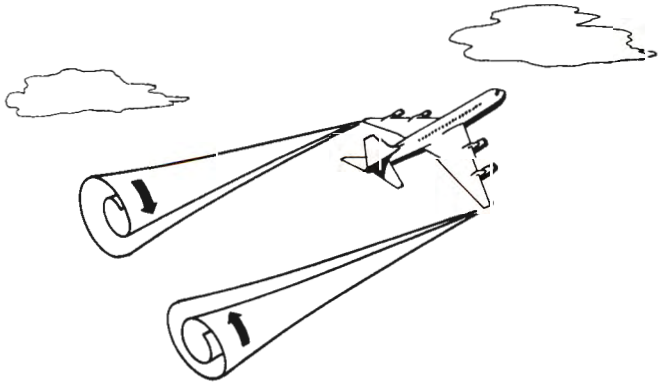

Shown in Figure 1 is a system which uses smoke as the transducer to make the system visible to the eye, a clock to provide a time reference, and a standard motion picture camera as the recording medium.

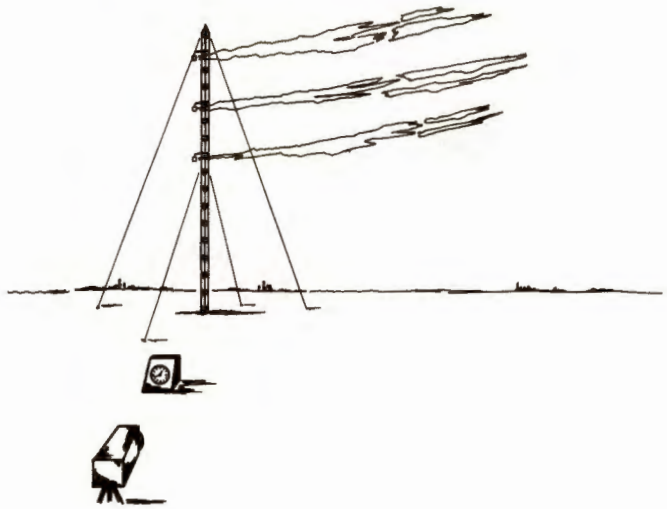

The reduction of this type of data can be accomplish using a ruler and magnifying glass, a manually-operated film reader or an automatic film reader. Note that in this case, the type of transducer dictated the recording medium, but not necessarily the data reduction techniques. The data reduction technique selected could be dependent on the transducer selection if the replication requirements are large due to either the transducer's limitations or the recording medium's limitations.

Figure 2 shows the same initial transduction concept supplemented by cup-type anemometers to measure the direction and magnitude of air mass prior to, during, and after the passage of the vortex.

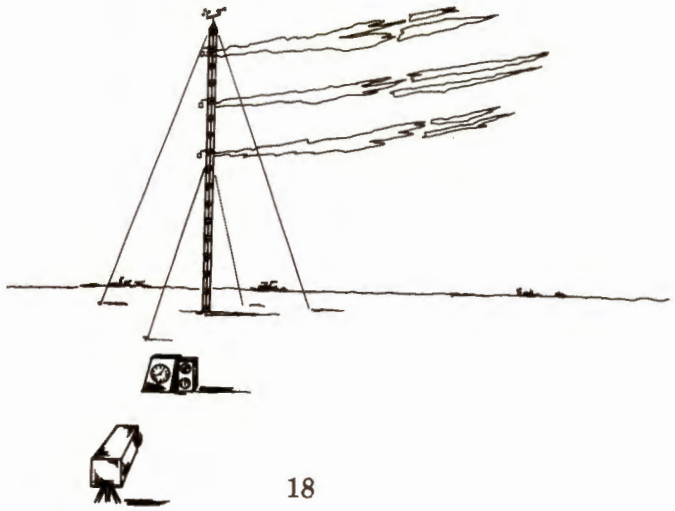

The later system produced an analog signal whose readout was visually read indicators. In this example, there are two additional parameters measured. Again, the transducers dictate the recording technique. The other new factor introduced in this system is transducer performance characteristics. Therefore, if the accuracy, sensitivity, repeatability, frequency response, etc. of the transducers are to be realized, the sensors also dictate these characteristics of the recording medium.

Figure 3 shows a system which is similar to that of "2," but reflects an increase in the number of wind velocity sensors being employed.

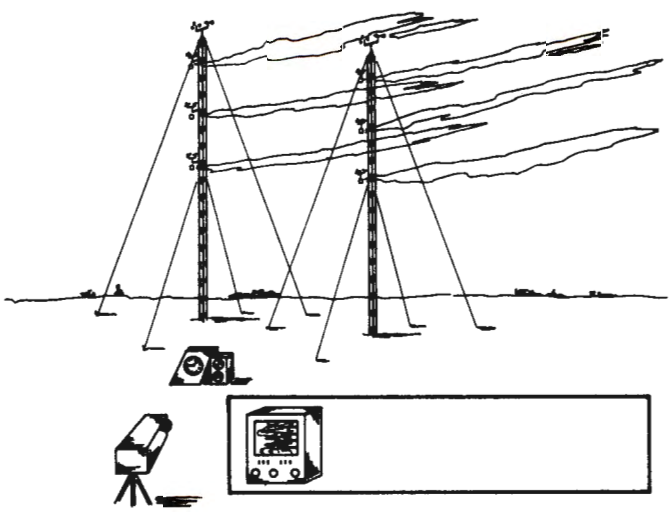

Due to the number of similar parameters being measured, the number of transducers being used dictates the recording medium. The addition of the multi-channel recorder now could influence the experiment if its numerical capacity exceeds the initial parametric requirements of the experiment.

Shown in Figure 4 is still another method for measuring the vortex system.

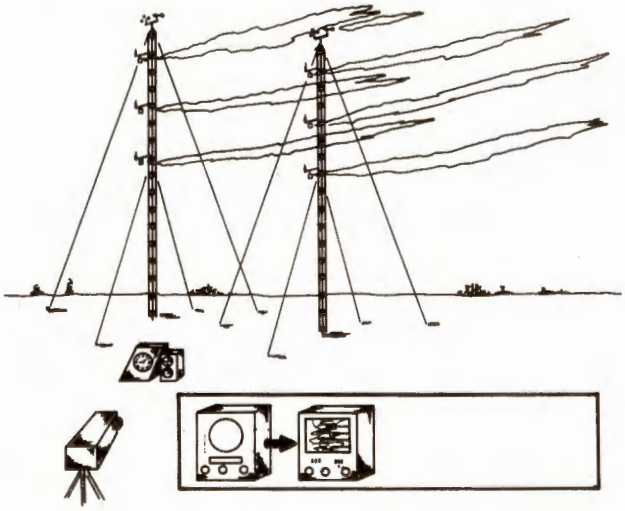

This system reflects an increase in the transducer performance characteristics, and an increase in the number of measuring stations.

Thus, these electronic velocity measuring transducers have now replaced the electro-mechanical-type shown in Figures 2 and 3, but not the visual transducers. The transducers not only dictate the recording medium's capacity and accuracy, but, due to it's response characteristics and their number, the transducer choice now influences the data reduction techniques and analysis. In addition, we see duplication in transduction techniques where the higher performance of the electronic transducer has not eliminated the visual systems. In fact, it is possible that the electronic system may not have totally eliminated the electro-mechanical system.

Finally, we have the system shown in Figure 5.

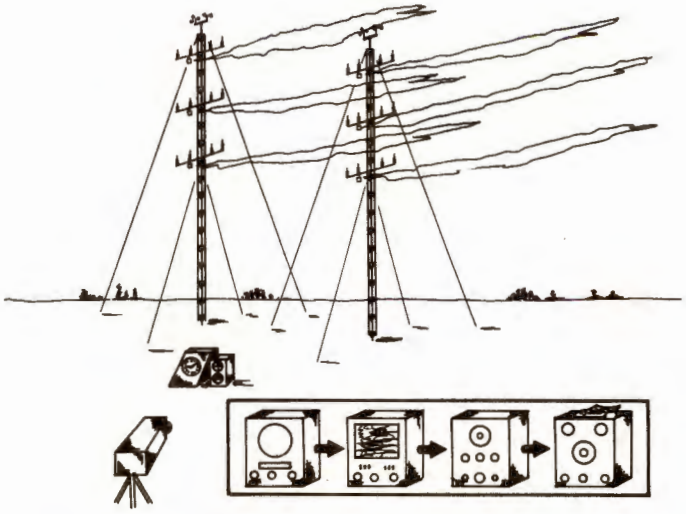

In this case, the choice of sensor has dictated all the follow-on portions of the scientific measurement system. Due to the increased capability of the overall system, the transducer now can also influence the objectives of the initial experiment.

Which of the above is the proper choice?

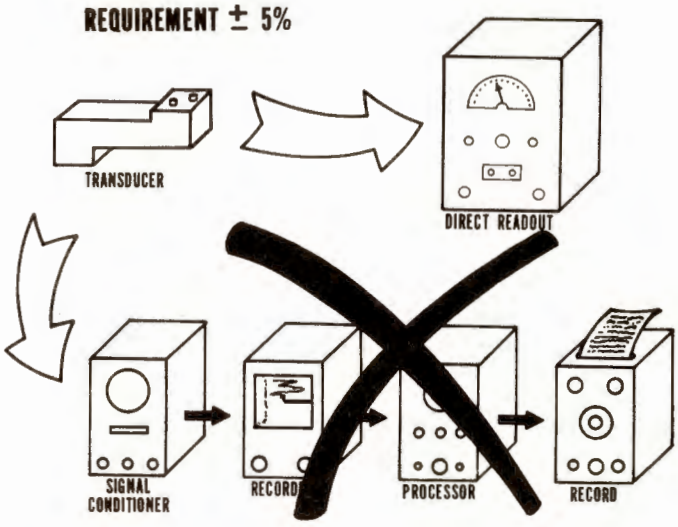

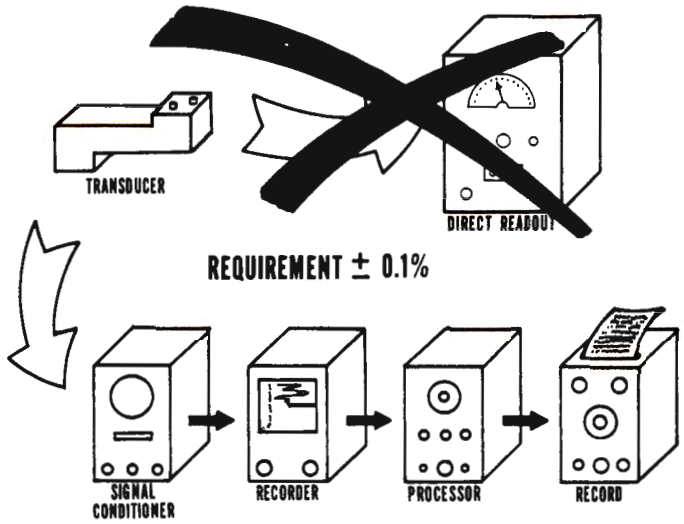

IT DEPENDS UPON THE INITIAL EXPERIMENTAL REQUIREMENT. If one is evaluating the fine structure of the dynamic air mass, that shown in Figure 5 may, in part, be the best since the other system may not meet the experimental requirements. Equally, if one wished to know the general outline of the vortex with respect to time, Figure 1 could be the proper choice.

The Answer

In choosing the sensors, the experimentalist must:

1. Determine the parameters which must be measured to probably satisfy the experiment.

2. Determine through an error analysis, the accuracy requirements of the several parameters.

3. Determine through appropriate statistical techniques, the size of the experimental program.

4. Establish the most practicable means of reducing and analyzing the acquired data.

5. Determine the transducer performance requirements which are compatible with your experimental needs as they have now been defined.

6. Review existing stock of sensors for compliance with the requirements determined in "5" above.

7. If procurement is indicated, consult a good transducer reference, such as ISA's Transducer Compendium and identify those which meet your requirements.

8. Procure that transducer which comes the closest to measuring the actual physical quantity to be evaluated.

By carefully and systematically doing our pretesting homework, we can conduct research which is both experimental-benefit and cost-benefit conscious.

NASA - Langley

INSTRUMENTATION SYSTEMS FOR LANGLEY RESEARCH CENTER'S ROCKET TEST FACILITY

By Garland N. Rollins

SUMMARY

This paper describes the instrumentation systems for testing rocket motors and pyrotechnic devices at the Langley Research Center 3 bay test cell. These systems were designed for optimum flexibility to accommodate the transducer applications associated with "one of a kind" type testing. Each cell has a total of 134 data channels which readily accept sensors including strain gage type, solid state, piezoelectric, piezoresistive, thermocouples, thermistors, magnetic pickups, variable reluctance, potentiometers, turbine flowmeters, and variable transformers. A control room patch board (4896 hubs), provides selectable routings for the cell inputs, signal conditioner inputs and outputs, local data recording and monitoring equipment, and the remote data center. This patching system permits connecting any transducer channel through any channel of signal conditioning, with or without amplification, into any oscillograph channel (108 channels), F.M. analog tape (14 channels), or digital recording system (45 channels). In all combinations of patching the electrostatic shields can be carried uninterrupted to the desired point for grounding. This practically eliminates temporary wiring since even complex changes can be put into effect at the patch points. Additional instrumentation features include: (1) a ground grid network throughout the area consisting of a copper bus connected to 18 foot ground rods every 20 feet to insure a unipotential ground, (2) control room operated calibration standards for permitting one operator to conveniently calibrate pressure transducers from 0-5 psia to 0-10,000 psi and load cells from 0-50 pounds to 0-100,000 pounds, (3) a patchable 46 channel plug board with 100 stackable plugs for series or shunt installation in each channel to enable the test operator to insert damping or sensitivity resistors, voltage dividers, and/or dummy loads on the input and output of any control room or test cell component with no plug removal or alteration in permanent wiring, (4) a channel selector network to permit the input and output voltages of each strain gage channel to be simultaneously monitored, a channel selector network to monitor amplifier inputs and outputs as well as a patchable channel selector for any other signals, and (5) 72 channels of patchable slip rings to accommodate "spin testing." Normal operations in this facility have presented a wide range of test requirements. The instrument systems' flexibility has proven very useful in transducer applications to cover these tests.

INTRODUCTION

The rocket motor and related test programs of tomorrow are often unpredictable and are usually one of a kind. This forms a basis of design for test facilities wherein flexibility is an essential criterion. The discussion in this paper relates directly to the versatile and unique approaches of the instrumentation systems to accommodate these requirements at the Langley Research Center's chemical magazine and test area. A brief description of the physical layout is offered for clarification.

DESCRIPTION AND DISCUSSION

1. Physical Outlay

Two buildings comprise this test facility and include: (1) a control building that houses instrumentation and test controls, support shop, and office space, and (2) a remotely located 3 bay test cell, (figs. 1 and 2).

Fig. 1 - Control Bldg.

Fig. 2 - 3 Bay Test Cell

2. General Instrumentation Systems

The block diagram shown in fig. 3 outlines the instrumentation systems for tests conducted in either of the 3 test bays.

On site controls provide automatic or manual operations to satisfy time correlated event functions prior to, during, and after firing. These controls form an integral part of the safety interlock system. Control lines from the digital system provide automatic start for the on site control programmer and/or on-line computerized controls. The local and remote recording systems are usable on a record only or record/playback basis. The remote digital system has on line computer capability, 45 channels, and a data rate of 20,000 samples per second. This is a central data acquisition system for several facilities.

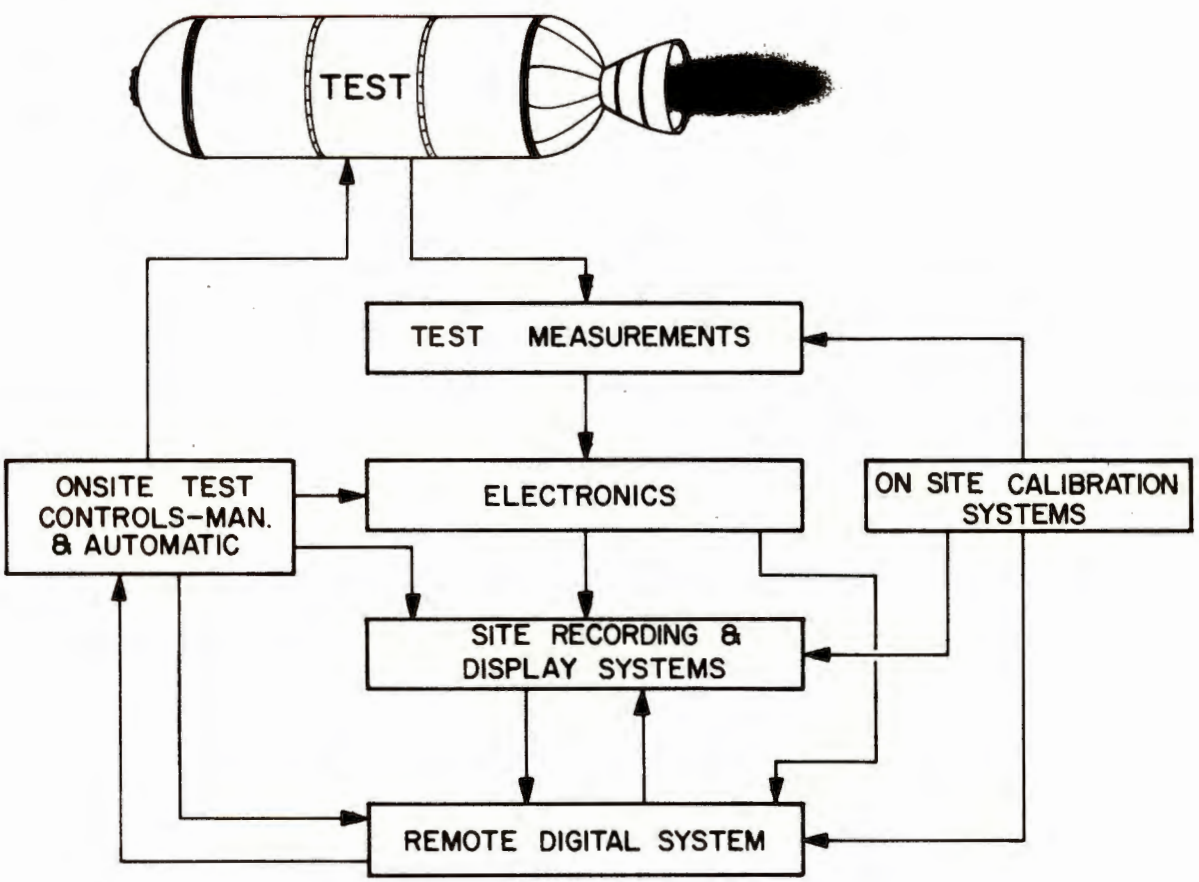

Fig. 3 - Instrumentation Systems Outline

The test measurements input junction in each cell can accept sensors of strain gage type, solid state, piezoelectric, thermocouples, thermistors, magnetic pickups, variable reluctance, potentiometers, turbine flowmeters, and variable transformers. Wiring types available for these sensors include: (1) two conductor shielded; (2) low noise coaxial; and (3) six wire double 100 percent shielded. Noteworthy uses of the cables include the typical thermocouple and strain channels. Thermocouples are usually connected directly to the two wire channels with ambient temperature measured for reference. Reference junctions can be installed between the thermocouple leads and the two wire input terminals. Strain gage channels use the six wire system with two wires for input, two wires for output, and two wires for voltage sensing. The output leads are 100 percent shielded from the voltage leads and in turn all six wires are 100 percent shielded from adjacent cables. This wiring connects to the individual channel signal conditioning with an isolated power supply for each channel.

3. Test Bays Instrumentation

Instrumentation hardware, terminations, and design features include: (1) push/latch type binding post thermocouple connectors to permit direct installation of any thermocouples with no soldering or complicated mechanical connecting process, (2) all connector shells, including coaxial type are insulated from each other to prevent unwanted shielded tie points, (fig. 4), (3) the availability of every shield on a push/latch connector and adjacent push/latch connectors tied to "Mecca Ground" permits the grounding of any shield at this point when desired, and (4) dual, bottom slotted doors covering the junctions with bottom entry for lead in cables.

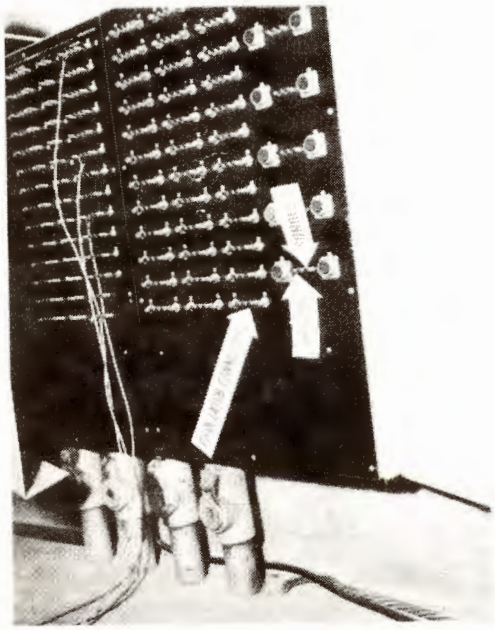

Fig. 4 - Test Bay Instrumentation Junctions

The insulated panels on which the connectors are mounted in these junction boxes have a layout to maximize the separation of certain different cable bundles. These separated bundles are then routed through individual underground steel conduits into the control room. For example, maximum separation is provided between the channels using frequency generating sensors and the thermocouple channels.

4. Control Room Patching Capability

All measurement cables form a veinal input network connected to a 4896 hub control room patchboard. This forms an effective heart to the flexibility of the measurement systems, (fig. 5).

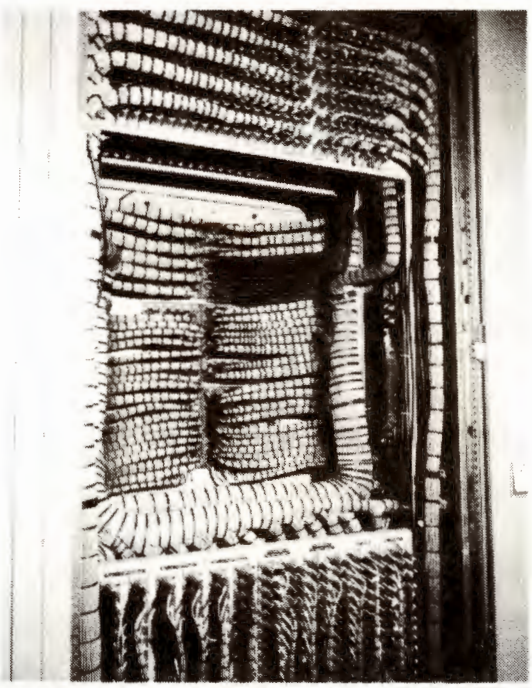

Fig. 5 - Patchboard Cable Connections

This patch system provides selectable routings for: the inputs from the cells; signal conditioner inputs and outputs; local data recording; display and monitoring equipment; and the remote digital data system. Any transducer channel is patchable through any channel of signal conditioning, with or without amplification or attenuation, to any of the recording channels, (figs. 6 and 7).

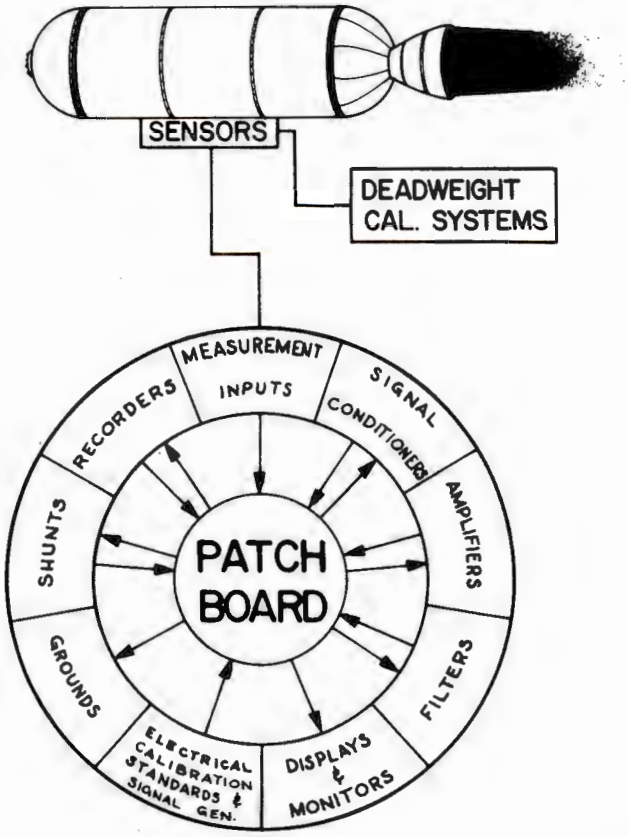

Fig. 6 - Schematic of Patching Capability

Fig. 7 - Control Room Layout

Redundancy in recording is accomplished at the patchboard. Isolation is available by patching parallel signal inputs to dc differential amplifiers and patching the amplifier outputs to recorder inputs. Patchable recorder channels include 108 oscillograph, 14 FM tape, 45 digital, 9 strip charts, and 120 spare channels for additional specific requirements.

The patching of a complete test board is usually a rapid and simple operation. When dissimilar tests are to be conducted, boards are patched to accommodate each test and the alternation from one test to another is made with a board change in a few seconds. Figure 8 shows a typical test board patched and installed.

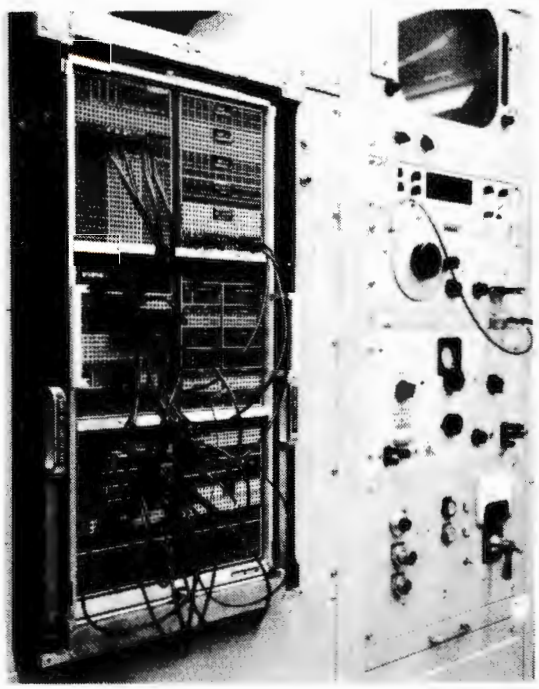

Fig. 8 - Patched Board Installed

With this system temporary wiring, adaptors, and appendages are nearly eliminated. This serves to expedite test set up time and to minimize errors.

The special features in this patch system include: (1) all electrostatic shields are carried through uninterrupted to the desired point for grounding which can be at the transducer, cell junction, patchboard, signal conditioner, or recorder, (2) an input/output plug board feeds all cables

to the patchboard and permits bypassing the patchboard when a patchcord cannot be tolerated, such as, when uninterrupted coaxial cable must be used, (fig. 9), (3) an interlocking circuit on the patchboard engage/disengage mechanism for preventing signal spikes from the downstream components such as galvanometers, also applies a short circuit to the input of the amplifiers.

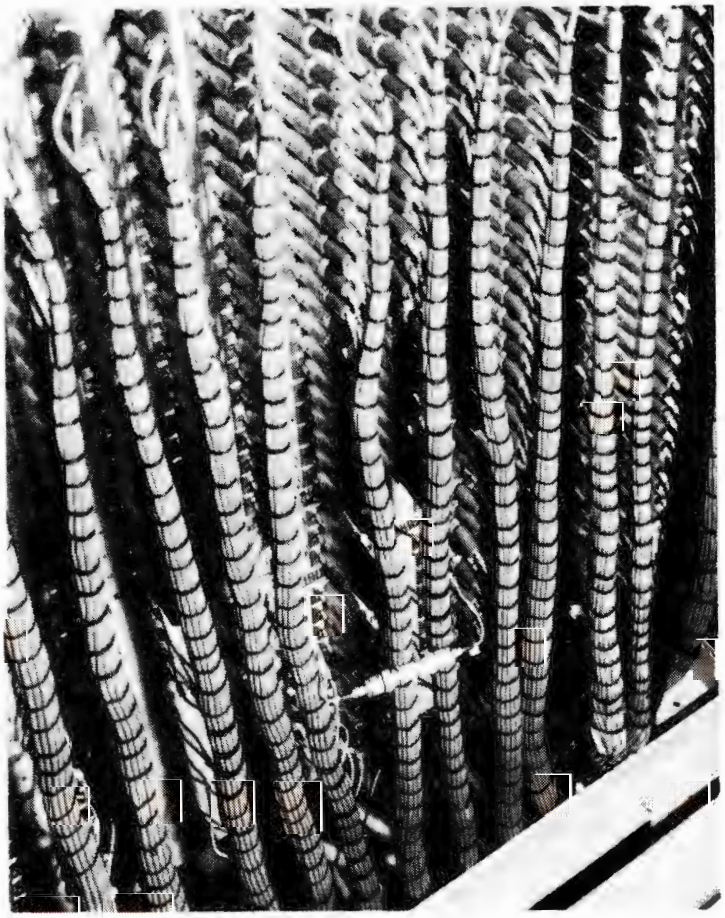

Fig. 9 - Typical Patchboard Bypass

5. Ground Network

In a facility of this type where the tests are often one of a kind, a variety of changes is dictated. One of the most common problems in such setups is improper shielding and grounding. For example, a given test may include thermocouples which are attached to a grounded motor case. The next test may be a motor case of an insulating material which cannot be grounded at the same point. Another example is the single ended vs. floating recording systems. Since the same transducer channels must be used for all tests, a reliable and very flexible grounding and shielding system is of the essence. To obtain a reliable unipotential ground there is a ground grid network consisting of a copper bus connected to 18 foot ground rods every 20 feet. This network is uninterrupted in and between the two buildings.

The ground network bus appears in the test bays as a 1/4 inch x 1-1/2 inch copper bar distributed for convenient attachment. This bus also runs inside the junction boxes where the back side of the grounded push/latch binding posts described earlier are connected. In the control room the bus runs under the raised floor in a pattern adjacent to the instrument racks. An extension of this bus is distributed to appropriate patchboard hubs, (fig. 10). Two parallel lines of #6 welding cable connect the remote digital data system to the ground bus. This network provides convenient tie points throughout the area with less than 0.001 ohm maximum variance in resistance. All grounds including power 3rd wire and chassis of instruments with chassis grounds are connected directly to the network to eliminate unreliable connections frequently made between racks and chassis with mounting screws and similar hardware.

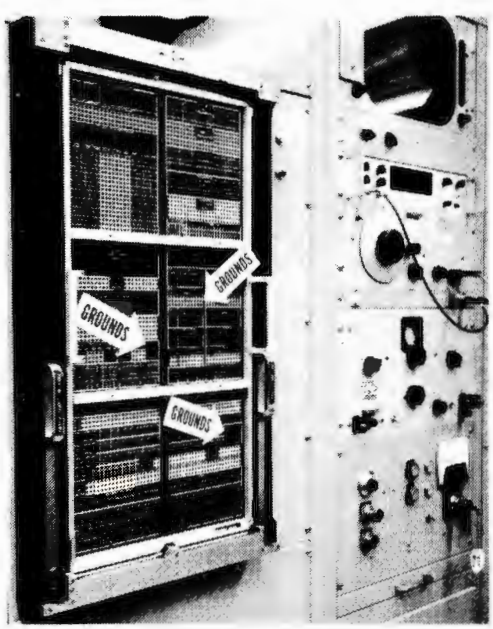

Fig. 10 - Patchboard Showing Ground Hubs

6. On Site Calibrations

Systems and techniques used for the on site calibration of pressure, thrust, temperature, and flow measurement instrumentation in this facility satisfy the following requirements:

(1) Provides a reliable calibration against a good working standard.

(2) Calibrates the measurement instrumentation as a system through all components.

(3) Calibrates individual components if required.

(4) Minimizes the manpower requirements and the errors frequently encountered when two or more persons are calibrating a system over communication lines.

These requirements have not been met in the area of vibration and shock calibration measurements. These components are laboratory calibrated.

Thermocouple channels are calibrated with the insertion of selectable levels of voltage. Convenient features of the thermocouple calibration are the ability to automatically or manually calibrate any portion of the total 42 channels, attenuate the output levels, provide polarity reversals, and test for continuity, (fig. 11).

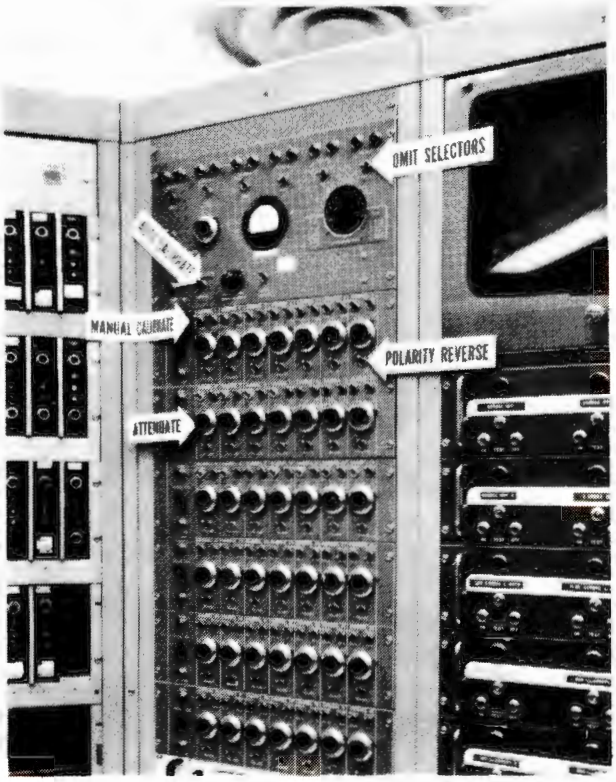

Fig. 11 - Thermocouple Calibrator

The nature of tests conducted in rocket test facilities dictates that in-situ recalibration of pressure transducers be made after each series of tests and that load cells be deadweight recalibrated on a frequent basis. A unique system for calibrating these transducers is employed wherein pressure and force sensors are calibrated in the control room using an oil deadweight pressure tester and a Morehouse load machine.

The Morehouse Load Machine is complimented with a three load cell calibration system with local and remote digital readout.

There is a strain gage channel from each of the deadweight calibration standards to the patchboard that duplicates the strain gage channels from each test bay. The physical layout permitted all cables from the test bays to be cut to duplicate lengths. Control room strain gage calibration channels duplicate the test channels in length, electrical connections and environment. When the transducer to be calibrated is attached to the deadweight standard and connected through the patchboard, it is a one-man operation to route the transducer output into any desired readout, make adjustments, apply deadweight stimulus, and operate the recording system. Open circuit transducer calibrations and complete systems calibrations are made in this manner, (figs. 12 and 13).

Fig. 12 - Pressure Calibration

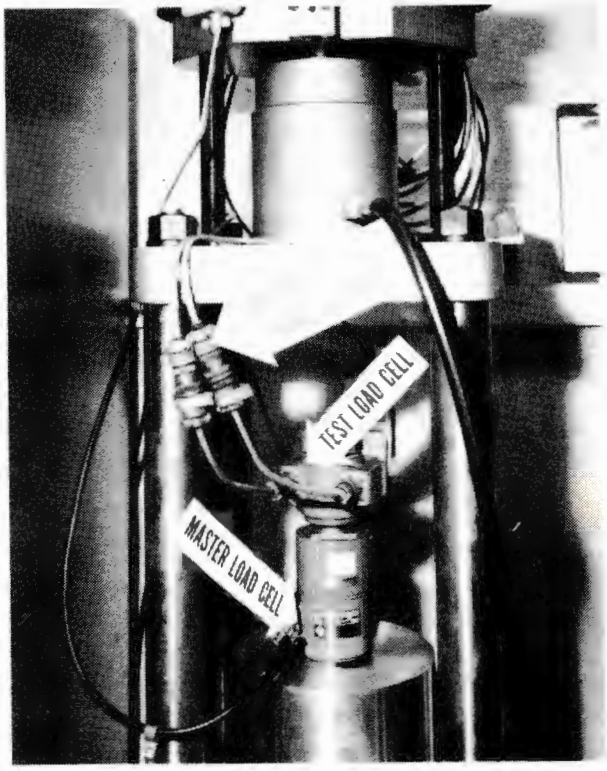

Fig. 13 - Load Cell Calibration

Matched, single shunt, bipolar resistance cards are installed in each signal conditioner channel providing five levels of electrical calibration. Transfer of the transducer to the test installation and reactuation of the resistance-cal circuits constitutes electrical recalibration of the system. The five levels of resistance-cal provide approximately 0, 30, 60, 100, and 150 percent of full scale output for 350 ohm, 2 mV/V transducers. The sensitivity of the system and the nonlinearity of all combined components are determined with the exception of the transducer response to physical stimulus.

To complete the calibration of the measurement systems the electronic components are calibrated in-situ by inserting patchboard connected voltage, current, frequency, or resistance standards to the desired components inputs.

7. Data Acquisition

Oscillograph data forms a large portion of the recording media at this facility. There are 108 total channels comprised of two each 36-channel graphs and two each 18-channel graphs, (fig. 14).

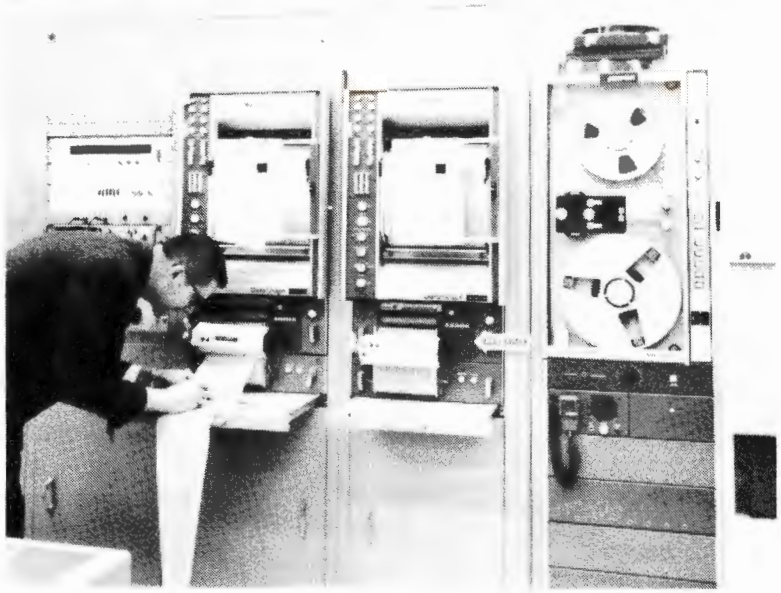

Fig. 14 - Control Room Showing Oscillograph Recorders

As tests change, the signal sources, levels, and frequencies change and it becomes necessary to change the shunt, series, and source loading resistors. Usually this involves insertion of adapter plugs, with internal resistor networks at the recorder. At best this is inconvenient. It often

disturbs the permanent cable trees to a point of fatigue damage. This facility uses a patchable resistance network which eliminates alterations and adjustments to the permanent wiring. Conventionally these are labeled "shunt" channels. Each shunt channel has chassis mounted input and output receptacles spaced to accommodate insertion of resistor modules. The spacing of the receptacles permits module stacking in two planes. This enables the user to assemble an equivalent resistance of the desired value. Quick determination of the resistance value is made with decade boxes mounted with the receptacle chassis, (fig. 15).

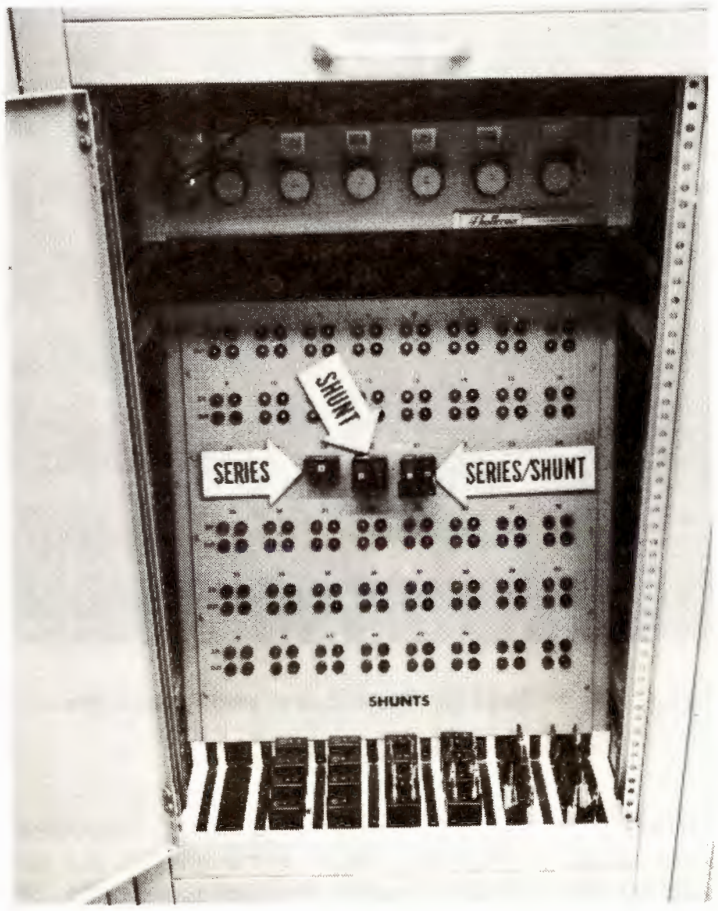

Fig. 15 - Patchable Shunt Board

8. Monitoring Capabilities

Setting up and trouble shooting the instrumentation systems is facilitated by having all monitors patchboard connected. These monitors include digital voltmeters, multimeters, counters and oscilloscopes which can be patched into the system at any desired point.

There is a switch selectable input to the patchable monitors for all strain gage channels to provide simultaneous readout of transducer excitation and output voltages, (fig. 16).

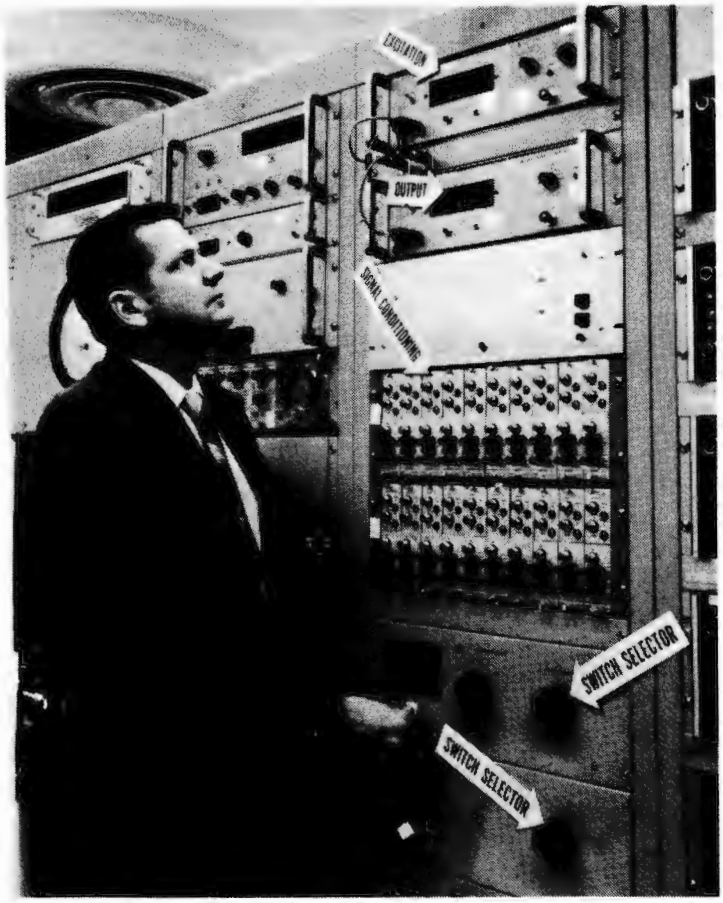

Fig. 16 - Switch Selectors and Monitors

This switch selector is interlocked to prevent undesirable parallel connections on strain gage channels. This arrangement is used to set up, calibrate, and trouble shoot strain gage channels. It is of outstanding value for the operator to dial the selector switch through as many as 40 strain gage channels to quickly verify desired pretest conditions.

There are similar switch selectors for setting up and calibrating the 40 amplifiers and a separate switch selector that has patchable inputs and outputs to monitor any miscellaneous channels. The strain gage and amplifier switch selectors having a high use rate were wired directly and not patchboard connected. The patchable miscellaneous channel

selector provides convenient switch selectable monitoring of any channel. All signal generators used to simulate test signals are patchable. These generators can be patched out to the test bay on unused channels, jumpered in the bay and brought back on the channel being tested. This technique is used to dynamically test measurement channels. Used in conjunction with the channel selectors, a system for dynamically calibrating the entire facilities permanently installed measurement channels is easily set up and used.

9. Concluding Remarks

The instrumentation for this facility was designed for one of a kind type set ups. As a result the design of the grounding, shielding, calibration, patching, monitoring and shunting methods provide a high degree of versatility. Manpower efforts have been reduced for calibration of sensors and for the operation of the instrument systems. Human errors were thereby reduced.

The diversity of tests conducted here with a wide variety of measurement types and numbers are accommodated with a minimum of set up problems.

The operation of this facility has proven its merits to the extent that several subsequent Langley Research Center facilities have incorporated these design features. Some of these facilities accommodate continuous or long range and repetitive type testing.

The facility described in this paper has been in operation since 1969 conducting tests with a diversity of requirements. These tests included simple motors using minimum instrumentation, assortment of liquid and solid fuel tests with customized measurement requirements, and crash programs such as the Apollo 13 anomaly review requiring extensive measurements on several tests with a minimum changeover time between tests.

A MEASUREMENT SYSTEM FOR AIDING COMPRESSOR DESIGN

By

John T. Carroll
Assistant Project Engineer
Pratt & Whitney Aircraft
East Hartford, Connecticut 06108

Abstract

To examine the influence of support struts and pylons in the gas path of an axial flow compressor, miniature pressure transducers were attached to the fan blades. A method of mounting the transducers was developed which reduced strain induced signals to acceptable levels. During the testing of a 52 inch diameter fan, the transducers were subjected to 33,000 g's of loading without failure. A ring of potted electronics was mounted on the hub of the fan to power the transducers and to condition the output signals which were then led out through slip rings. An analysis of the data clearly shows the influence on the fan of upstream and downstream obstructions such as stators, rods, struts, and pylons. The effect of g-loading on transducer response is discussed.

I. Background

In the testing of any new compressor design there are various measurements made to evaluate the compressor's reaction to varying levels of turbulence and flow distortion in the inlet. Answers to questions concerning rotating stall, surge margin, and the generation of noise - both broadband and discrete - are always of prime importance. The most widely used method of measuring these turbulence levels and distorted flow conditions is to place pressure probes or rakes of pressure probes in the inlet. Unfortunately, these probes and rakes have several drawbacks. They tend to generate turbulence themselves and can often invalidate a measurement. For example, in a measurement of the turbulence level necessary to induce a rotating stall, they can generate enough turbulence to mask the true level of turbulence needed. Another example might be an attempt at a real time correlation of inlet turbulence and flow distortion with far field noise. The wakes of the probes and rakes themselves can produce enough noise to hide the changes one is looking for. It is usually not very practical to run two separate tests - one with probes and one without probes - as it is often difficult to match exactly the engine and atmospheric conditions. This is especially true on outdoor engine test stands where wind conditions can change in the time it takes to shut down an engine and remove the instrumentation rakes.

There is the additional problem of determining how objects downstream of a compressor rotor affect the pressure field at the rotor itself. Stators, pylons, support struts, instrumentation probes and the like which are located downstream of a rotor can all affect the pressure distribution and velocity field as it exists at the surface of the rotor. The basic problem to which this measurement system is directed then is twofold; first, how can one make dynamic pressure measurements in

an engine inlet (at the face of a compressor) without appreciably disturbing the flow; secondly, how can one make measurements of the variation in the pressure field at a rotor caused by obstructions in the flow downstream of the rotor.

II. Rotating Transducers

One solution to these problems is to make these measurements on the surface of the rotor itself. Rotating measurements using strain gages and thermocouples as the transducers have been made this way for many years and are well documented. However, making measurements of rapidly fluctuating pressures using rotating transducers is a relatively new technique. Placing a transducer on the surface of a rotor has many advantages. In addition to avoiding the drawbacks listed in Section I, it has the additional advantage that a small number of transducers on one blade can give complete circumferential coverage at several radial positions. Increasing the number of similarly instrumented blades increases the ability to correlate the flow fluctuations across the compressor face. The pressure sensitive portion of the transducer must also be at the point of measurement if the difficulties associated with remote mounting are to be avoided. Problems of frequency response limitation, waveform distortion, and phase shifting are inherent in any system using tubing between the point of measurement and the face of the transducer. The three principal (and rather obvious) requirements of any transducer mounted on the surface of a rotor are then: A. that it be small enough so that the pressure distribution over the blade is not appreciably affected; B. that it be able to sustain the g loads it is expected to encounter; C. that its sensitivity and frequency response as a function of g loading be known.

In the early part of 1970, thirty different manufacturers of pressure trans-

ducers were contacted, and of these, four manufactured transducers that were believed suitable for preliminary testing. All four utilized some form of semiconductor strain gage device as the pressure sensitive element. A total of nine different models (20 units) were evaluated for size, weight, and general construction methods. Natural resonance frequencies and acceleration sensitivities were measured as were pressure sensitivity, input and output impedances, linearity, and hysteresis, zero output, full scale output, and repeatability. This was done for a range of pressures and temperatures. On the basis of this investigation it was found that the semiconductor strain gage transducers that were available at the time had essentially the same electrical and mechanical specifications within comparable temperature and pressure ranges, although manufacturing processes differed among companies. The Kulite pressure transducer, when modified somewhat to fit better our particular needs, was believed to have the least number of objectionable features. The modified version (Model LQS-070-25) which was used for the rotating tests is shown in Figures 1a and 1b.

III. Mounting Methods and Initial Testing

During the evaluation of the pressure transducers it was found that they were quite strain sensitive. This meant that in addition to the problem of keeping them on a rotating blade, they had to be isolated from the strain field of the blade. The first attempt at strain isolation was with a non-rotating exit guide vane in which 0.020" deep slots were machined on both the pressure and suction surfaces and a hole drilled from the slots through the end as a passage for the leadwork (Figs. 2, 3, and 4). To determine the effectiveness of each strain isolation technique tried, the ends of the vane were held rigidly on a shaker table and the transducer

output monitored while the vane was subjected to various levels of dynamic loading. After several partially effective methods were tried, a method was devised which reduced strain induced signals by two orders of magnitude over a transducer that was hard mounted to the blade. It consisted of epoxying the transducer to a 1 mil thick brass base which was then placed upon a 3 mil thick coating of silicone rubber at the bottom of the slot. The remaining open portions of the slot were then filled with silicone rubber and a very thin layer was spread across the surface of the diaphragm. The vane was successfully used in a 28" diameter compressor rig to test the feasibility of this type of installation for the verification of certain aerodynamic theory - in this instance the unsteady lift response of stator vanes.

The first large scale rotor test was on a compressor rig at an outdoor test stand that could produce just over 32,000 g's at the tips of its 52 inch diameter fan at maximum RPM (6750). The problem of mounting a pressure transducer near the tip of a rotor blade is more difficult because most blades are too thin to tolerate a 0.020 inch slot. The best method found for mounting the transducers on rotor blades is shown in Figure 5. The transducer base is epoxied to brass shim stock, one end of which is then epoxied to the rotor. The transducer is essentially cantilevered over a base of silicone rubber. This was found to produce very low levels of strain induced signal. This method of mounting, and the transducer itself, were successfully tested to 33,000 g's in a spin pit without losing the physical or electrical integrity of the transducer. Six transducers were mounted on the fan in a manner as illustrated in Figure 6. The instrumented fan itself is shown in Figure 7. Because some of the phenomena to be investigated were expected to produce pressures of only 10^{-3} to 10^{-2} psi, a rotating amplifier ring (Figure 8) was built which

contained eight channels of amplification/voltage regulation. Each channel provides a regulated input of 7.8 volts to the transducer and a 300X gain of the transducer's output. The amplifiers have a low frequency cutoff of 8 Hz and an upper frequency limit of about 25 KHz (3 dB point). A sketch of the complete system is shown in Figure 9.

Some Test Results:

Of the many interesting (and sometimes unexplainable) results obtained from this and other instrumented rotors, two examples illustrating the type of data which can be obtained are given. In the first example, the experimental rig configuration consisted of 46 rotor blades, 108 double stator vanes, and 8 large support struts equally spaced around the circumference of the fan duct as shown in Figures 10a and 10b. It is instructive to note that the distance between the trailing edge of the rotor and the leading edge of the struts was about 9.5 inches. The traces shown in Figures 11a and 11b are graphs of the pressure as a function of circumferential position as seen by a transducer mounted 1.0 inch from the tip, 0.6 inch from the leading edge, and on the suction surface of the blade. In both cases only the periodic and phase coherent portions of the transducer signal are shown. The graphs are a summation of 1024 samples keyed to a 1E signal (E being fan rotating speed in revolutions per second) using a Fabri-Tek Model 1062 as an ensemble averager. The axial Mach number during this time was approximately 0.3 at the leading edge of the fan. In Figure 11a the averaging process was performed over a time period that corresponded to a blade rotation of just over 360 degrees. The potential fields of the struts are quite evident. Figure 11b corresponds to a shorter time period (with an attendant increase in resolution) during which the transducer has moved through 45 degrees thus passing through the potential field of two struts and thirteen vanes. The unexpected fact is that objects in the flow

path 9.5 inches downstream can be sensed by these transducers.

In the second example, which had a somewhat different strut configuration, the effects of three 1/4 inch rods projecting 8 inches into the inlet and located 4 inches upstream of the fan blades are examined. A schematic of the position of the retractable rod in relation to the rotor is given in Figure 12. A plot of amplitude vs. frequency for an unobstructed inlet configuration (rods retracted) is shown in Figure 12a. In Figure 12b, inserting the three rods at the 0, 90, and 180 degree positions is seen to produce a strong 4E signal and associated harmonics. Figure 13 shows a 10 KHz analysis of pressure levels vs. frequency utilizing a 50 Hz filter bandwidth. This analysis is for the unobstructed inlet configuration. The 108E spike caused by the 108 stators can be clearly seen.

Problem Areas:

The reason that there are no absolute pressure levels on the ordinates of graphs 11a, 11b, 12b, 12c, and 13 is because the transducers have not as yet been calibrated with any high degree of certainty at these g loadings. Since the amplifiers used for nearly all the rotating tests to date have not been D.C. amplifiers, not much information has been gathered on the effects of g loadings on E_{Po} - the voltage output of the transducer at rest and without any differential pressure across the diaphragm. The results of a test that was run on a smaller rig, where E_{Po} could be measured is shown in Tables I and II. It appears from the data that the bonding material gives a little each time the diaphragm is centrifugally loaded in a direction parallel to the plane of the diaphragm. For the first few cycles of any load cycle series the diaphragm does not quite return to its rest position. After eight or nine cycles,

however, the diaphragm appears to reach the limit of its "give" and the initial and final stress conditions are about equal. This would seem to indicate that when making absolute pressure measurements at various rotor RPM it is necessary to first g load cycle the transducer until the diaphragms are in their "set" position. Since Table I represents the first g-load cycle on each of three days, it can be seen that the random day to day variation in E_{Po} can be as great as any g load hysteresis effect. The data from Table I are graphed in Figure 14.

At the moment there are several different approaches being taken to evaluate the frequency response and sensitivity of these transducers as a function of g loading. Rotating transducers either within shock tubes or in the presence of strong acoustic fields are two of the methods presently under investigation.

From what was learned on the first series of tests, a transducer was designed at P&WA which will incorporate a silicon base rather than the Invar in the present model, be 6 mils thick instead of the present 12, and have certain other minor changes in wiring. The base will be bonded directly to a 1 inch by 1 inch brass plate - eliminating the original 3 mil fiberglass base. A sketch of the design is shown in Figure 15.

Conclusions:

It can be safely said that the feasibility of making measurements of the rapidly fluctuating pressure field on the surface of a rotor has been demonstrated. However, the character of the information being received from these transducers can be understood at present in qualitative terms only. Additional work is needed before a quantitative understanding of the data is complete.

Acknowledgements:

The author wishes to acknowledge the invaluable assistance of Mr. Robert Niedbala and Mr. Ralph Rinaldi in the acquisition and compilation of the data in this report.

A portion of this work was conducted under FAA Contract No. DOT-FA69WA-2045.

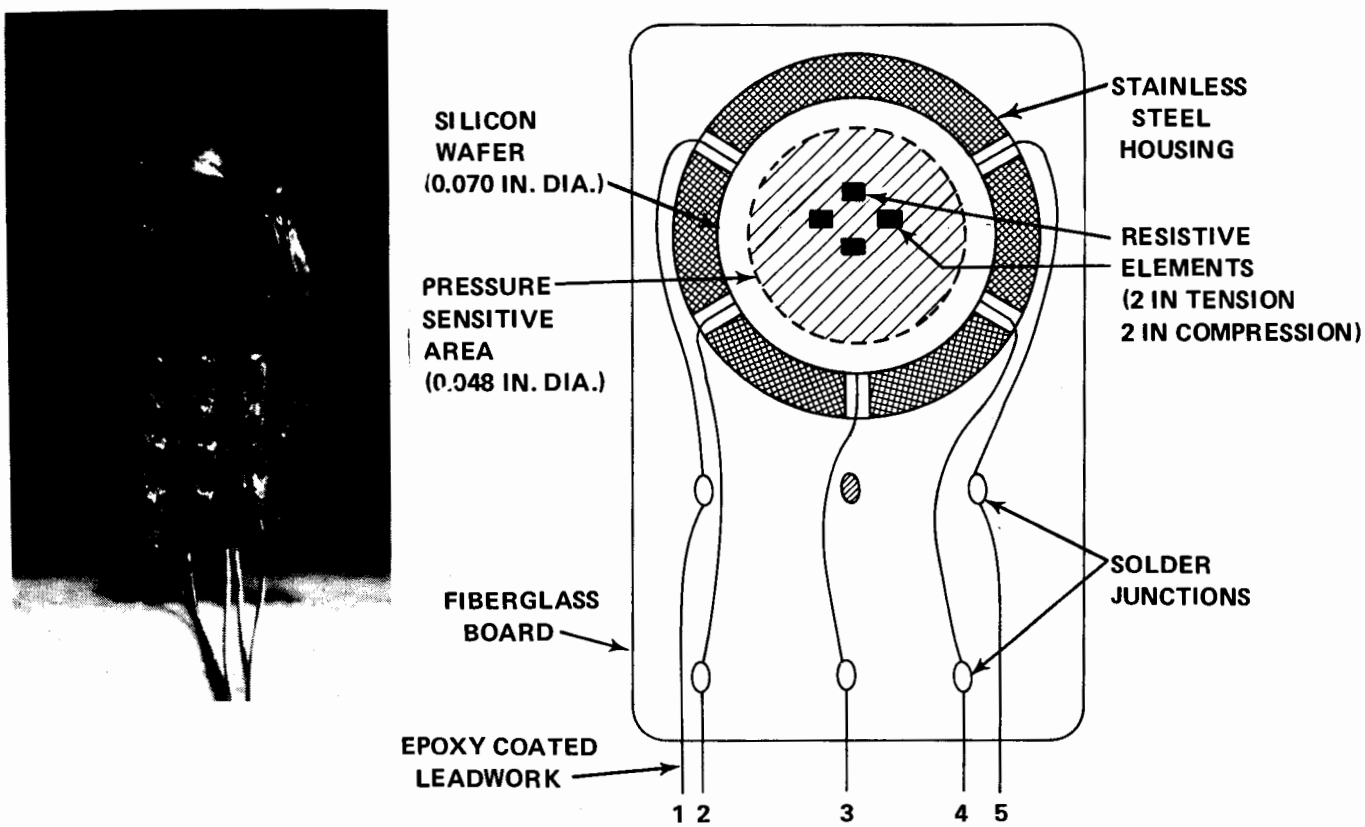

Fig. 1a Closeup and Schematic of Transducer

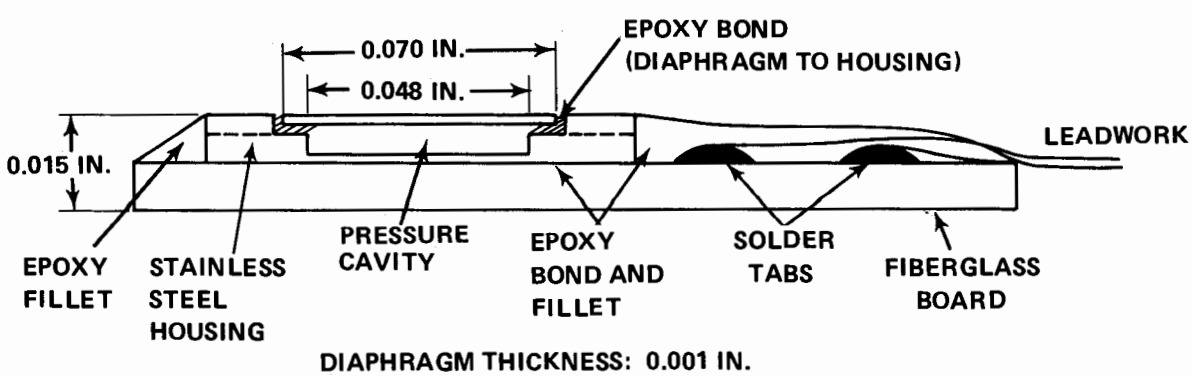

Fig. 1b Side View Schematic of Transducer

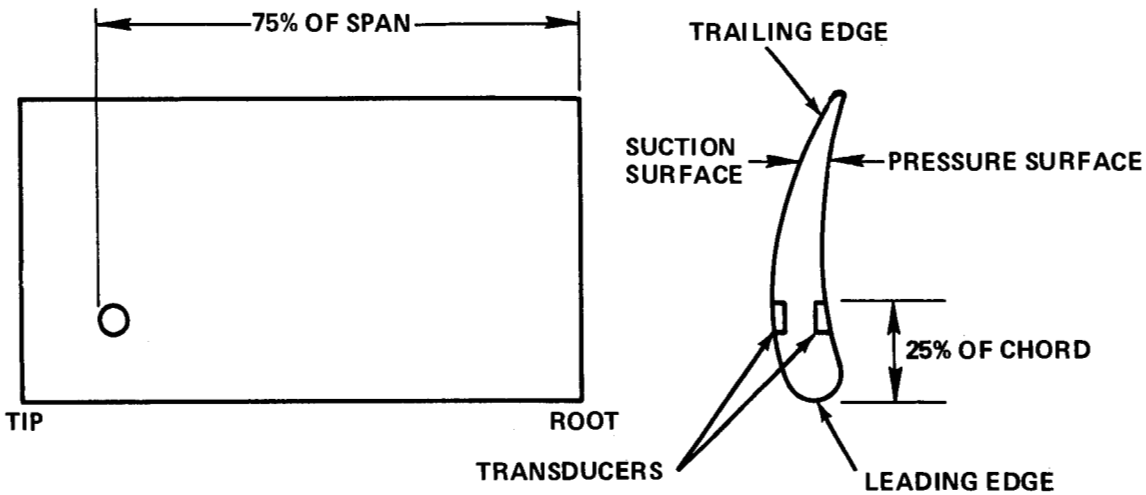

Fig. 2 Placement of Transducers on Exit Guide Vane

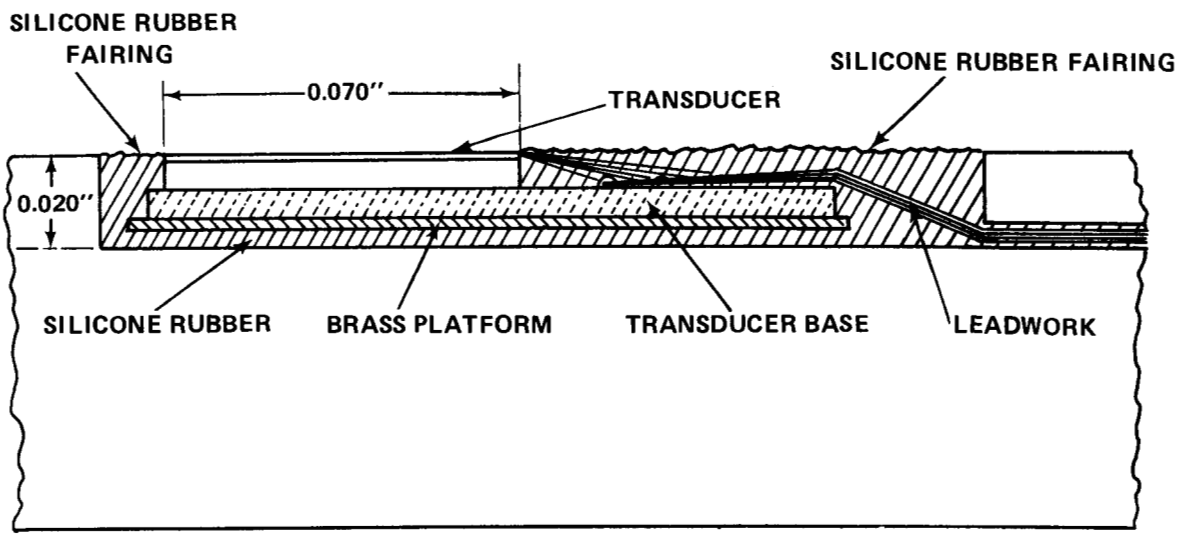

Fig. 3 Cross Sectional Schematic of Transducer Installation

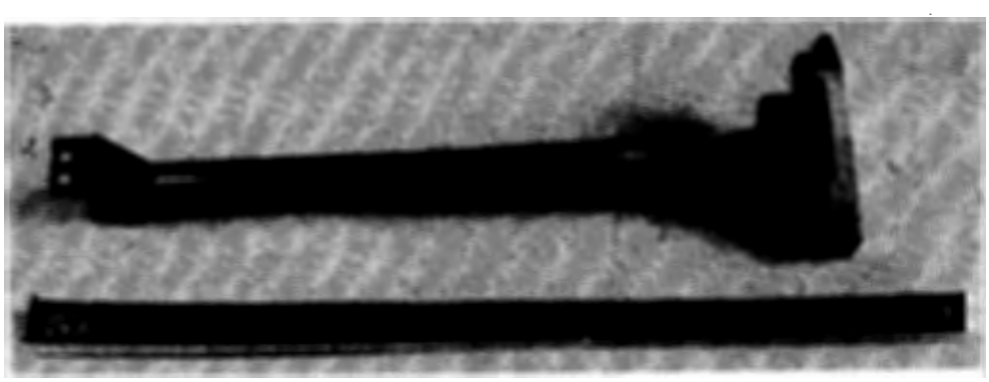

Fig. 4 Exit Guide Vane with Transducer Installed

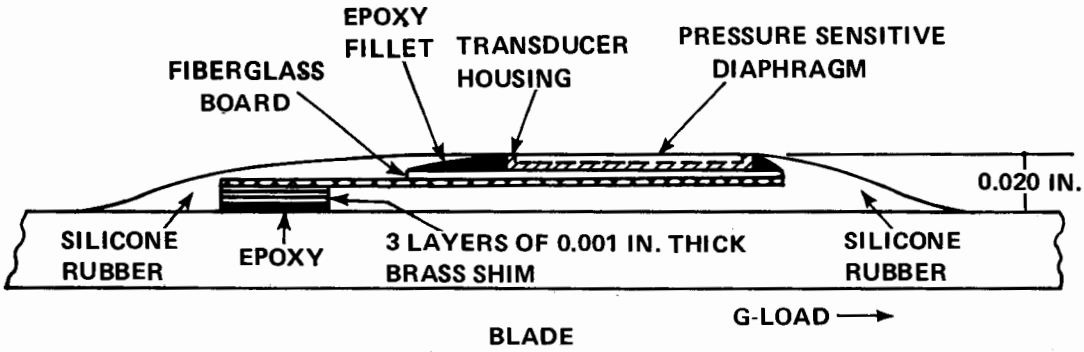

Fig. 5 Schematic of Mounting Procedure

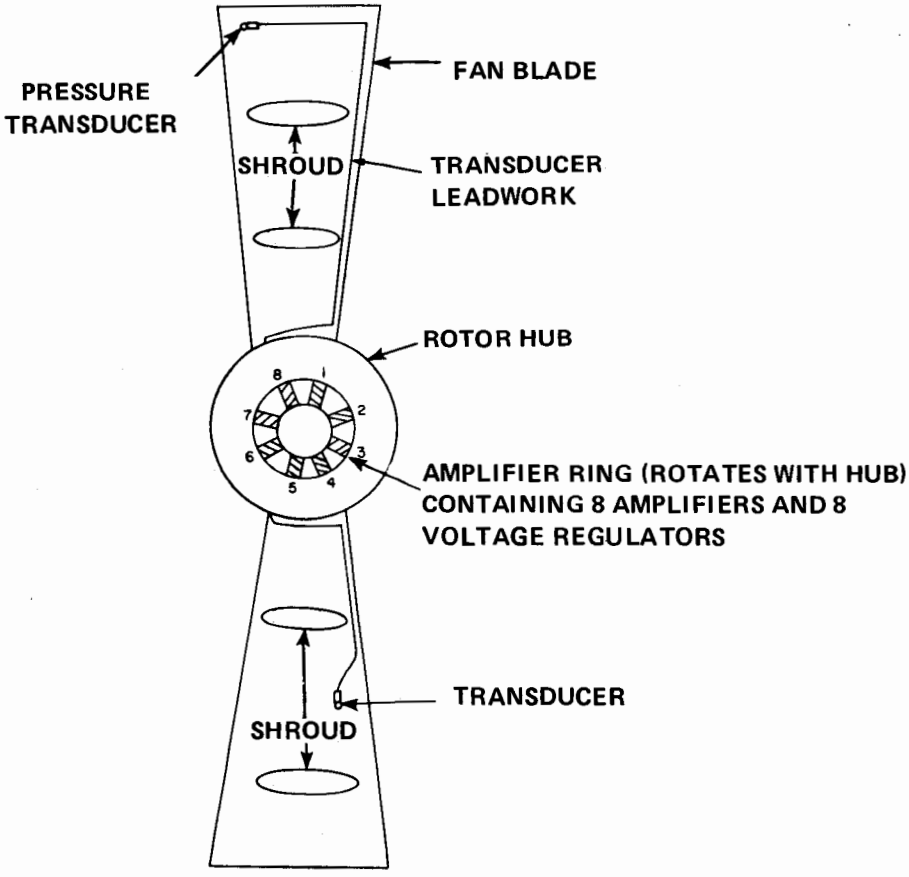

Fig. 6 Typical Transducer Locations on Rotor

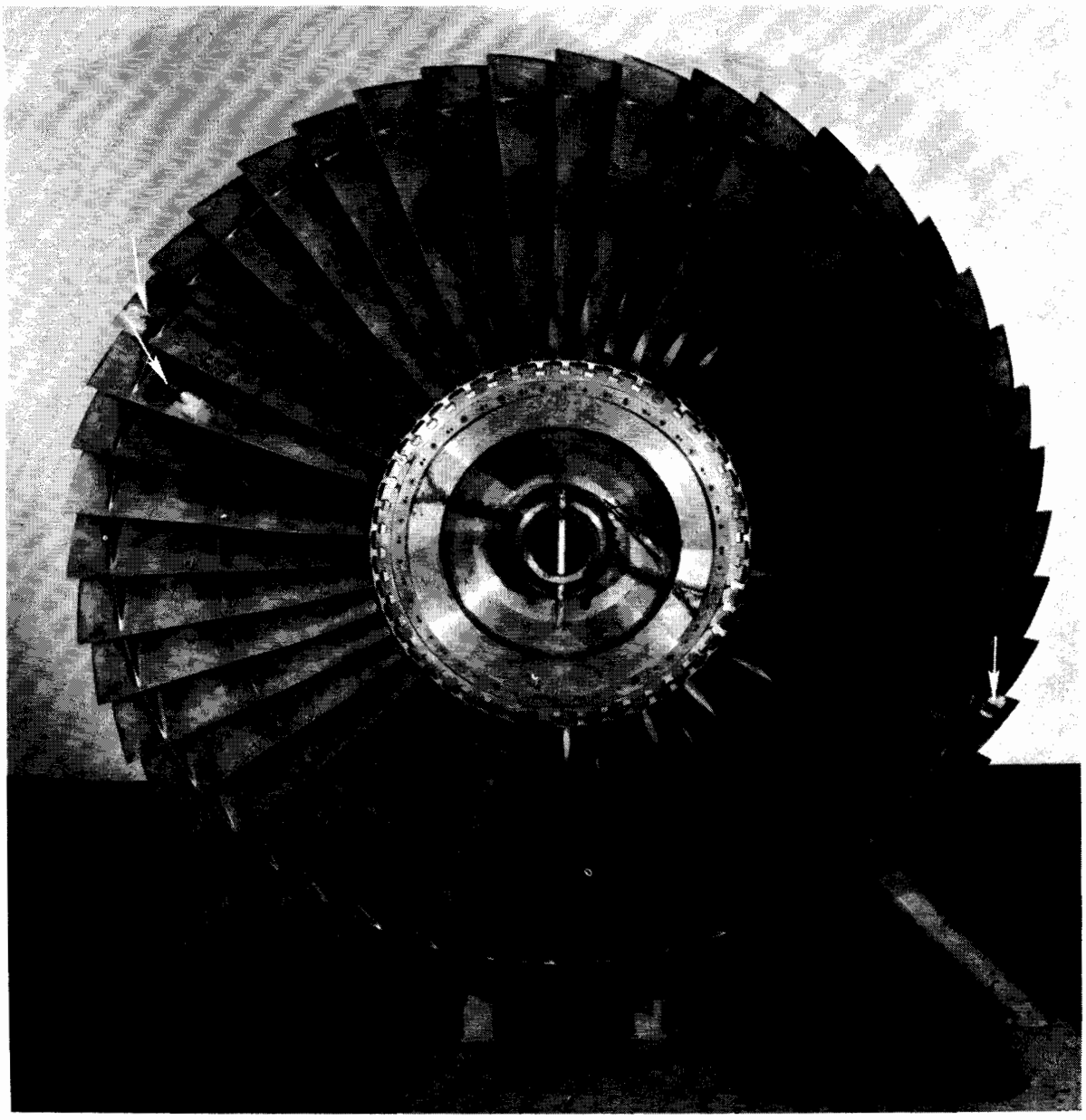

Fig. 7 Instrumented Fan. Arrows Indicate Transducers

Fig. 8 Ring Containing 8 Channels of Amplification/Voltage Regulation

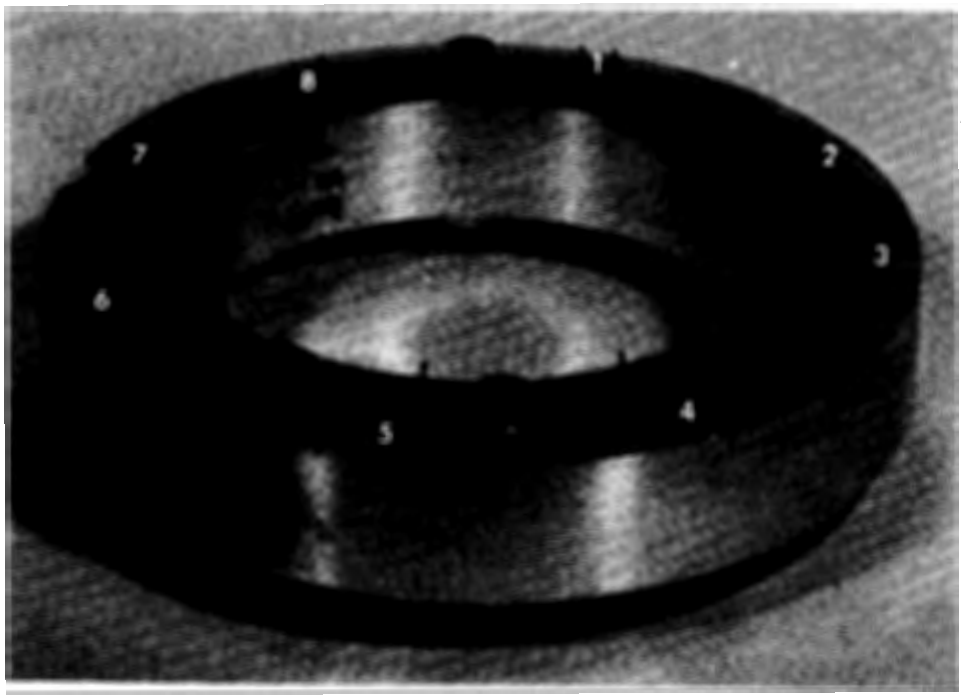

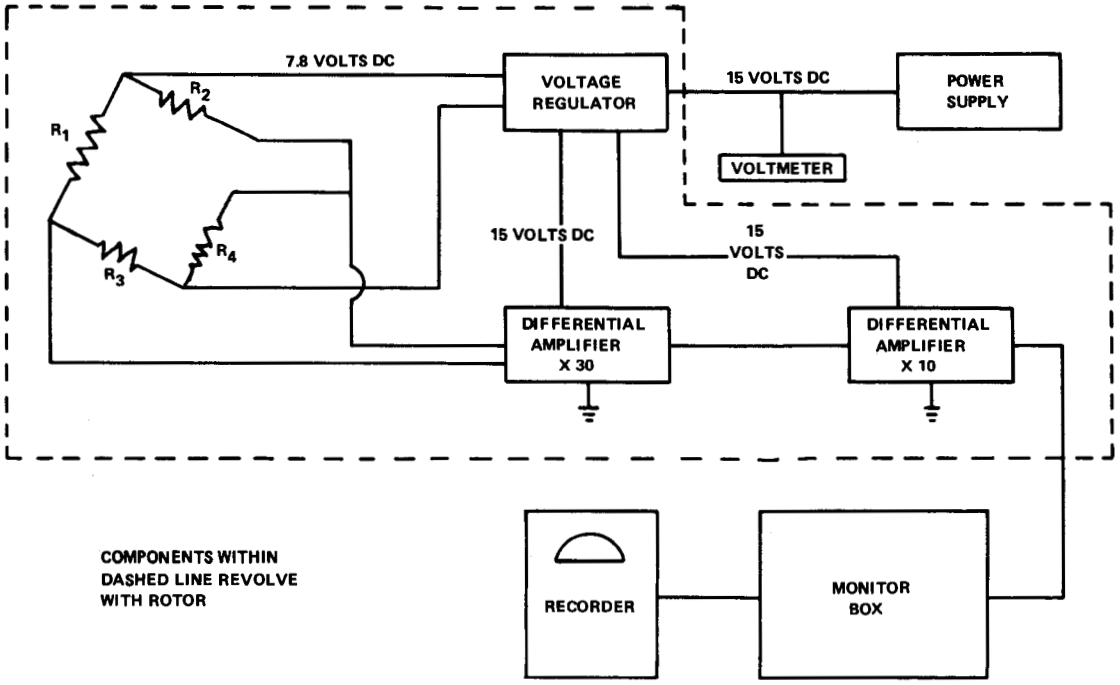

Fig. 9 Block Diagram of Complete System

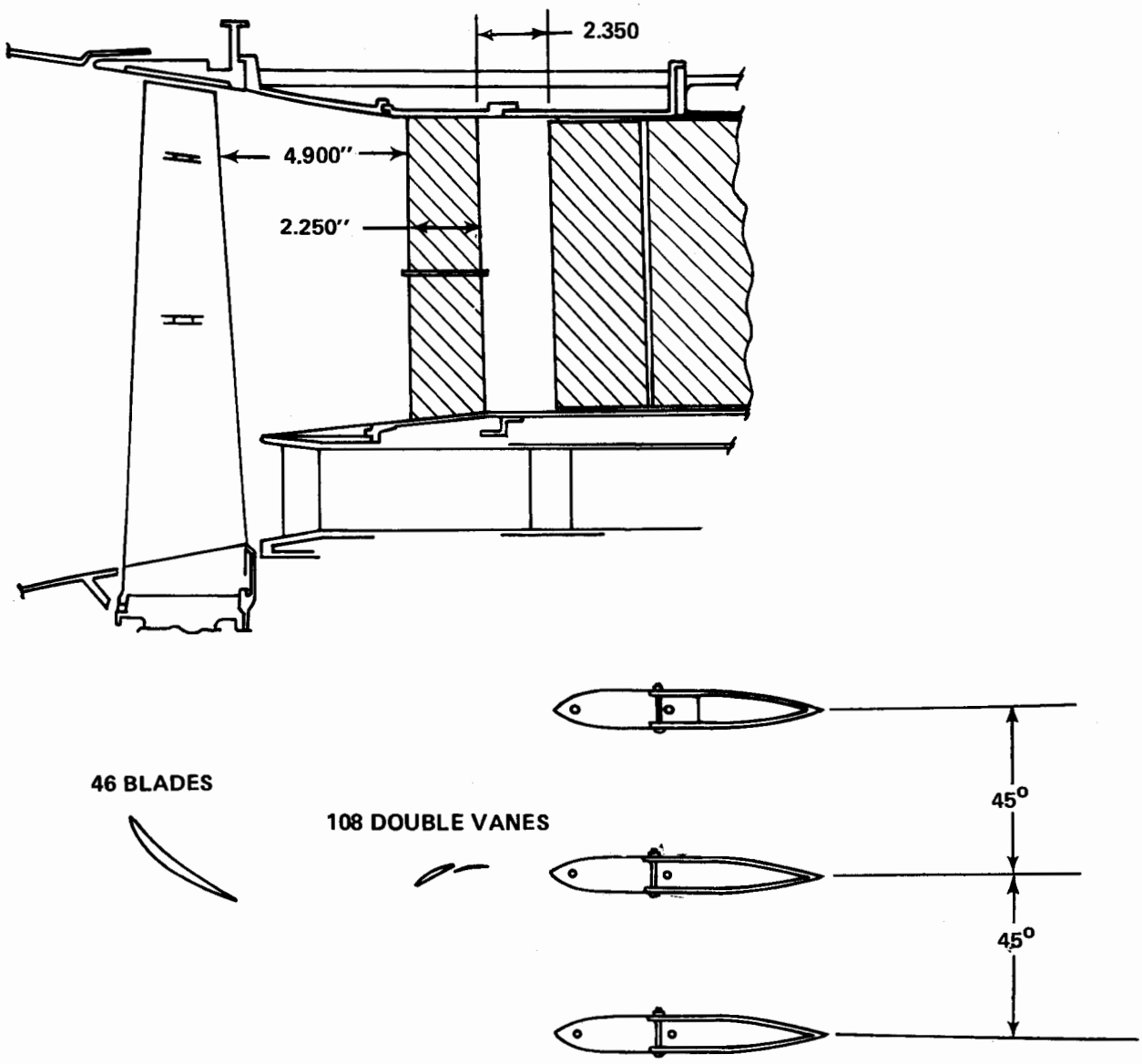

Fig. 10a Test Rig Geometry

Fig. 10b Strut Geometry for Figs. 11a and 11b

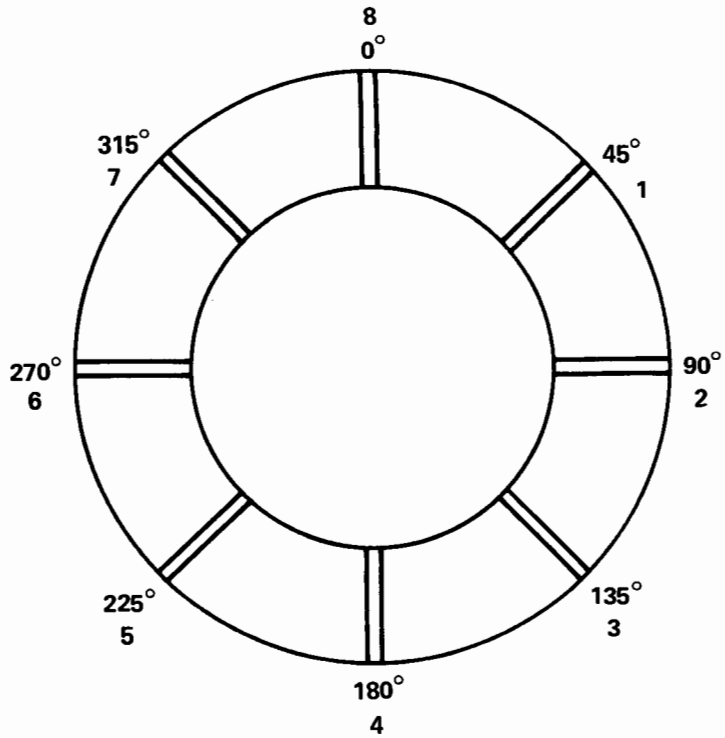

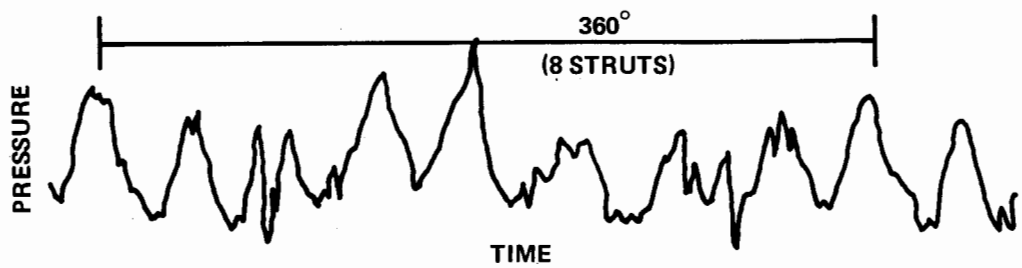

Fig. 11a Data Analyzed to Show Potential Field of Struts

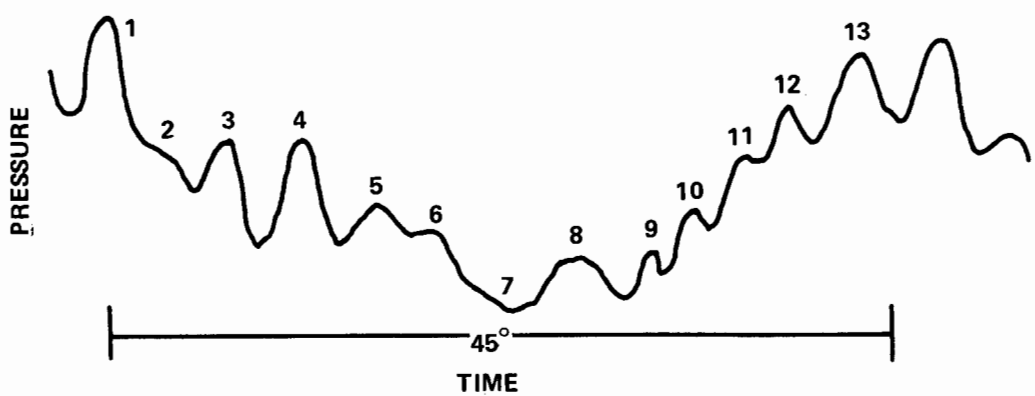

Fig. 11b Data Analyzed to Show Potential Field of Vanes

Fig. 12 a) Rig Geometry Showing Retractable Rod. b) 2 KHz Analysis With Rods Retracted. c) 2 KHz Analysis With Rods in Place.

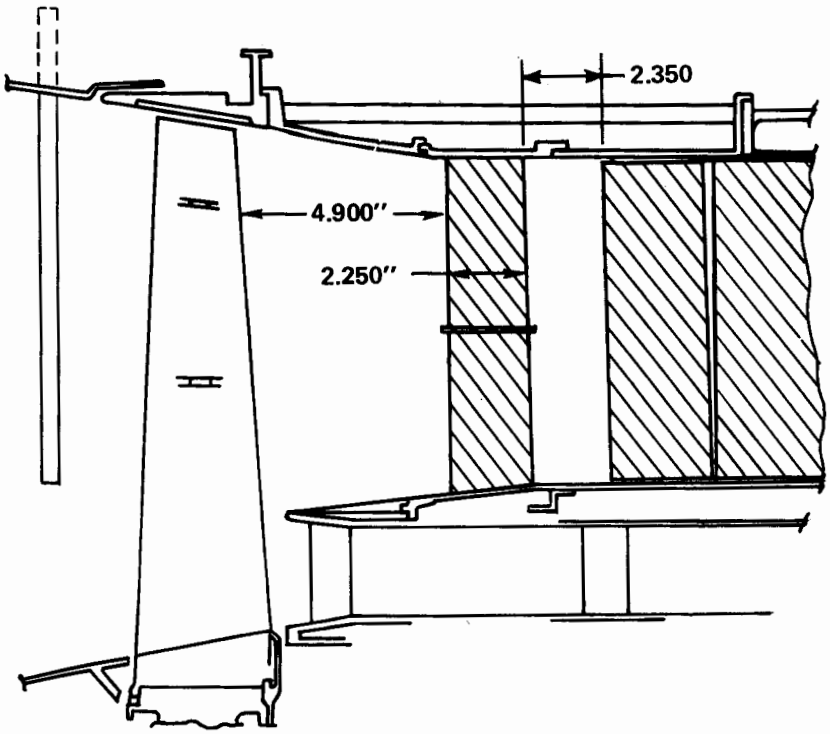

12 a

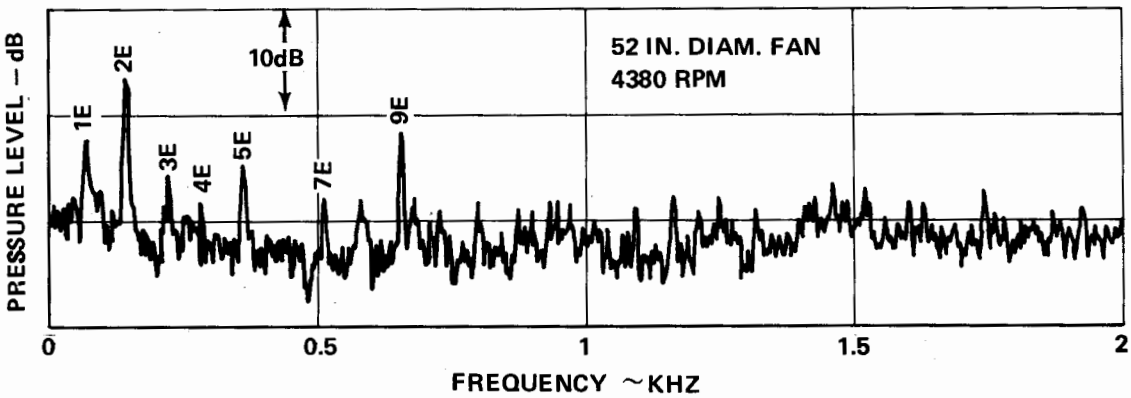

12 b

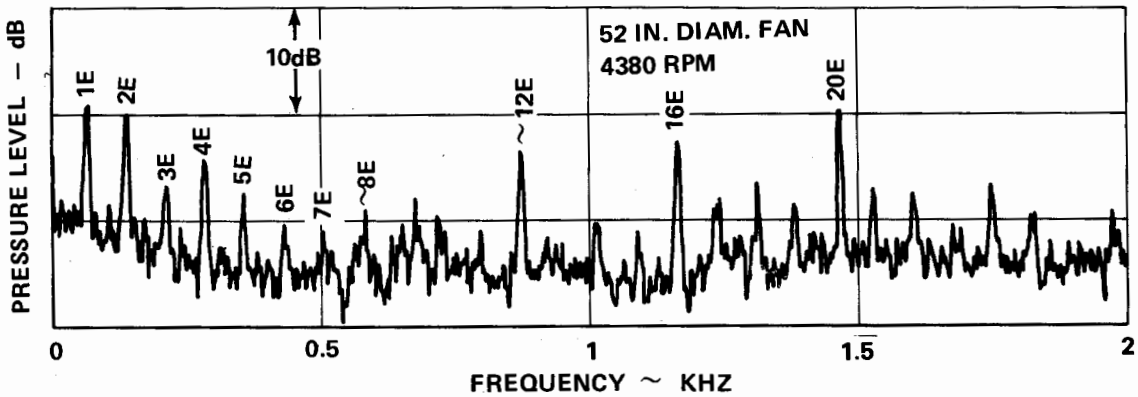

12 c

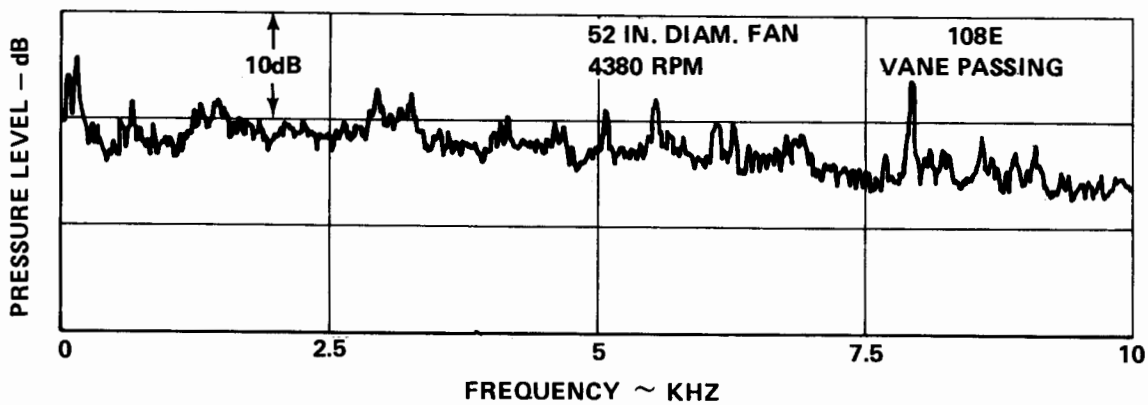

Fig. 13 10 KHz Analysis Showing 108E Stator Spike

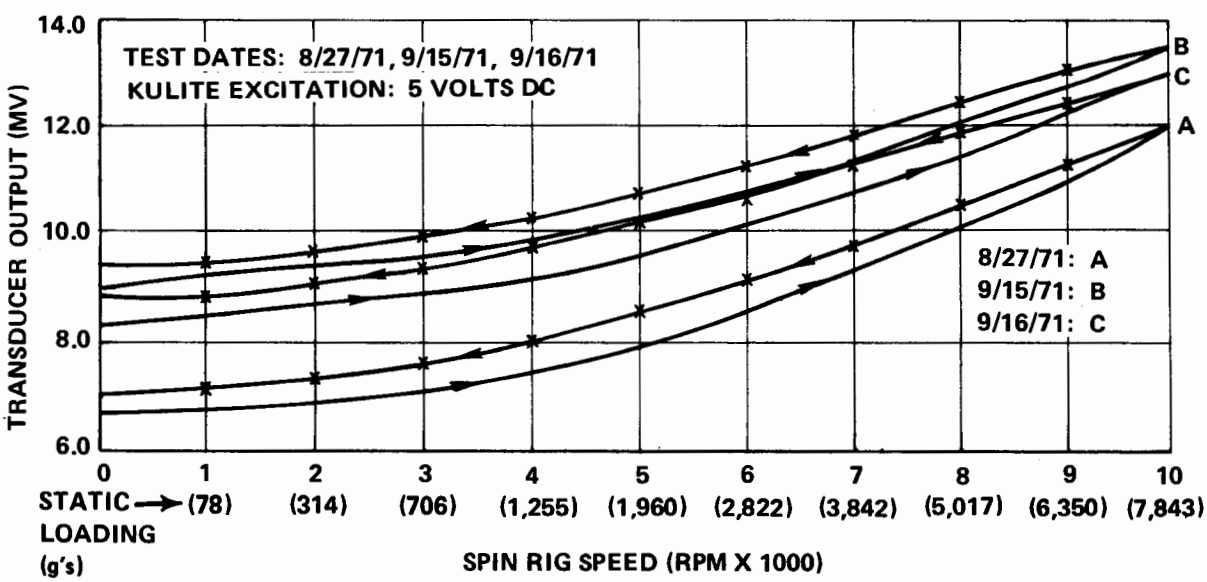

Fig. 14 Transducer Output as a Function of g-Load

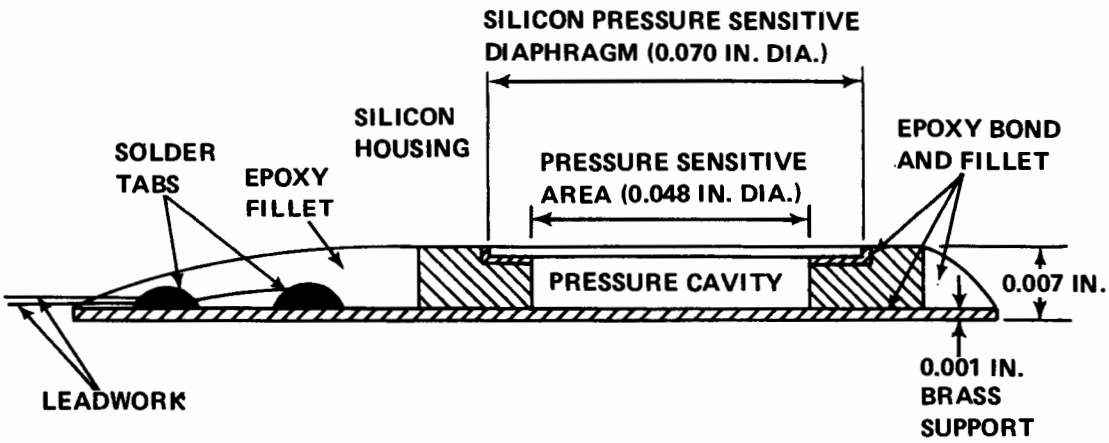

Fig. 15 Schematic of New Low Profile Transducer

TABLE I

RPM (X1000)	8-27-71 Zero Output (mv)	8-27-71 % F.S. Output	9-15-71 Zero Output (mv)	9-15-71 % F.S. Output	9-16-71 Zero Output (mv)	9-16-71 % F.S. Output
0	5.34	6.74	7.14	9.01	6.63	8.37
1	5.38	6.79	7.35	9.27	6.77	8.54
2	5.49	6.93	7.44	9.39	6.91	8.72
3	5.69	7.18	7.64	9.64	7.13	9.00
4	5.97	7.53	7.88	9.94	7.35	9.27
5	6.34	8.00	8.20	10.35	7.67	9.68
6	6.86	8.66	8.59	10.84	8.13	10.26
7	7.43	9.38	9.11	11.50	8.64	10.90
8	8.11	10.23	9.70	12.24	9.22	11.63
9	8.85	11.17	10.25	12.93	9.86	12.44
10	9.65	12.18	10.88	13.73	10.45	13.19
9	9.09	11.47	10.50	13.25	10.02	12.64
8	8.44	10.65	10.04	12.67	9.56	12.06
7	7.80	9.84	9.52	12.01	9.04	11.41
6	7.30	9.21	9.02	11.38	8.55	10.79
5	6.79	8.57	8.60	10.85	8.11	10.23
4	6.40	8.08	8.24	10.40	7.75	9.78
3	6.09	7.68	7.96	10.04	7.44	9.39
2	5.87	7.41	7.69	9.70	7.24	9.14
1	5.74	7.24	7.57	9.55	7.11	8.98
0	5.68	7.17	7.53	9.50	7.07	8.92

Variation of E_{Po} with g-load for the first cycle of each series.

Transducer Excitation: 5 Volt D.C.

Load Cycle 0 - 10,000 RPM : 0 - 7842.9 g's

Full Scale Output: 79.23 mv at 25 psi.

TABLE II

g Load Cycle	RPM (X1000)	8-27-71 Zero Output (mv)	8-27-71 % F.S. Output	9-15-71 Zero Output (mv)	9-15-71 % F.S. Output	9-16-71 Zero Output (mv)	9-16-71 % F.S. Output
	0	5.34	6.74	7.14	9.01	6.63	8.36
1	10	9.65	12.18	10.88	13.73	10.45	13.18
	0	5.68	7.17	7.53	9.50	7.07	8.93
2	10	9.69	12.23	10.95	13.82	10.60	13.38
	0	5.78	7.29	7.83	9.88	7.39	9.32
3	10	9.70	12.24	10.95	13.82	10.70	13.50
	0	5.86	7.39	7.85	9.91	7.42	9.36
4	10	9.78	12.34	11.04	13.93	10.62	13.40
	0	5.90	7.44	7.87	9.93	7.43	9.38
5	10	9.82	12.39	11.06	13.96	10.69	13.49
	0	5.95	7.51	7.91	9.98	7.49	9.45
6	10	9.80	12.37	11.08	13.98	10.66	13.45
	0	5.97	7.53	7.94	10.02	7.48	9.44
7	10	9.89	12.48	11.08	13.98	10.67	13.46
	0	6.02	7.60	7.93	9.99	7.47	9.43
8	10	9.88	12.47	11.05	13.94	10.64	13.43
	0	6.01	7.58	7.93	10.01	7.47	9.43
9	10	9.93	12.53	11.12	14.03	10.68	13.48
	0	6.00	7.57	7.97	10.06	7.50	9.46
10	10	9.88	12.47	11.14	14.06	10.75	13.56
	0	6.01	7.58	7.98	10.07	7.54	9.51

Transducer Excitation: 5 Volts D.C.

Full Scale Output: 79.23 mv at 25 psi

Load Cycle 0 - 10,000 RPM : 0 - 7842.9 g's

This is a preprint of a paper intended for publication in a journal or proceedings. Since changes may be made before publication, this preprint is made available with the understanding that it will not be cited or reproduced without the permission of the author.

UCRL - 73427
PREPRINT

LAWRENCE LIVERMORE LABORATORY
University of California/Livermore, California

DIAGNOSTIC PROBLEMS RELATED TO MEASUREMENTS NEAR UNDERGROUND NUCLEAR DETONATIONS

Clifford W. Olsen

February 23, 1972

This paper was prepared for presentation at The 7th Transducer Workshop, Albuquerque, New Mexico, April 4-6, 1972

DIAGNOSTIC PROBLEMS RELATED TO MEASUREMENTS NEAR UNDERGROUND NUCLEAR DETONATIONS*

Clifford W. Olsen

Lawrence Livermore Laboratory, University of California
Livermore, California, 94550

ABSTRACT

Problems associated with measuring data related to containment of underground nuclear detonations are very difficult to overcome, particularly with a line-of-sight pipe from the detonation. Measurements of pressure, temperature, radiation, acceleration, particle velocity, and shock position are routinely fielded; we have also attempted measurements of other variables, such as gas density and optical transparency or brightness. One must have a system that can survive high radiation levels, high shock loading, large electromagnetic noise pulses, and blast conditions; a system with frequency response in the 50-100 kHz region, while having 1500-4000 ft of cable between the transducer and the electronic recording equipment, is also required. The reliability and dynamic range of the system must be large, since channel limitations do not often permit much redundancy. Contributing to the problem is the poor predictive capability for many of the variables, particularly along a line-of-sight. Dynamic calibration of pressure and temperature sensors is necessary for understanding the data, and a particular problem is the inability to measure stagnation properties and flow velocities

---

*Work performed under the auspices of the U.S.Atomic Energy Commission.

behind the first arrival. The current practices at LLL with regard to transducers and cables are discussed, along with the shortcomings of the present capability.

INTRODUCTION

A nuclear explosion creates a severe environment in which transducers must function. Pressure, temperature, radioactivity, and electromagnetic interference levels are very high, and their time-derivatives (frequency contents) are also large. In this paper I discuss some problems encountered in diagnosing the effects of underground detonations and in diagnosing the response of related hardware. Determining the performance of the explosive itself is a different topic, which will not be considered.

Most of the material reported herein is from experience with line-of-sight (LOS) experiments, in which a pipe leads from the source to various exposure stations. After irradiation, the pipe must be closed to prevent blast damage or other damage to the experiments and to prevent release of radioactive debris to the environment. Detailed diagnostics are required to document the performance of the system, to provide design criteria for future systems, and to compare performance with calculated behavior.

The various parameters will be discussed individually. Some problems associated with the measurements will be pointed out, and some desirable measurements that are not now feasible will be mentioned.

GAS-PRESSURE MEASUREMENTS

Gas-pressure measurements cover a wide range of conditions from blast pressure in the 10^4-psi region to quasistatic measurements in the few-psi region. All transducers are required to be very insensitive to shock, radioactivity, and temperature, if good data are to be obtained.

Figure 1 shows the measured acceleration, temperature, and radiation at a location where a pressure measurement was required. (The problems associated with obtaining the data in Fig. 1 will be ignored temporarily.) Acceleration of 500-700 g, gas temperatures to $\sim 1100^{\circ}C$, and radiation levels of 10^5-10^8 R/hr make up a severe environment for a pressure transducer. Figure 2 shows the output of three pressure transducers subjected to the environment; Fig. 3 shows the output from two transducers that experienced the radiation and acceleration, but not the heating. The end of the data is presumably the result of cable damage rather than transducer damage, but the cause cannot be firmly established. The data were all recorded with a 0-20 kHz bandwidth, except for a 0-4 kHz bandwidth for the radiation data in Fig. 1.

As can be seen, the pressure records tend to correlate more with the accelerometer than with each other. The temperature, about $1100^{\circ}C$, is far above the normal range for the great majority of pressure transducers. Obviously there is no good pressure record from the location under discussion. In Fig. 3, one transducer appears to have a usable output, but the other is clearly suspect: it shows negative pressures. Comparison of the two records shows that, except for polarity, they are similar, and the seemingly good

record becomes questionable. These two records were from 1000-psia units with a specified shock sensitivity of 0.001% of full scale per g-unit. The early noise from about 10-45 msec is nearly 10% of full scale, implying accelerations approaching 10^4 g. Apparently the transducer shock sensitivity is at least an order of magnitude above specification; other problems, however, such as cable noise due to shock, may contribute or even dominate, since the signal in question is only about 20 mV.

Because of economic constraints that manifest themselves as limitations in recording capability, one transducer may be required to serve as a blast-pressure transducer and also as a quasistatic pressure transducer, often for superheated steam.

Figure 4 shows two relatively long-term pressure records obtained at the same location. The divergence of the records at late times could be the result of inadequate temperature compensation, radiation effects, or a combination of these and other factors.

Electromagnetic energy coupled into the diagnostic system can result in anything from a spike of a few tens of microseconds duration to destruction of the transducer or signal-conditioning hardware. Figure 5 is a photomicrograph of a foil gauge element on a transducer, damaged at zero time. Similar damage resulted when a 1-μf capacitor charged to 500 V was discharged through a gauge element, although, in practice, the breakdown appears to be between the element and the case. Grounding at the transducer and floating of the recording system have minimized such occurrences.

TEMPERATURE MEASUREMENTS

Temperature data are required for several applications and range from dc measurements with ±0.5°C accuracy near room temperature to fast measurements of over 1000°C where accuracy to within 10% would be quite acceptable. Thermistors, while sensitive to shock and radiation, generally work well for the dc measurements. The blast measurements can be made with either thermocouples or resistance thermometers. Resistance thermometers have been unsatisfactory because the film is prone to damage when mounted for a blast measurement. The thermocouple is most used; the presently used design is a coaxial couple with the tip slightly recessed. The problems with thermocouples are the relatively low signal levels and the difficulty in getting a reference junction that can withstand the shock, radiation, etc.

RADIATION MEASUREMENTS

Radiation data are obtained with an ionization chamber that has an electrometer tube mounted inside the chamber. Data are considered to be good to about ±50%, but the detector has a usable range of about 10^8 with a logarithmic output. The two main problems with the system are shock sensitivity and drift. Because of the wide dynamic range, a small drift may be a factor of 2 or more in apparent radiation level. Significant accelerations will make the output go negative (relative to increasing radiation); and, because of the extremely high impedance of the chamber-electrometer system, recovery may take as long as a minute. Fortunately,

radiation speeds recovery; and, in a high radiation field (>10^3 R/hr), recovery can be as fast as a few milliseconds. In such cases the record merely appears noisy, as in Fig. 1. The most significant complication occurs in determining the arrival time of a modest radiation level, since separating natural recovery from radiation-induced recovery is not always simple, as can be seen in Fig. 6. The large dynamic range makes the system attractive, even with its shortcomings.

ACCELERATION AND VELOCITY MEASUREMENTS

Accelerometers and velocity gauges are generally of the carrier-system, variable-reluctance type. These systems are relatively immune to electromagnetic-pulse interference and to radiation damage, and they have proved to be very reliable below a few hundred g and below a few hundred feet per second. Their major shortcoming is their upper frequency limit of about 500 Hz.

Piezoresistive accelerometers are also used, particularly where frequency response is important. These accelerometers have functioned well, although they are susceptible to electromagnetic-pulse noise or damage. Complete loss of a data channel at zero time is occasionally observed, as is a zero shift. A sensitivity shift has been suspected on a few occasions; but, in general, agreement between the variable reluctance and piezoresistive units is satisfactory. Cross-axis sensitivity is occasionally a problem with both types of transducers.

SHOCK POSITION INDICATORS

Two basic techniques are used to define arrival time. Very close measurements are usually done with shorting pins. These systems are straightforward, and the only real problem is to avoid shorting by ionization from high radiation levels. The other technique measures the position of the 0.5-1.0 kbar level by finding where a coaxial cable is crushed. The crush position as a function of time gives a shock-propagation curve; SLIFER (Shorted Location Indicator by Frequency of Electrical Resonance) and CLIFFER (Cable Length Indication Found From Electrical Reflection) are two means of locating the crush position.

The SLIFER equipment measures the cable in the tank circuit of an oscillator, and the frequency-vs-time can be converted to shock position. The CLIFFER equipment determines the cable length by measuring the round-trip time for a pulse sent down the cable. By this method a cable length is found in the manner of a time-domain reflectometer about every 9 μsec. The CLIFFER has a digital output and is still under development. Usable cable lengths are up to 175 ft for the SLIFER and up to 300 ft for the CLIFFER. Because in both cases the cable to be measured usually goes quite near the working point, both systems are subject to loss of data from electromagnetic noise, particularly in the first millisecond. This problem has been minimized for the SLIFER by using band-pass filters. The SLIFER oscillator and the CLIFFER pulser are subject to shock-induced noise, since significant accelerations can reach the units before the cable is crushed.

MEASUREMENT NEEDED BUT BEYOND OUR CURRENT CAPABILITY

Gas density, flow velocity, stagnation parameters, and very sharply rising blast pressures are presently beyond our measurement capability. The blast-pressure problem is one of finding a radiation and electromagnetic-noise-resistant transducer with a frequency response of >200 kHz. Figure 7 shows the output of one candidate that failed. The transducer saw a static level of ~150 psia, a dynamic peak of ~700 psia, and a radiation level roughly 10^{-3} of that in which the unit would be required to operate.

Measurement of stagnation parameters is currently impractical because of damage incurred by looking down the line of sight. Damage can be caused by x rays, neutrons, or debris. A few methods have been investigated; but they require too much area in the line of sight, and such space is at a premium.

The gas density and flow velocity are needed for calculating the flow. A gas-density transducer has been tested, but it has a relatively low frequency response and a limited temperature range. The transducer had a driven vibrating beam and measured vibration amplitude with strain gauges.

Flow velocity can now be measured only as a time-of-arrival difference of a distinct feature at two locations. Flow velocity as a function of time at a given point would be a very valuable measurement; a mass flowmeter would also be of great value. The transducer system must be able to operate in relatively high radiation fields, must not require space across the line of sight, must have a wide dynamic range, and must be operable on a pipe ranging from 6 to 50 in. in diameter.

CABLES AND SIGNAL CONDITIONING

Most of the signal-conditioning equipment is commercially available; the only major exceptions are the radiation detectors and the SLIFER and CLIFFER. Where possible, dual constant-current excitation is used with half-bridge transducers. Lead-resistance effects are compensated for, and three-wire rather than four-wire cabling is used. The weight and expense saved by the three-wire system are appreciable when cable lengths of 1500-4000 ft for 20-50 channels are considered. The frequency response of long cables affects the system; different cables are used, depending upon the required data. More often than not, the termination of data-acquisition seems to be the result of cable damage rather than transducer damage.

SUMMARY

The various requirements that have been mentioned seem to add up to a ''We'd all like that, but be reasonable'' list. Shock sensitivity of the transducers and of the adjacent cable should be <0.01% full scale per g. Temperature compensation should be over a wider range than is usually available, and high temperature transients should have minimal effects. In summary, transducers that will respond rapidly to a single stimulus are needed. Because of computerized data analysis, transducers need not have a linear response. An interesting alternative is a group of transducers, no one of which measures a single variable, but whose outputs can be automatically processed (in real-time or later) to yield measurements of individual parameters.

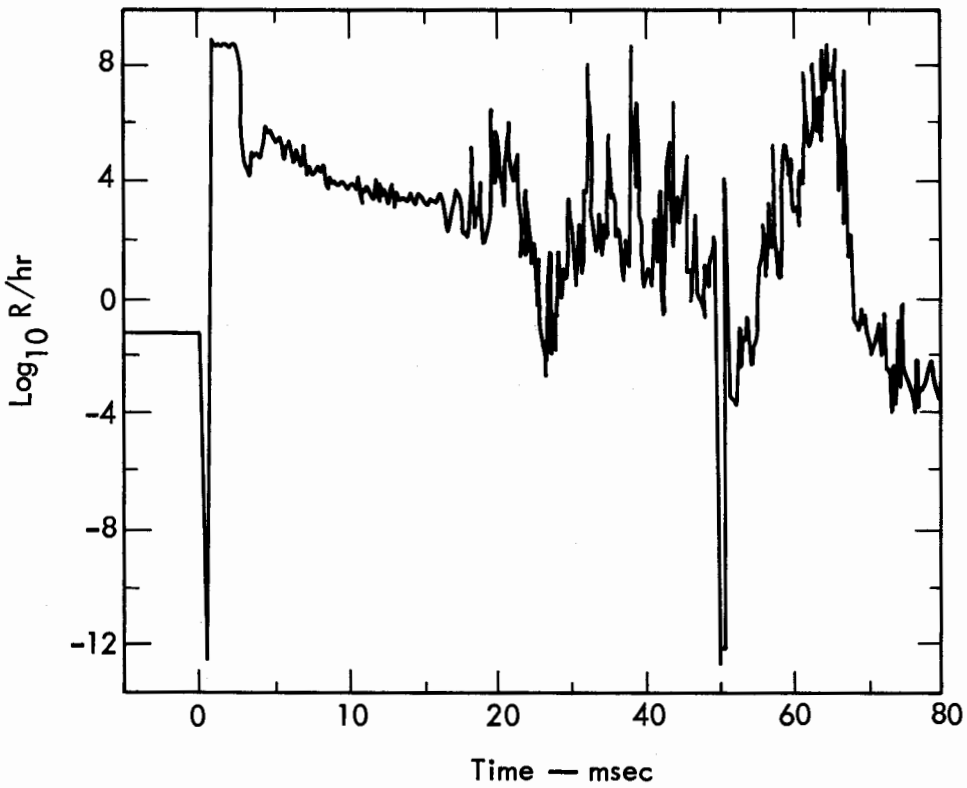

Fig. 1a. Radioactivity, temperature, acceleration, and velocity measured on a line-of-sight pipe 260 ft from a detonation. (1a) Radiation level. (1b) Gas temperature. (1c) Pipe acceleration. (1d) Integration of 1c. (The noise spike at zero time on Fig. 1c was not integrated.)

Olsen - Fig. 1a.

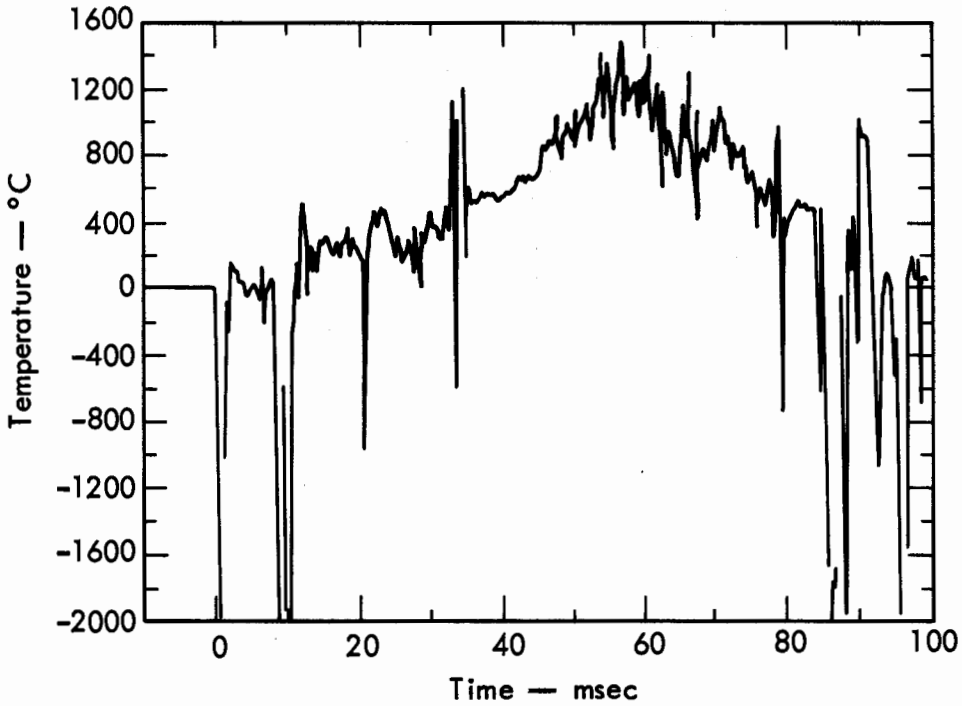

Fig. 1b.

Olsen - Fig. 1b.

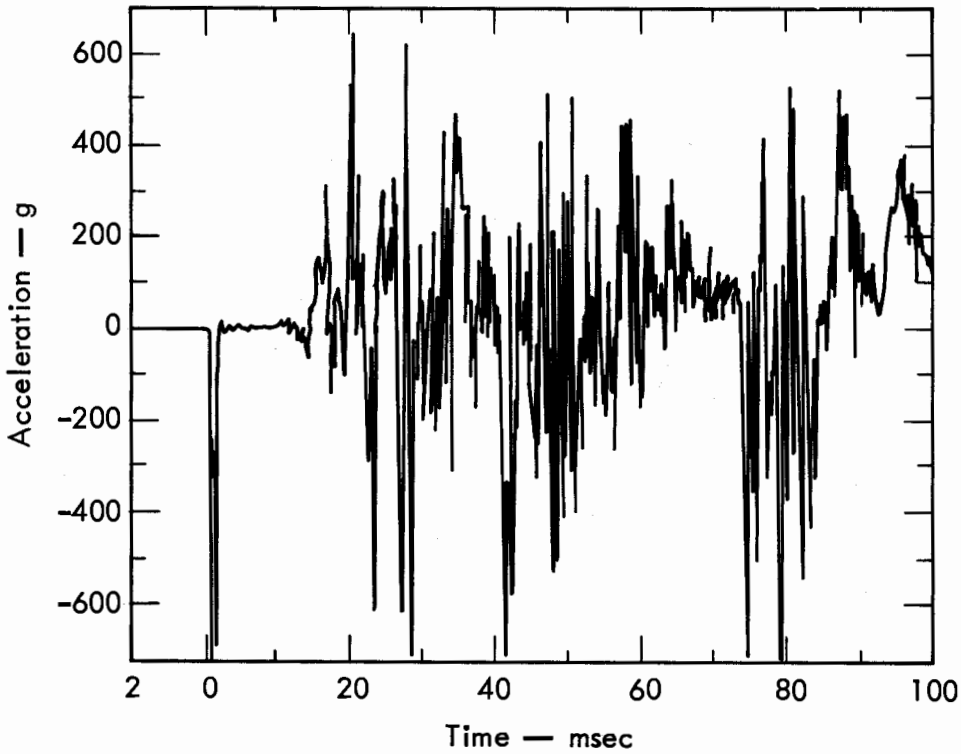

Fig. 1c.

Olsen - Fig. 1c.

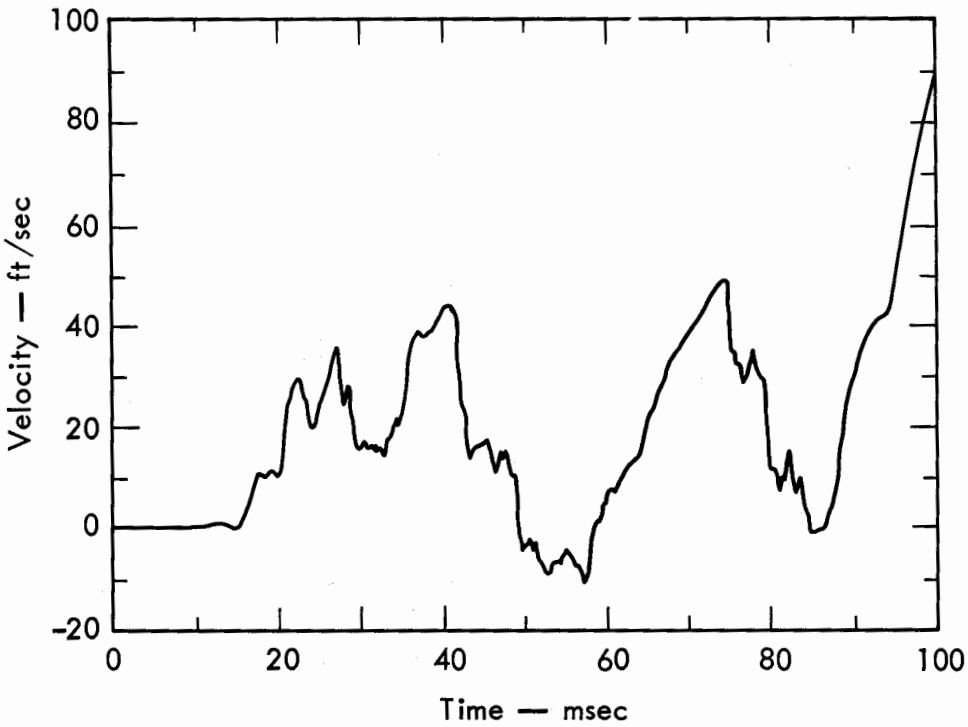

Fig. 1d.

Olsen - Fig. 1d.

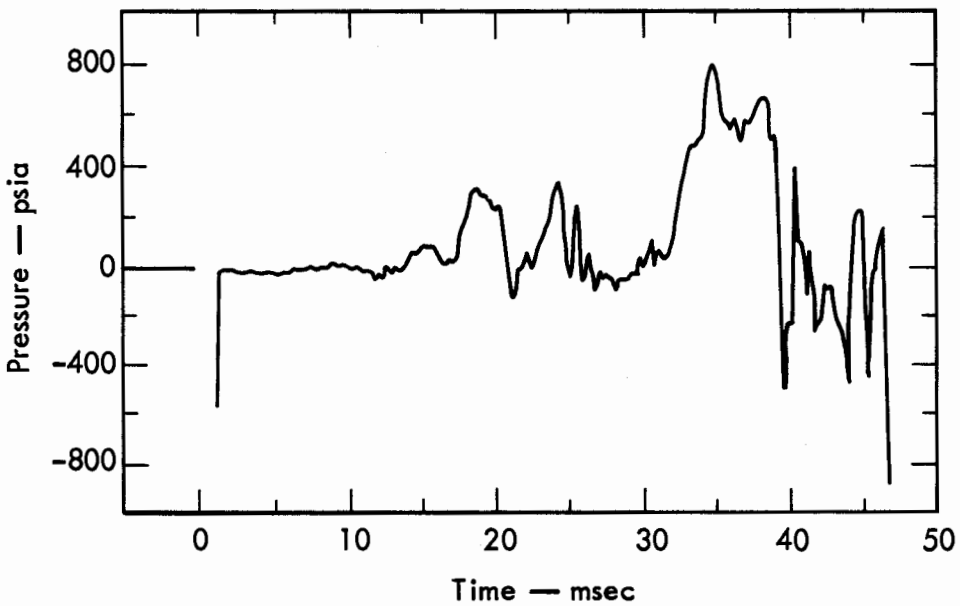

Fig. 2a. Gas pressure measured at the same location as in Fig. 1 by three piezoresistive transducers from different manufacturers. (2a) 0-5000 psia unit. (2b) Another 0-5000 psia unit. (2c) 0-2500 psia unit.

Olsen - Fig. 2a

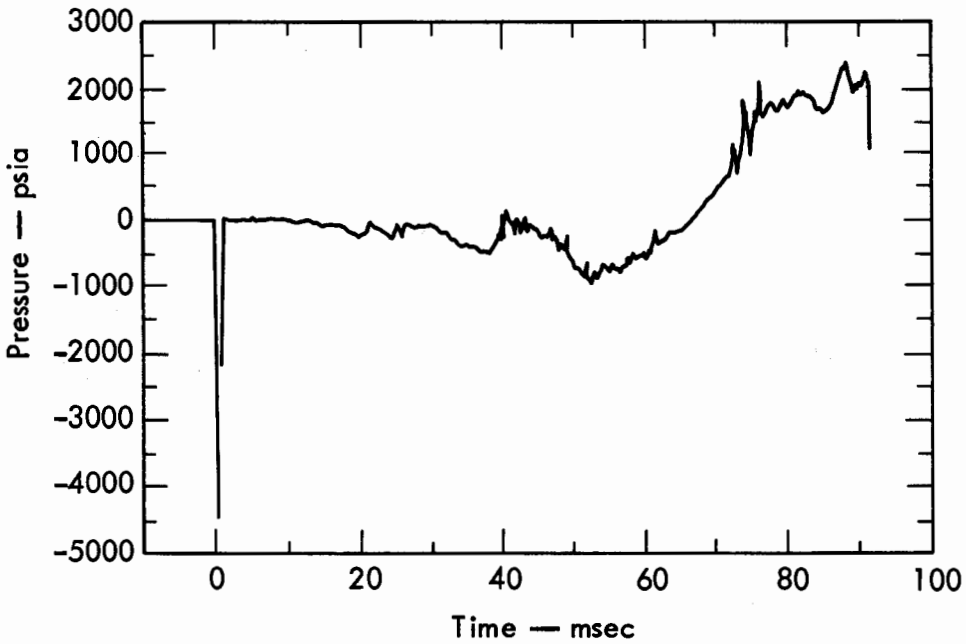

Fig. 2b.

Olsen - Fig. 2b.

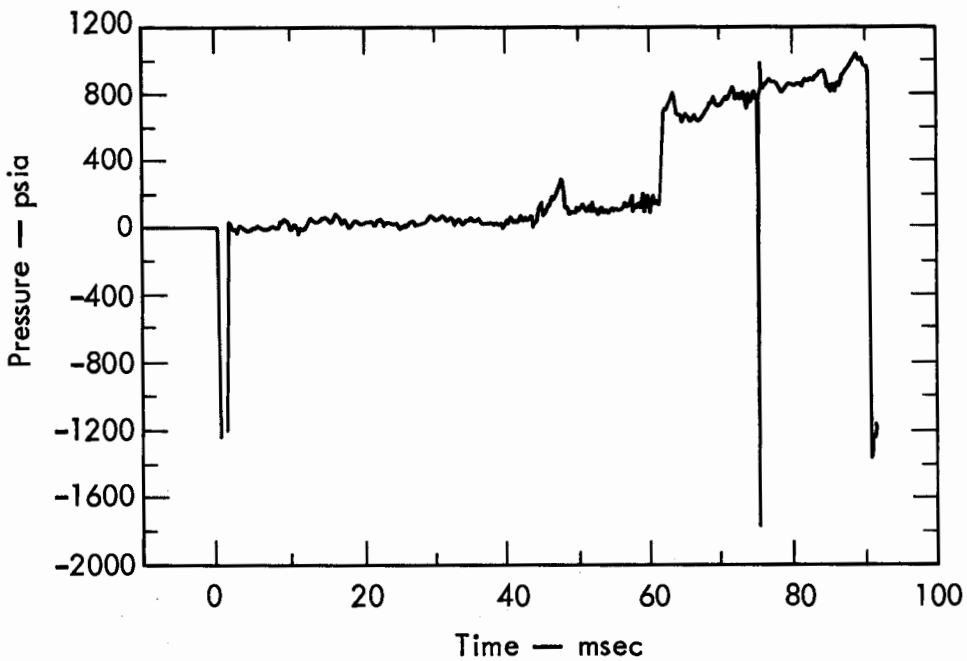

Fig. 2c.

Olsen - Fig. 2c.

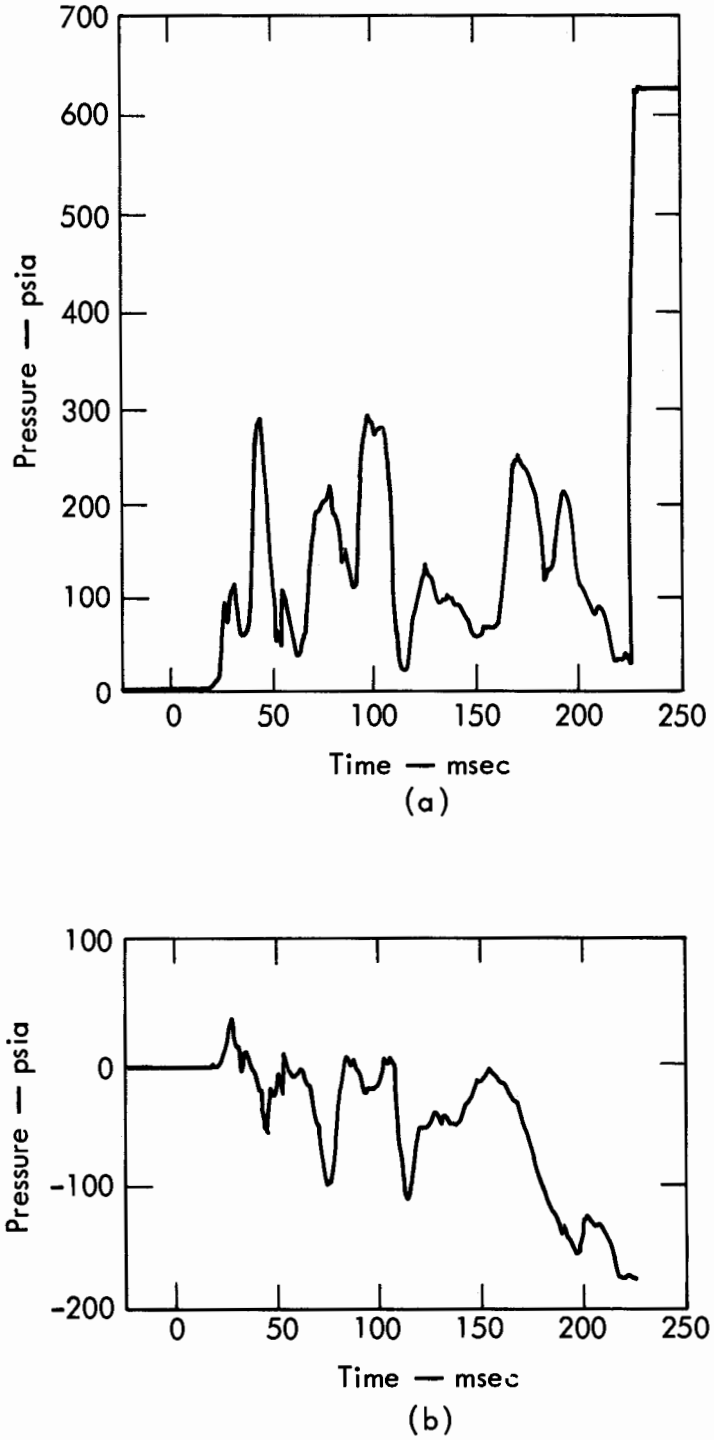

Fig. 3. Records from two gas-pressure transducers at the same location, showing shock sensitivity. No real-gas pressure was observed.

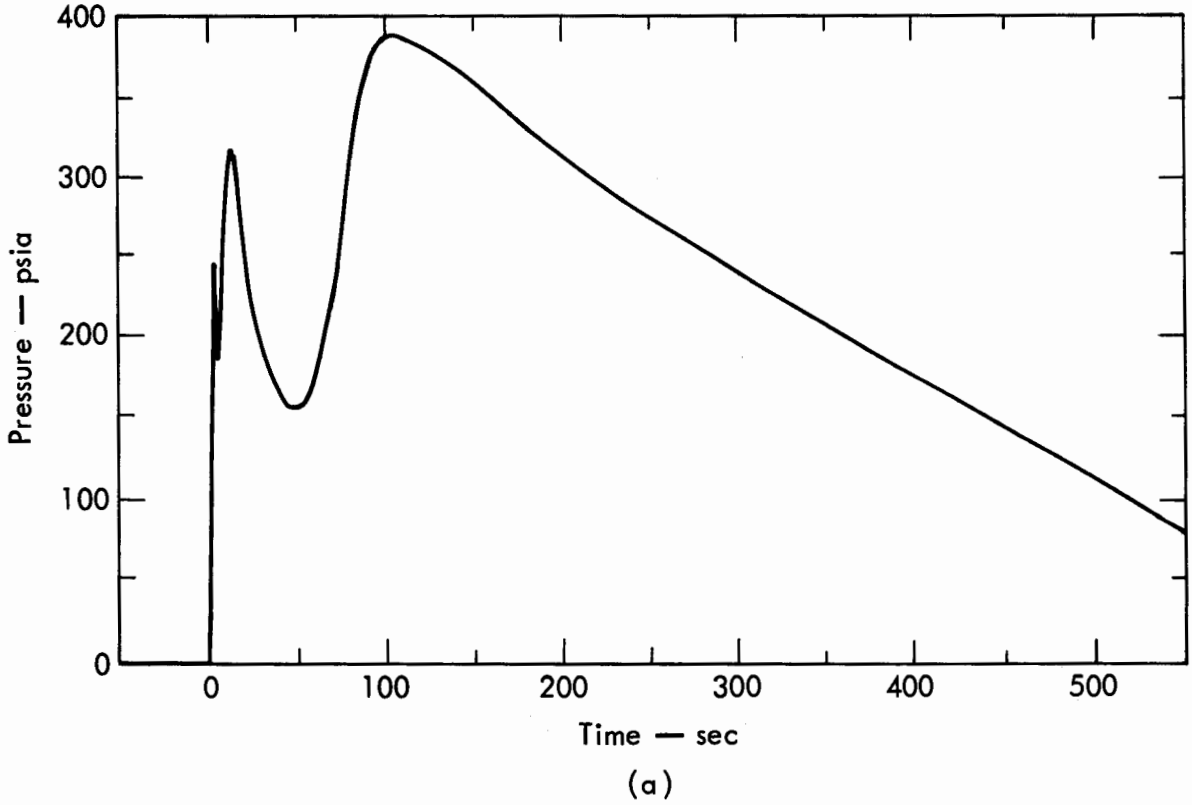

Fig. 4a. Records from two gas-pressure transducers at the same location, showing late-time disagreement. (4a) 0-1000 psia unit. (4b) 0-500 psia unit recorded with 0-333 psia range.

Olsen - Fig. 4a.

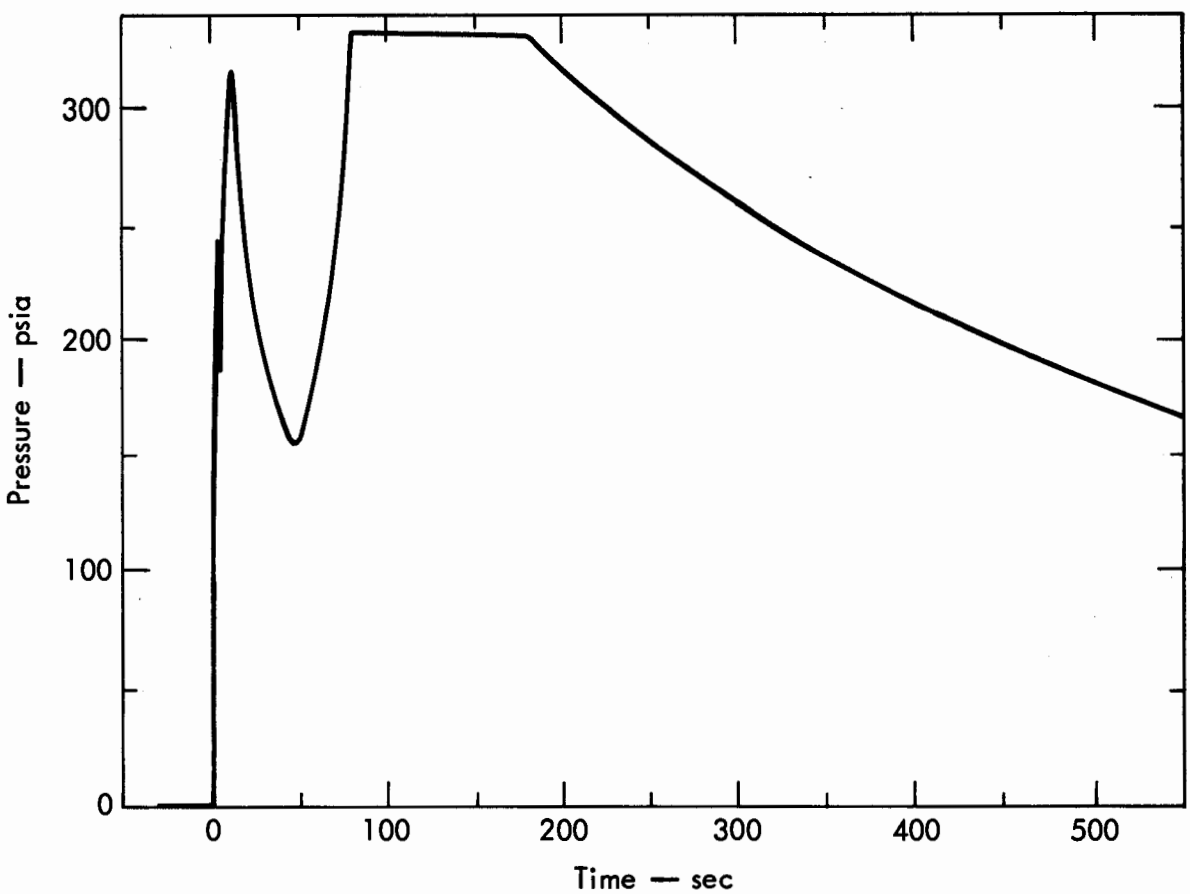

(b)

Fig. 4b.

Olsen - Fig. 4b.

Fig. 5. Condition of a foil gauge element damaged by electromagnetic-pulse energy.

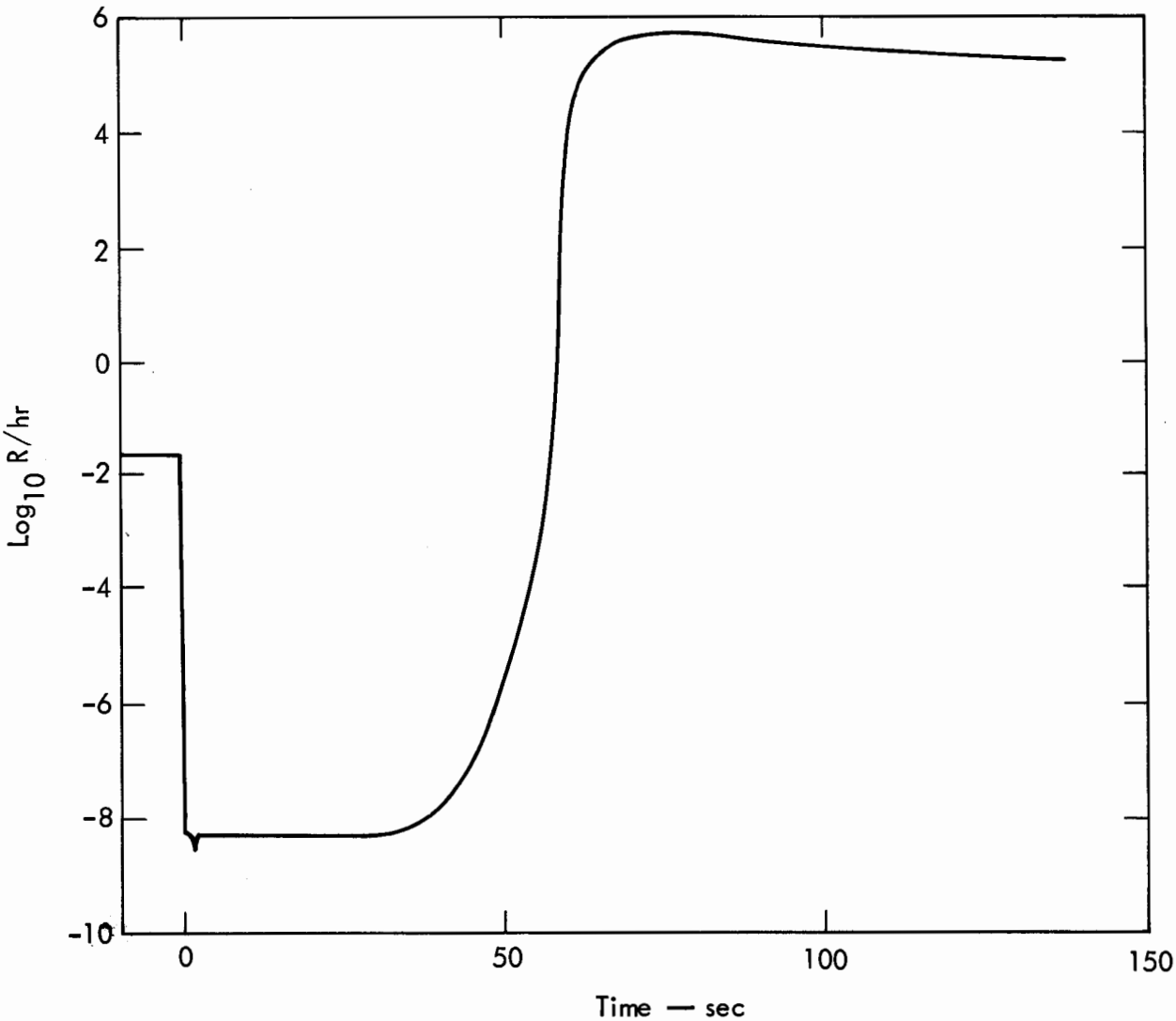

Fig. 6. Output of ionization-chamber radiation detector, showing negative output due to shock sensitivity and abnormally long recovery time.

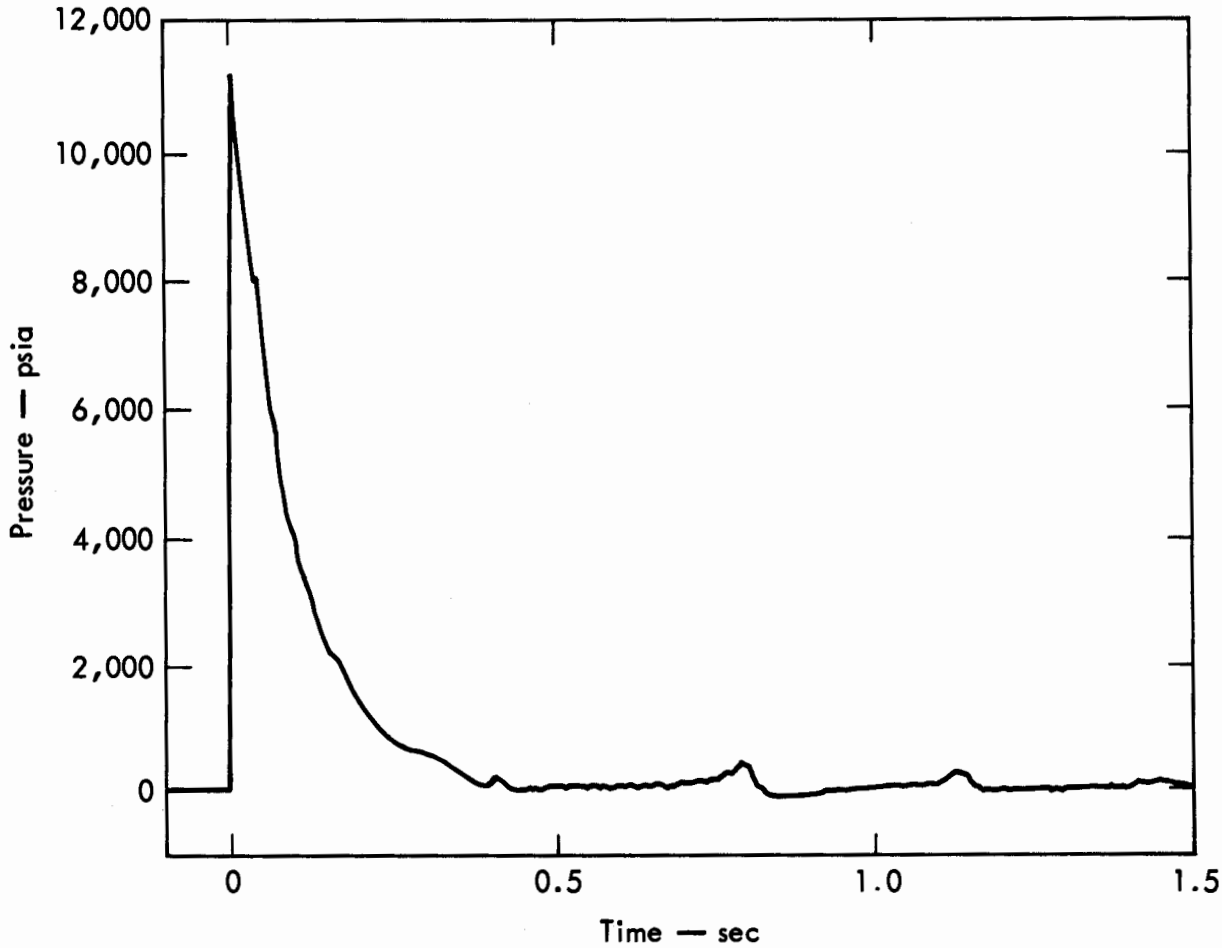

Fig. 7. Output of 0-10,000 psia blast-pressure transducer, showing full-scale transient due to radiation sensitivity.

DISTRIBUTION

LLL Internal Distribution

Roger E. Batzel	
J. E. Carothers	
B. D. Faraudo	
L. S. Germain	
R. A. Heckman	
P. A. House	
B. C. Hudson	
V. N. Karpenko/C. E. Walter	
D. E. Lord	2
W. H. McMaster	
D. M. Norris	
C. W. Olsen	50
J. N. Shearer	
L. I. Starrh	
J. M. Thomsen	
V. E. Wheeler	
LBL Library	
TID File	30

External Distribution

K. F. Bailey
L. E. Davies
M. A. Hatch
J. A. Kalinowski
H. E. Lee
R. W. Slice
EG&G, Inc.
San Ramon, California

G. D. Burgon
L. M. Kelly
M. E. Reed
EG&G, Inc.
Mercury, Nevada

Technical Information Center, Oak Ridge 2

NOTICE

"This report was prepared as an account of work sponsored by the United States Government. Neither the United States nor the United States Atomic Energy Commission, nor any of their employees, nor any of their contractors, subcontractors, or their employees, makes any warranty, express or implied, or assumes any legal liability or responsibility for the accuracy, completeness or usefulness of any information, apparatus, product or process disclosed, or represents that its use would not infringe privately-owned rights."

LOF:edas

Some Problems Associated with Airblast Pressure Transducers

by Michael M. Swisdak, Jr.
Naval Ordnance Laboratory
Silver Spring, Maryland

ABSTRACT

This paper presents several examples illustrating some of the problems associated with the interpretation of airblast pressure transducer signals. Or, "Is your gage measuring what you think it's measuring?". The problems discussed include: 1) the undesirable tendency of a pressure transducer to respond as a thermal gage when placed in a thermal/blast environment, 2) the design inadequacies of many transducers to measure negative pressures or to operate at reduced ambient pressures, 3) the inability of many airblast pressure transducers to adequately respond to long duration phenomena and still accurately reproduce the characteristics of the shock front.

All of these problems have been encountered and solutions found in work performed at the Naval Ordnance Laboratory.

INTRODUCTION

A subtitle for this paper might well be, "Is your pressure transducer measuring what you think it's measuring?". Quite often, unfortunately, the answer is no. Specifically, I would like to talk about three problem areas: 1) the effect of a

transient thermal pulse on transducer response, 2) the design inadequacies of many transducers to measure negative pressure or to operate at reduced ambient pressures, and 3) the inability of many pressure transducers to adequately respond to long duration phenomena and still accurately reproduce the characteristics of the shock front.

THERMAL RESPONSE

We encountered the thermal response of pressure transducers early in nuclear explosion blast measurements and later on high explosive measurements when even a passing cloud could change the temperature of a gage giving a baseline shift. Lately, too, we've encountered this problem when trying to make pressure measurements close to a detonating high explosive charge.

The problem was most recently encountered during tests conducted in the explosively-driven conical shock tube at the Naval Ordnance Laboratory. For those of you unfamiliar with this facility, it is one in which a small quantity of high explosive, fired under confinement, produces a sector of a spherical blast wave having many of the characteristics of a spherical blast wave in free air from a much larger quantity of explosive. Because of the nature of the conical shock tube, the hot explosion products and debris travel to distances which are much greater than those of a comparable free air explosion.

We have measured the temperatures of these explosion products at varying distances from the explosion source and have found temperatures to be as high as 800°F, with the temperatures remaining above ambient for several hundred milliseconds. Figure 1 is a typical temperature-time profile recorded 119 ft from the explosion source in our CST. It shows a thermal pulse rising to a maximum in about 80 msec. What would be the effect of this pulse on typical pressure transducers? Figure 2 shows two pressure-time traces. The lower trace is from a gage with a small thermal response, while the upper trace is for a gage with a massive thermal response. The peak on the lower trace corresponds to 34 psi, and on the upper to 35.5 psi. The sweep rate is the same for both traces--50 msec/mark. The thermally-responsive gage is a piezoelectric gage whose crystal is made of lead-zirconate-titanate. The nonthermally responsive gage is a variable reluctance gage with a metal diaphragm. The thermal pulse has caused two readily noticeable effects, which must be taken into account when the record is interpreted: 1) the positive duration is shortened and 2) the negative phase is so greatly distorted as to make analysis meaningless. What can we do about this problem? Ideally, the solution would be to choose a gage with no thermal response. However, this cannot always be done; when it cannot, then at least the thermal characteristics of the gage should be determined. Knowing these characteristics, then choose gages with the smallest thermal response and take steps to reduce it further.

How do we characterize the thermal response of a gage? A simple, standardized test is needed. To meet this requirement, we have used a thermal simulator. The device is very similar to that used at the gage laboratory at the Defence Research Establishment, Suffield. The gages were exposed to the thermal radiation of a General Electric M-3 flashbulb with the gage face at a distance of about 1" from the center of the flashbulb. Although this technique does not fully simulate exposure to the contact surface of a blast wave, it does yield thermal response information whereby some figure of merit for comparison purposes can be generated.

In order to determine if the gages were responding to some other nonthermal radiative phenomena, the thermal simulator was also operated with the rear of the gage facing the flashbulb. If the gage is responding to a nonthermal pulse from the simulator, then it should still react in this configuration. In every case, there was no response to the nonthermal pulse.

Through the use of this device, we have characterized the thermal response of gages from many manufacturers. We have found that, even among gages from the same manufacturer, the response varied tremendously--from little or no response to that pictured in the upper trace of Figure 2. Some gages respond to the thermal pulse as if it were a negative pressure, while others respond as if it were a positive pressure.

What then, are some of the "fixes" which can be applied externally to the gages to reduce their thermal response? Among the things we have tried are: 1) teflon tape, 2) silver paint, 3) black electrical tape, 4) RTV silicone potting compound, and 5) pyrolytic graphite. We have tested most of these in our thermal simulator. Figure 3 shows the result of this type of test. The solid curve is the response of a lead zirconate-titanate piezoelectric gage--the same type of gage illustrated in Figure 2. The dashed curve in Figure 3 is the response of the same gage with a piece of 3-mil teflon tape placed across the diaphragm. This particular gage responds to the thermal pulse as if it were a negative pressure. The thermally produced peak pressures in the unprotected gage corresponds to -97 psi; with the teflon tape, the peak is reduced to -73 psi.

The most effective fix which we have found is pyrolytic graphite. To use this, the gage is recessed slightly, and a disc of graphite about 1/16" thick is cemented to the diaphragm. Not as effective, but much easier to apply, are the silver paint and the black electrical tape; moreover, both the paint and the tape can be applied to gages other than flush diaphragm sensors.

The major disadvantage of all of these "fixes" is the fact that they all add mass to the gage and thus reduce the high frequency response of the gage. In the final decision, you will have to make trade off--how much high frequency response you are willing to sacrifice as opposed to how much thermal protection is wanted.

EFFECT OF NEGATIVE PRESSURE OR OPERATION AT REDUCED AMBIENT PRESSURE

There are several problems involved in the measurement of negative pressures or the operation of transducers at reduced ambient pressures. Consider again, the blast wave produced by the conical shock tube. The negative phase of the wave is often made deeper (i.e., more negative) than the free field situation by the rarefaction wave which propagates from the open end of the tube. Figure 4 shows such a wave; the peak positive pressure is 19.5 psi, while the peak negative is -8.0 psi. Is this number, -8.0 psi reasonable? If this were a free-air situation the answer would be "No". We would only expect about -2 psi. The difference is due to three things: 1) the rarefaction wave propagating down the tube from the open end of the CST, 2) the effect of the thermal pulse discussed earlier, and 3) the effect of the construction of the gage. Calculations (Ref. 2) show that the expected negative pressure in the CST should be between -4 and -7 psi.

The thermal pulse will tend to bias the gage response, so that the negative pressures will look deeper than they actually are. Figure 5 is the general layout of the type of gage used to record Figure 4. During construction, the load plate is cemented to the hollow, cylindrical piezoelectric material by means of epoxy cement in such a way that the tubular crystal is sealed with 1 atmosphere of pressure inside. The seal is designed for axial compression but not tension. Therefore, when sufficient negative pressures are applied

the load plate separates from the crystal rendering the gage useless.

This same design problem is encountered when this type of gage is used at reduced ambient pressures. Under this condition, the gage response is quite erratic and often after exposure to the reduced pressure the gage is seriously damaged.

This design problem often exhibits itself during gage calibration. If the gage calibration curve is extrapolated to subambient conditions, the calculated sensitivity of the gage differs greatly from that actually measured at these conditions.

Two of the possible alternative solutions to this problem, present themselves: 1) use a hermetically sealed gage or 2) use a vented gage. We find that our best results are obtained with a vented gage. In the vented gage, both sides of the sensing element are allowed to be at the same ambient conditions before the shockwave arrives (thus allowing no air to be trapped inside the gage). When this type of gage has been used in the CST to duplicate the measurements shown in Figure 4, a negative pressure of -5.9 psi is consistently obtained.

In any event, if a gage is going to be used to measure negative pressures, it should be calibrated at negative pressures--the positive pressure calibration should not be relied upon. Moreover if a gage is to be used at reduced ambient pressures, its operation should at least be tested at these reduced pressures to be certain its operation is reproducible.

THE NEED FOR HIGH FREQUENCY AND LOW FREQUENCY RESPONSE

For a given situation, one generally considers only the need for good high frequency response or good low frequency response gages--usually with one being sacrificed for the other. Can this cause misinterpretation of the phenomena being recorded? The answer is yes--sometimes. I would now like to touch on one such situation.

When measuring very low pressure (below 0.1 psi), long duration (several hundred millisecond) pulses from explosions, the most common recording instrument is a microbarograph. This instrument has a nominal frequency response from DC to 50 Hz. Figure 6 is the typical output from a microbarograph for this type of wave. Is the phenomenon recorded here a "shockwave"? On first examination, most of us would say "yes", because we see what appears to be an almost discontinuous (within the capability of the recording system) change in pressure. However, let us look a little more closely. The timing marks are 200 msec apart, so that in actuality we can see nothing of the real rise-time of the phenomenon. Because of the poor high frequency response of this instrument, no details of the shock front can be expected to be seen. In actuality, until recently, there were not many who even questioned if there was a fine structure to the shock front. Figure 7 was recorded using a transducer with a frequency response from DC to 10 Khz. The upper trace is at the same gain and sweep speed as Figure 6, and we can see that the traces are quite similar. The lower trace on

Figure 7 is an expanded sweep of the first 130 msec of the trace. It is evident that what we were calling a shock in the upper trace is not. What we have is a true shock, followed by a slowly rising compression wave. The peak "disturbance" is the same magnitude on both traces, but the peak "shock" overpressure is much less.

Thus, in this case, to truly define the phenomena, both good high frequency response and low frequency response gages are needed.

SUMMARY

These are but three problems which can face the airblast transducer user. There are undoubtedly many other problems which other users have encountered and resolved.

In summary, the best advice is, "Know your transducers". Learn how they are constructed and how they respond to stimuli other than pressure. Above all, calibrate your gages under the same conditions that they will actually be used.

REFERENCES

1. J. C. Muirhead, "Testing Blast wave Pressure Transducers", Research Techniques and Instrumentation, Vol 1, No. 7, 1966

2. Conical Shock Tube Facility, NWL Progress Report No. 2, Jun 1967

Figure 1

TEMPERATURE-TIME PROFILE AT THE 119 FOOT STATION IN THE NOL 180 FOOT CONICAL SHOCK TUBE

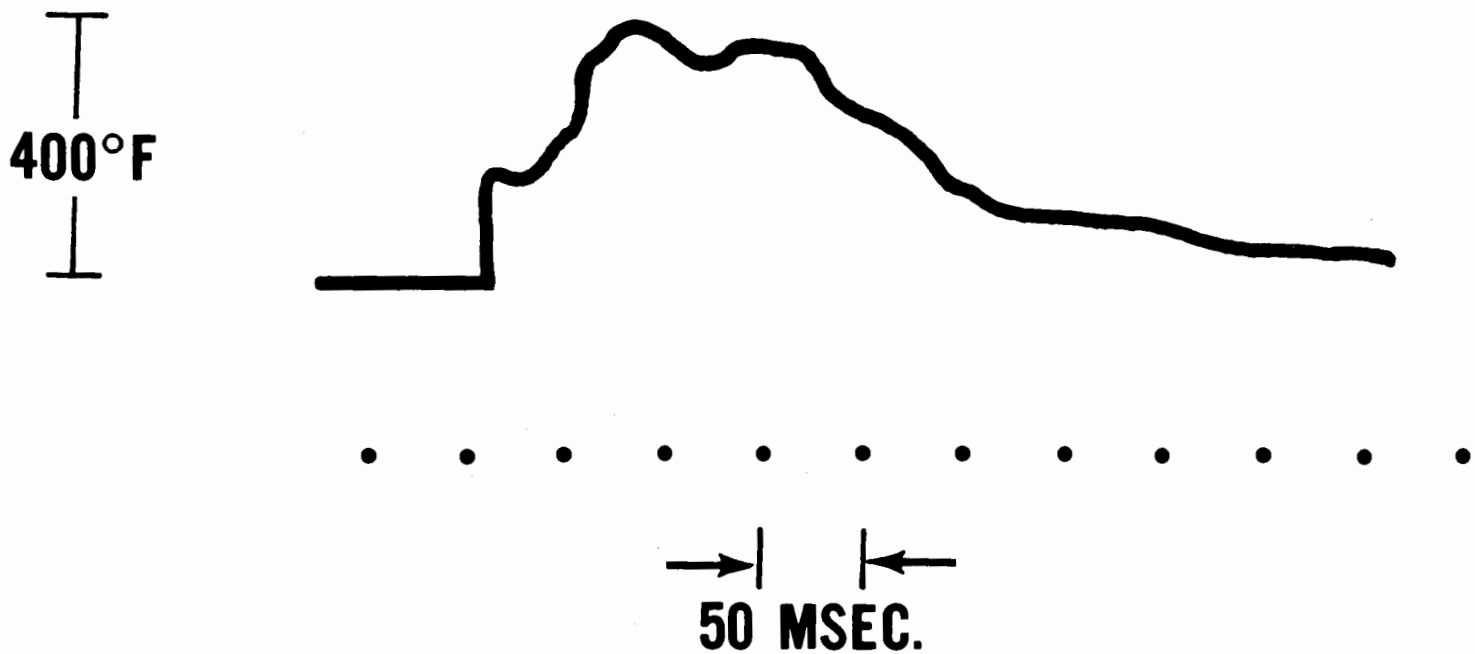

Figure 2

EFFECT OF THERMAL ENVIROMENT ON PRESSURE-TIME RECORDS

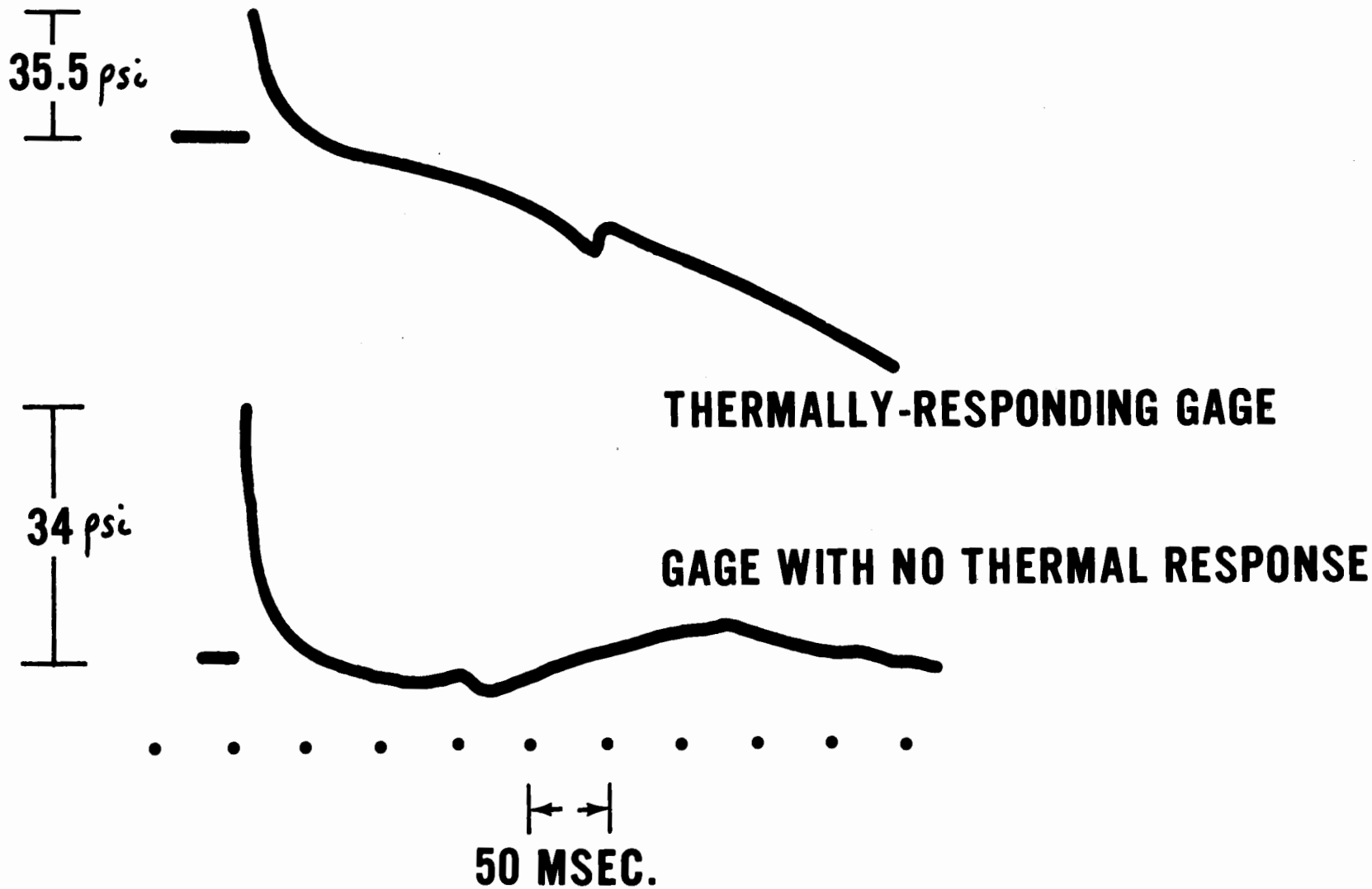

Figure 3

THERMAL RESPONSE OF TYPICAL PRESSURE GAGE– WITH AND WITHOUT THERMAL PROTECTION OF TEFLON TAPE

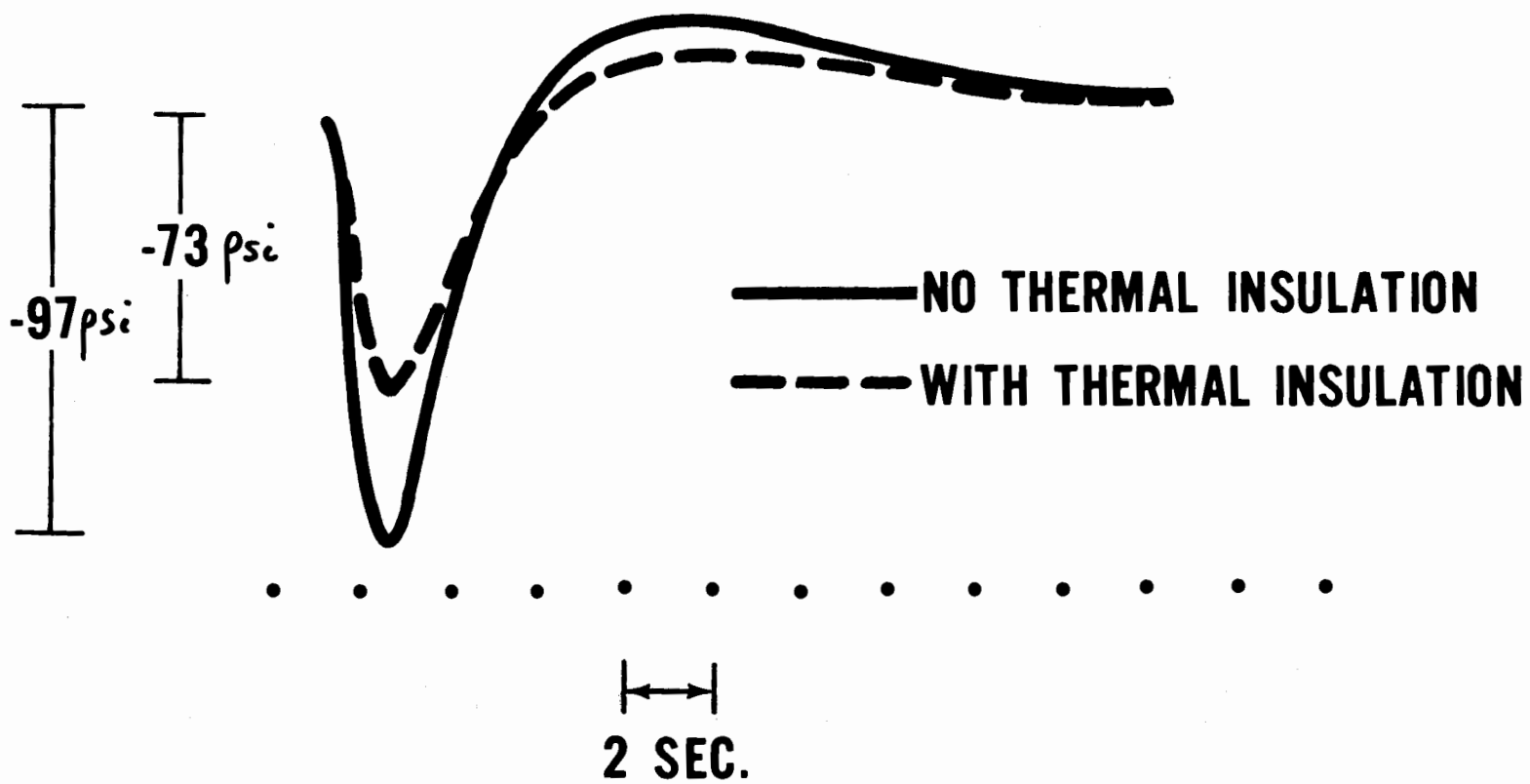

Figure 4

PRESSURE-TIME RECORD SHOWING LARGE NEGATIVE PRESSURE

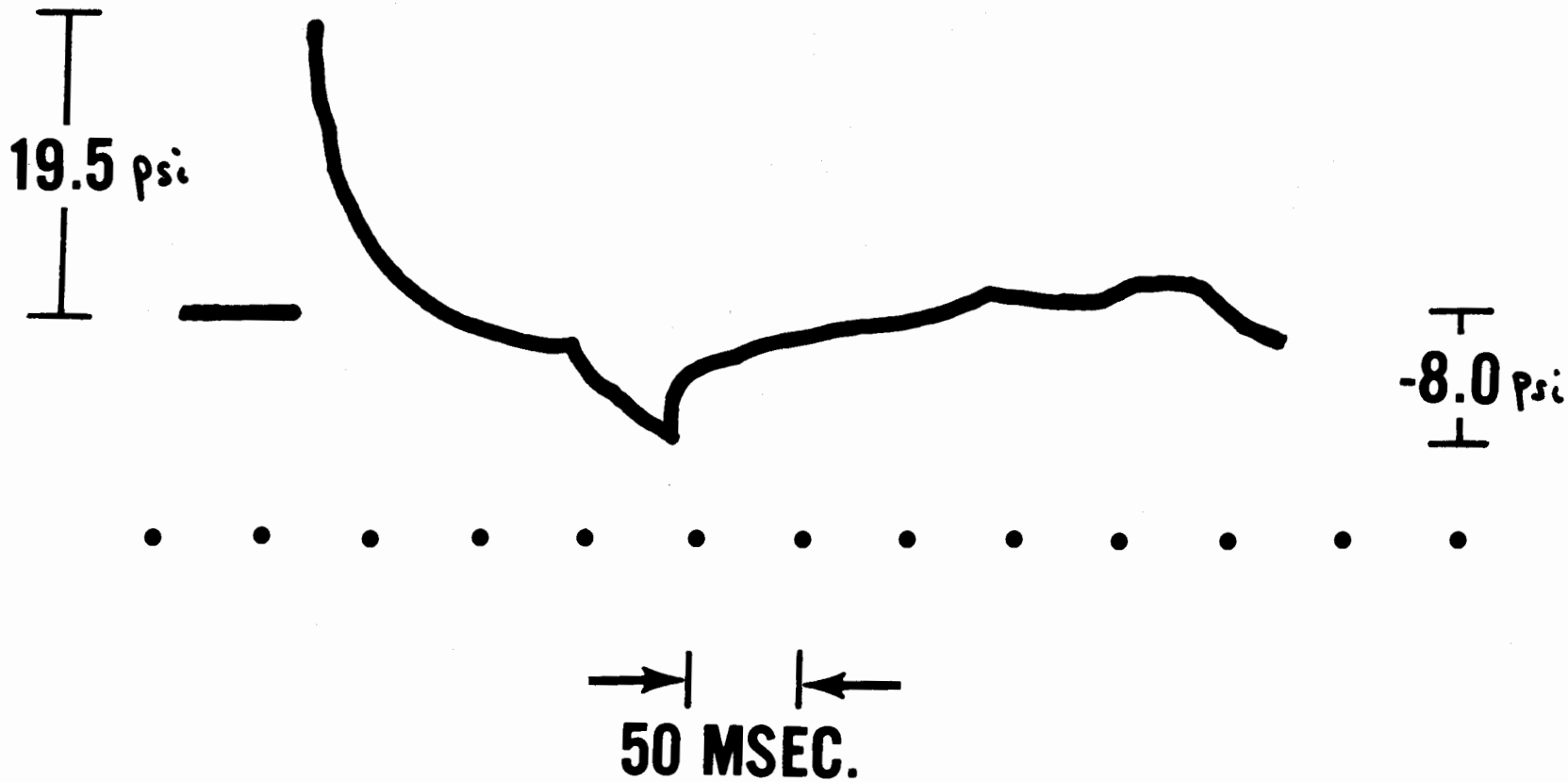

Figure 5

CROSS-SECTION OF A TYPICAL PRESSURE GAGE

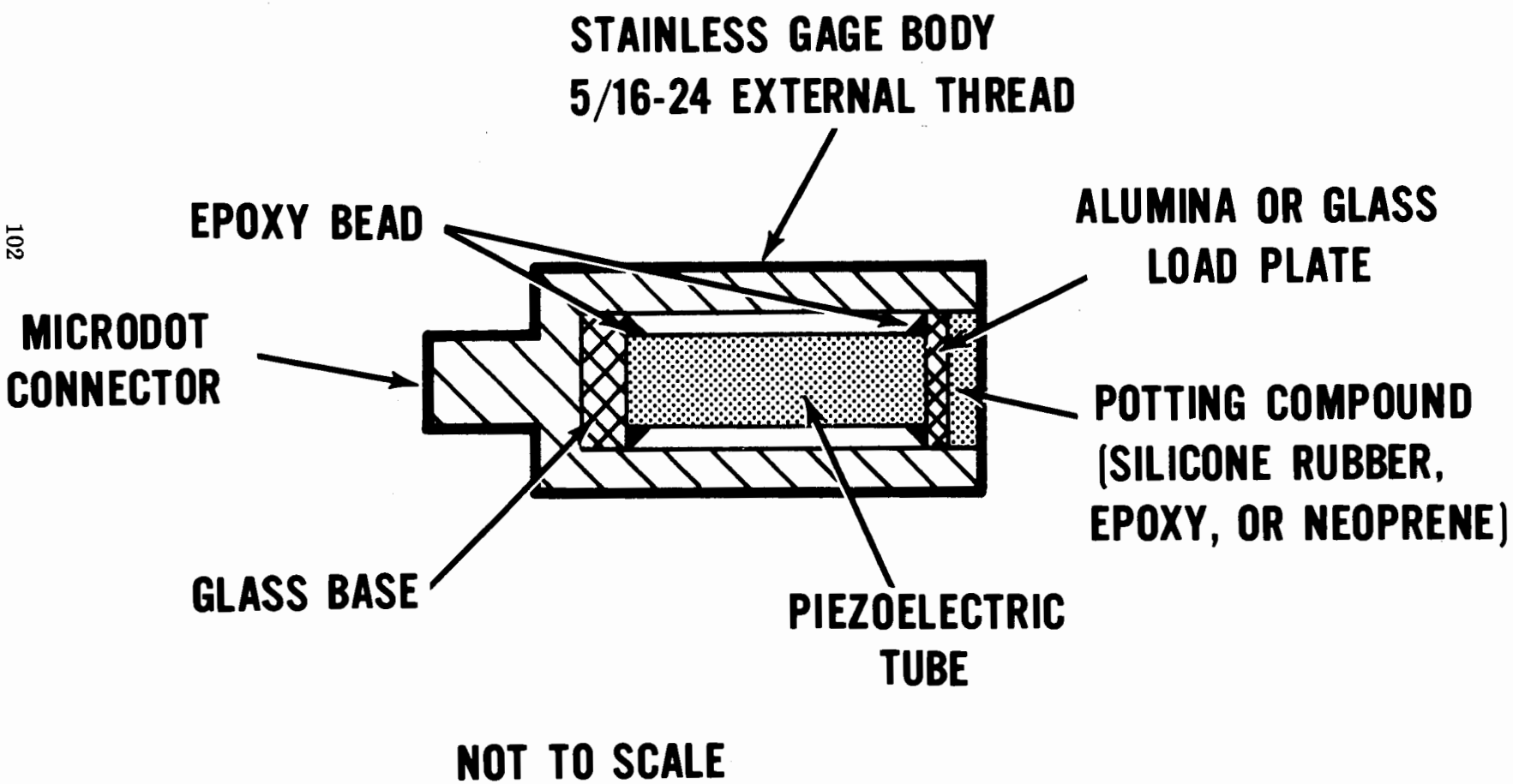

Figure 6

MICROBAROGRAPH RECORD OF LONG DURATION PRESSURE PHENOMENA

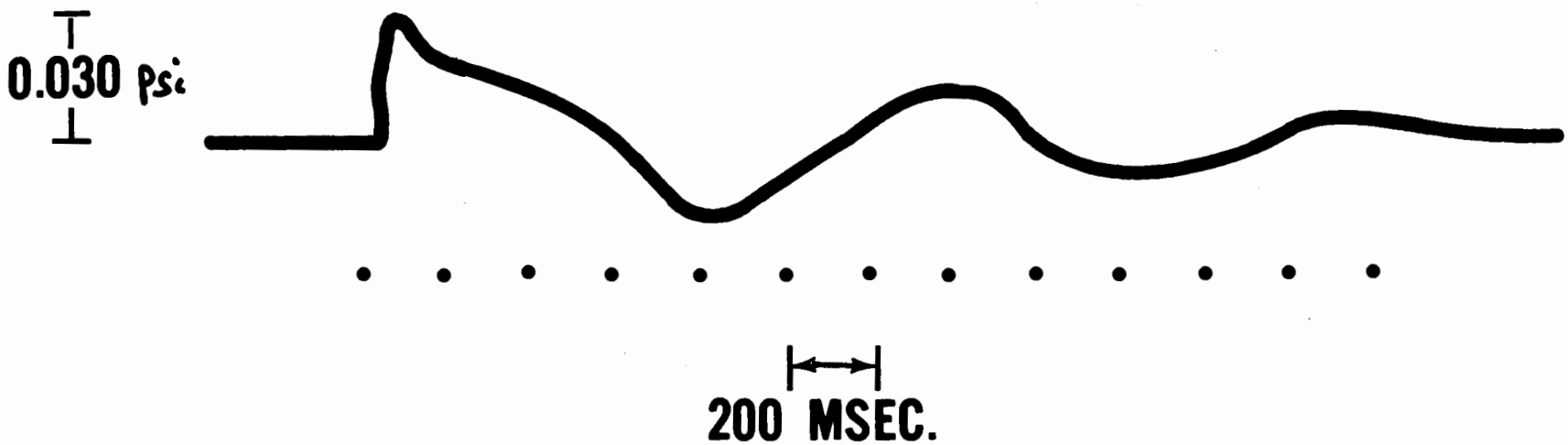

Figure 7

PRESSURE-TIME RECORD SHOWING SHOCK FRONT FINE-STUCTURE

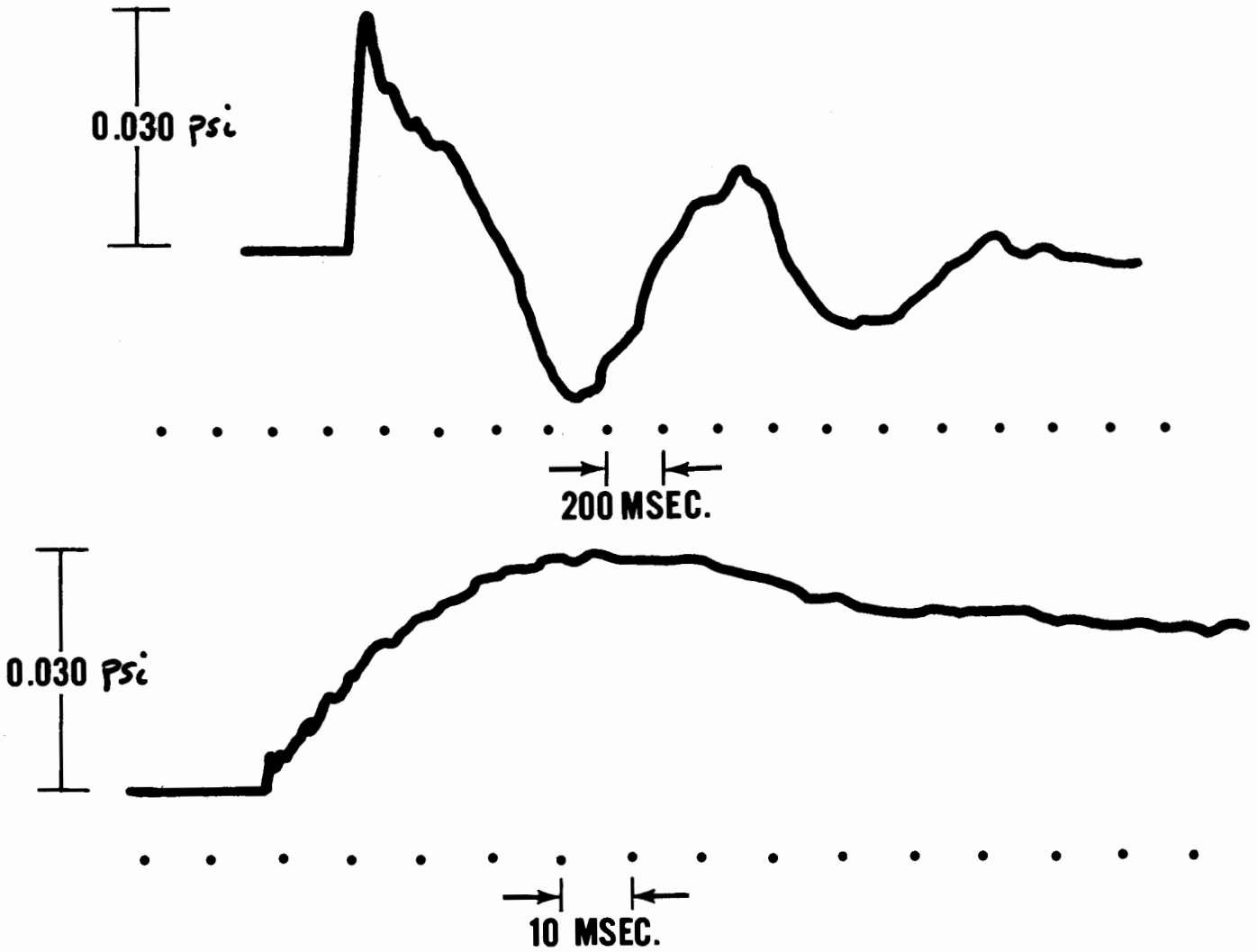

DISCUSSION SUMMARY

SESSION I

Measurement Systems

Papers: Shrager, Rollins, Carrol, Olson, and Swisdak

Highlights of Discussion Period:

Many problems interfere with the efficient layout of a measurement system. One of them is economics, which prevents desired redundancy, limits the number of background measurements and calibrations, and forces cheap transducers into the system. Often the problem is time -- measurements have to be made on short notice, and the only transducers available are the ones in the stockroom. Confidence in the output of a non-ideal measurement system can be vastly increased if reasonable correlation between different parameters can be shown, e.g., skin temperature and deceleration of a reentry vehicle.

There are also nontechnical problems: Communications between the manufacturer of transducers and the user is often sadly lacking. The user of our measurements, the systems engineer, does not really understand how difficult good measurement systems are and is often quite cavalier and unreasonable in his demands. We, in turn, often do not have the guts to talk back to him, let him justify his demands, and call his bluffs.

We are often the problems ourselves, overlooking simple approaches in favor of the complicated routine measuement systems. (Comments in this vein were of course promoted by Shrager's talk.)

In any nonconventional environment cables create severe problems in the system. (See Olson's talk.) It is evident that there is no meaningful laboratory test for cables which matches field conditions. One participant, measuring shock loading of cables, found that the results were the same with and without transducers.

The dynamic pressure transducers are in a similar boat: There is no generally accepted test procedure, five or six different methods are used. Presently, ferroelectric transducers are very much in fashion due to their high sensitivity and high output. We should remember that they are very temperature sensitive and that ceramics are not stable with time.

Speaking about calibration: Laboratory calibration can be quite meaningless if the transducers then stay on remote locations for months until they are used.

Last but not least, and mostly in connection with cable measurements, the compensation problem was discussed: Measure the background "separately and subtract it from the total measurement." It had to be agreed, that the difference was not necessarily the signal.

SPECIAL FACTORS IN THE APPLICATION OF SEMICONDUCTOR TRANSDUCERS

by

J. C. Kicks, Manager,
Sales & Product Engineering
Kulite Semiconductor Products, Inc.
Ridgefield, New Jersey

This paper deals with some typical considerations which confront the instrumentation engineer when he is given a particular measurement task.

The first task is to decide whether to use on-hand equipment or purchase new.

Assuming the decision is to purchase, what factors would precipitate selection of a diffused diaphragm or semiconductor gaged unit?

In the case of the diffused diaphragm unit, the following parameters are superior to the unbonded or bonded foil or semiconductor gaged transducer:

1. Output - substantially higher
2. Size and Weight - significantly reduced
3. Natural Frequency - much higher
4. Output due to Vibration - insignificant
5. Frequency Response - flat, without spurious resonances
6. Survivability - very high due to miniaturization

In the case of the semiconductor gaged transducer, two points emerge as superior to the foil or unbonded type:

1. Output - higher
2. Size and Weight - reduced

Now, the instrument has to be bought, usually through an engineering-material chain-of-command. The buyer usually requires that a specification be written. The spec usually emerges considerably different from that originally composed by the engineer due to supervisory "interpretation" and material department "boilerplating." The supplier receives this document and quotes accordingly.

If the spec is short, sharp and to the point with a minimum of embellishment, the result will be lower price and shorter delivery. Obviously, if a catalog item is ordered, this results in quicker delivery again. This can be summed up as the most cost effective procurement.

Handling

This section can be broken down into three areas:

1. Receiving
2. Calibration
3. Installation and Use

Receiving

The transducer is packaged using special methods devised to eliminate damage both in transit and during receiving. Normal packaging procedures were found lacking. The special packing was designed to allow a resistance check of the transducer to be made before unpacking.

Calibration - Steady State and Thermal

During calibration, fixtures should be employed which are identical, both from the standpoint of physical configuration and material to those in which the transducer will be installed during use. Situations can easily arise where transducers are tested against a

procurement specification which is inconsistent with the end use. This situation can be alleviated by specifications which are written to reflect use requirements.

Calibration - Dynamic

Dynamic calibration is usually performed by either shock tube methods or sinusoidal pressure generators either of the sweep or point-by-point type.

Step Pressure Calibration - Shock Tube Methods

A substantial amount of work has been done on shock tube theory and practice. However, some uses of shock tubes can give rise to erroneous calibration data. An item of major importance is to ensure that the transducer is mounted in such a manner as to isolate it from case compressive loads caused by shock tube firing. A recently published report, Reference 1, cautions against the indiscriminate use of tubing with a transducer installed some distance from the sensing orifice.

Frequency Response Calibration

One of the main reasons for the development of the miniature semiconductor transducer was the need to measure turbulent airflow in small models. The range of interest of the frequency content of the data was up to 100 kHz but predominantly dc-20kHz Consequently, several approaches to the problem of frequency response calibration were taken.

1. The Whistle

   The development of a "whistle" type calibrator is fully covered in Reference 2. This calibrator has been successfully used for frequency response calibration but is a point-by-point system.

2. Sinusoidal Calibrator - Infinite Tube Type

This approach is based on the measurement system employed by G. E. Aircraft Engine Division. The theory of operation is described in References 3 and 4. This method offers advantages of controlled sweep rate and phase angle measurement. Due to its flexibility the system is ideally suited for experimental work. Amplitudes of up to 1 psi Rms (171 dba) are attainable. Frequencies of 20 Hz to 20 kHz have been achieved.

3. Sinusoidal Calibrator - Siren Type

The development of a siren type (rotating orifice disc) calibrator has been the subject of considerable research by Battelle Memorial Institute. Refinements were continued until budgeting restrictions precluded further work. It was decided during the SST Development Program that a calibration system which also included the capability of a temperature range of $-65^{\circ}F$ to $+600^{\circ}F$ was needed. The siren type was selected for this task and funded from Boeing internal funds. Performance characteristics have been evaluated and presented by Boeing Company personnel, Reference 5. This device has the advantage of high peak-to-peak pressures in addition to its temperature capability.

4. Sinusoidal Calibrator - Fluidic Oscillation Type

This device employs fluidic oscillators to generate desired frequencies. This approach allows the attainment of the highest frequencies and has been made commercially available. The technical considerations are documented in Reference 6.

Mounting

The question of mounting is always soft vs. hard mount. Soft mounting is generally used to isolate the transducer from vibration and is usually done by using a material such as RTV in copious quantities.

The obvious plus factor for the use of RTV is in some instances that the transducer can be removed and used in other test articles. This is not always the case as RTV is difficult to dissolve in some installations.

Hard mounting is generally performed using either epoxy or a mechanical clamping method.

Due to the insensitivity of the diffused diaphragm transducer to vibration and shock, the majority of applications utilize the hard mount, either by epoxy or mechanical clamping.

Some mounting methods, particularly where small cross-section is required, have used an .080" diameter transducer probe with a rubber O-ring to act as a seal. This type of installation is used in some water cooled probes. Where there is a close tolerance between the probe and its housing, the components must be extremely clean and if a lubricant is used, it must be of a type which does not decompose into a solid and affect clearances. For these types of fit, close tolerance tubing should be used rather than commercial grade.

Tubing Systems

The occasion arises when a tube is used to sense the pressure and the transducer is mounted some distance from the pressure port. Particular attention must be paid to the end of the tube at the

sensing point to ensure that the lip and general geometry comply with the aerodynamic requirements. Blunt lips are usually unsatisfactory but specific criteria are well defined in aerodynamic textbooks.

If the tube requires bending, great care must be exercised to ensure that the internal surfaces are smooth and do not have any "kinks" on the inside of the bend. These surface irregularities cause reflected waves which result in unsatisfactory frequency response and invalid data if not discovered. Other types of discontinuities such as voids and cavities can also cause irregular calibration results.

Protection

One of the major problems encountered during the last few years has been the protection of transducers from debris and heat while still maintaining high frequency response.

Protection Against Damage from Debris

Consider one of the main applications of the semiconductor transducer; namely, intake/engine testing in wind tunnels and test stands. All wind tunnels have airstreams which are debris laden to some degree. It was found, the hard way, that free stream mounted transducers, either with silicon or metal diaphragms, were damaged and/or eroded away. Large particles shattered silicon diaphragms and destroyed internal elements of steel diaphragm transducers. Small particles eroded away metal diaphragms and silicon diaphragms, in that order. Various protective devices were developed, Reference

One method known as the "B" type screen (patent pending) is to use a baffle with either a series of peripheral holes or slots which

direct the particles onto the machine or supported area of the diaphragm, where their energy is absorbed.

The other alternative is to use a perforated screen. This is particularly effective in areas of low particle density, where small particles only are present.

In both cases a light (.001" - .003") coating of RTV has proven advantageous in some wind tunnel applications.

Protection from Thermal Shocks

The "B" type screen has also been used successfully as a heat shield. The location of the holes eliminates direct impingement of heat onto the active portion of the diaphragm, resulting in either insensitivity to thermal shock, or at least delay in the effect if the heat is severe.

The time honored method of using ablative coatings for heat resistance is also successful with this class of transducers.

Conclusion

Experiences with silicon semiconductor and semiconductor gaged transducers over the last six years have proved several points. In summary these are:

1. The small size attainable by microcircuit techniques allows the sensor to be mounted where the data is.
2. The silicon diaphragm is not more fragile than its metal diaphragm counterpart if handled correctly.
3. The semiconductor approach yields significantly higher output.
4. The natural frequency of the silicon diaphragm transducer compared to the metal diaphragm transducer for the same size is higher by at least a factor of 5.

5. For the measurement of high frequency phenomena, the smaller the active diaphragm diameter, the better.

Reference

The overall conclusion is that the semiconductor transducer has been developed to a level where in many respects it is superior to other types of transducers and in many applications it is the only device which would do the job.

References

1. "The Dynamic Effects of a Pressure Transducer due to Recessing," Lawrence Livermore Laboratory, authored by Mr. William M. Shay, Report UCRL-51156.

2. "System for Testing Pressure Probes Using a Simple Sinusoidal Pressure Generator," NASA Tech Note TMX-1981, authored by Ted W. Nylund, David R. Englund, Jr., and Vernon D. Gebben.

3. "Development and Application of Ultra-Miniature Pressure Transducers for Use in Wind Tunnel Models," authored by Dr. A. D. Kurtz, Kulite, and J. C. Kicks, Boeing Company, presented at 15th Aerospace Symposium (ISA) Las Vegas, Nevada, May 1969.

4. "A Calibration Facility for Transient Pressure Probes," North American Aviation, Los Angeles, authored by Mr. Richard P. Hoeflinger, presented at 33rd Semi-Annual Meeting of the Supersonic Tunnel Association, El Segundo, California, May 1970.

5. "Development of a Primary Standard for Dynamic Pressure," authored by G. W. Cohrs and D. W. Patterson, The Boeing Company, presented at Tutorial Sessions, 16th Aerospace Symposium (ISA) Seattle, Washington, May 1970.

6. "Dynamic Calibration of Pressure Measuring Systems," McDonnell Aircraft Company, authored by Mr. James P. Simpson and Mr. William L. Gatley, presented at 16th Aerospace Symposium (ISA) Seattle, Washington, May 1970.

INTEGRAL SILICON TRANSDUCER MOUNTING EXPERIENCE

E.D. ORTH & P. CANNON

GENERAL ELECTRIC COMPANY

PROCESS AUTOMATION BUSINESS DIVISION

Introduction

Demands for performance, lightweight, temperature insensitivity and reliability are required by transducer applications. Innovation of device mounting processes, such as the Pomerantz-Wallis anodic bonding techniques developed by P.R. Mallory Co.[1] suggests that new approaches to device design, mounting and packaging may be timely. Innovation is needed in low hysteresis, pressure sensitive, instrument type, transducers for use in severe environments, including -40° to +100°C. Our philosophy is one of parts/1000 or less for such instrument perameters as hysteresis linearity and temperature stability. Our general thrust has been the innovation and development of an integral silicon transducer. We report progress in the development of pressure sensors within this thrust, especially with respect to anodic bonding.

Experimental Procedures

We have worked with four general types of primary mount: sandwich, sandwich with release agent, tube support and tube support with cavity (Fig. 1). The bonding systems studied include epoxy cement and the anodic process in glass-silicon systems. Most of our results, which were somewhat similar for all 4 structures, have involved the anodic bonding process. The devices used have been "Integral Silicon Transducers" similar to what is shown in Fig. 2.[2]

Experimental tests have been on the transducer as a fluid pressure sensor. A manifold holding twelve transducers was pressure loaded by a pneumatic Mansfield-Green/Ametek dead weight secondary standard (model HK-500). The test manifold was immersed in a temperature programmable environment (Blue M Electric Co. model #1004-3C) and was electronically scanned through a Vidar 5402 digital data acquisition system ("D-DAS") to a recording DVM with six figure resolution (part of the VIDAR DAS). The DAS punched paper tape output was run through shared time computer data reduction programs. The sensitivity of measurement ($\pm$.1 uV) was such that the thermal excursion of pressure following ($\bar{a}$diabatic) step loading of the dead weight tester was normally seen. For pressures over 1000 psi an oil-filled dead weight tester (Mansfield Green/Ametek Model R-100) was used.

Epoxy mount samples were prepared in structure type 1, using Invar as a support. Results using Yerman (Fig. 2) high output IST's were typically:

Zero Shift with Temperature	"Span" Output Shift with Temperature	Compensated "Span" Output, MV/V	Compensated Zero Pressure Output MV/V
%/100°F	%/100°F		
1.6	.24	12.7	13.5

Note that "span" output is basically the same quantity as full scale output, physically, but is reported as a quantity normalized to an applied zero, rather than to the natural zero of the transducer.

These output and temperature shift values promise very high performance, provided a primary mount system could be found which was mechanically stable and could reduce temperature effects. Our interest in superior stability led us to use the anodic system of mounting. We proceeded, using a horizontal tube furnace (fig. 3) and a gravity loaded contact electrode as indicated. Consistent results were obtained when glass and silicon surface finishes were clean and polished.

A typical sample preparation was as follows:

Step 1 - Tube with flat on one end, and optically flat silicon device
2 - Clean parts
3 - Probe diaphragm
4 - Wire bond
5 - Install parts in holding fixtures
6 - Alignment
7 - Anodic Bond
8 - External connection system.

A salient challenge is to limit the bond so that the active area of the transducer is precisely defined. This can most easily be done by mounting over a tube or cavity and a premium is thus placed on the use of gage patterns which minimize the effects of nonregistration on performance.

Data for typical anodically bonded transducers are compared with results for epoxy bonding below.

General Comparison - Anodic & Epoxy Bonding

	Zero Shift with Temperature	"Span" Output Shift with Temperature	Compensated "Span" Output	Compensated Zero Pressure Output
	%/100°F	%/100°F	MV/V	MV/V
Anodic Bond	-.098(+212°F) -.14 (-40°F) W/C	-.18 (900 psi) -.20 W/C	12.9	.42
	+.52 (+212°F) -.73 (-40°F) N/C	+.09 (40 psi) +.08 W/C		
Epoxy	+.78	±.12 (300 psi)	12.7	13.5

N/C = no compensator W/C = with compensator

Hysteresis of Epoxy and Anodically Bonded Transducers

(% Full Scale Output)

Epoxy mount on invar	.1 (300 psi)
IST's anodically bonded to glass tubes	$\bar{X}$ = 0.022 σ = 0.030
"window frame" IST on a 7740 pyrex cantilever anodically bonded.	.64 one of one 200 gm load

The data showed some sensitivity to gage pattern, and in an extreme test, an integral "window frame" gage pattern (after Fenner)[3] allowed direct measurement of the creep of the glass support. The test configuration was a little different (Fig. 4) but the results show clearly the mounting system is not so critical a limit on observed hysteresis as is poor choice of transducer pattern and mount design. In general, hysteresis can be expected to scale with the range of pressure applied, and our data do show such a correlation.

Another important indicator for early screening of a pattern and mounting system is behavior under extended static and cyclic load. Experience with 4 samples subjected to long term static load (1000 psi for 1000 hrs.) and 6 samples subjected to cyclical loading (10^5 cycles in 500 hrs.) has been no bond failures. During the course of our program we have bonded approximately 200 diaphragms to 7740 pyrex glass tubes. The yield of successful bonds has been in excess of 95%.
We have found that simple tools and easily made alignment and holding fixtures can be used. The low temperatures involved by the process compared with those used in usual glass sealing procedures does much to simplify transducer assembly.

Summarizing the data show that a tube-mounted IST, mounted using the anodic bond, can give a simple measurement device having unusually good characteristics, especially as concerns hysteresis, sensitivity and temperature compensation characteristics. Secondary mount design further allows an unusually wide range of measurement application. It has become apparent to us that this bonding system removes the uncertainties which we have been used to in strain gage epoxy bonding, leaving the classical question of gage and external shroud design more clearly accessible than ever before.

Bibliography

1. Anodic Bonding - Daniel I. Pomerantz
   U.S. Patent No. 3,397,278 assigned to P.R. Mallory and Co., Inc., Indianapolis, Ind.

2. Silicon Diaphragm with Optimized Integral Strain Gages - A.J. Yerman
   U.S. Patent No. 3,537,319 Nov. 3, 1970
   Assigned to General Electric Co.

3. Strain sensitive apparatus and elements therefore - Gunther E Fenner
   U.S. Patent No. 3,251,222 assigned to General Electric Co.

March 31, 1972

GENERAL STRUCTURES

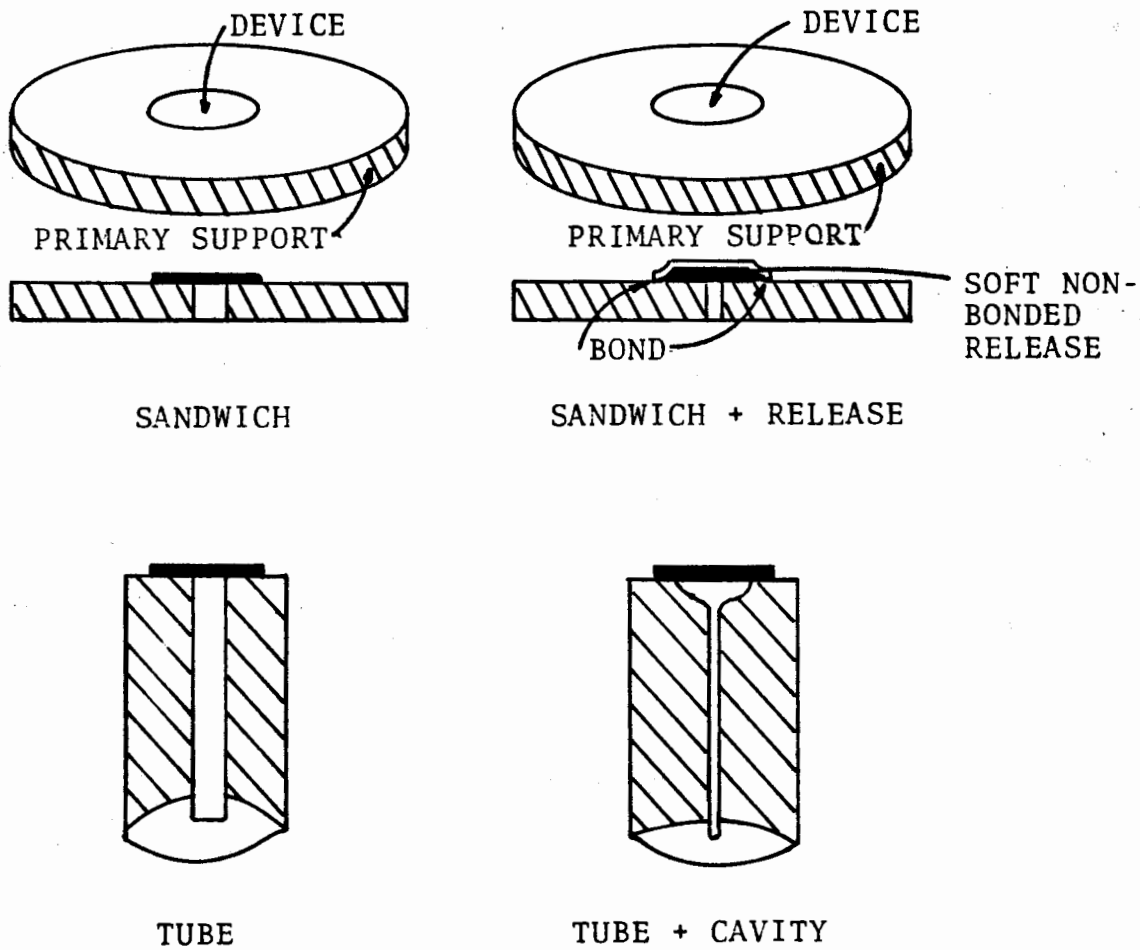

FIG. 1

STRAIN GAGE CONFIGURATION

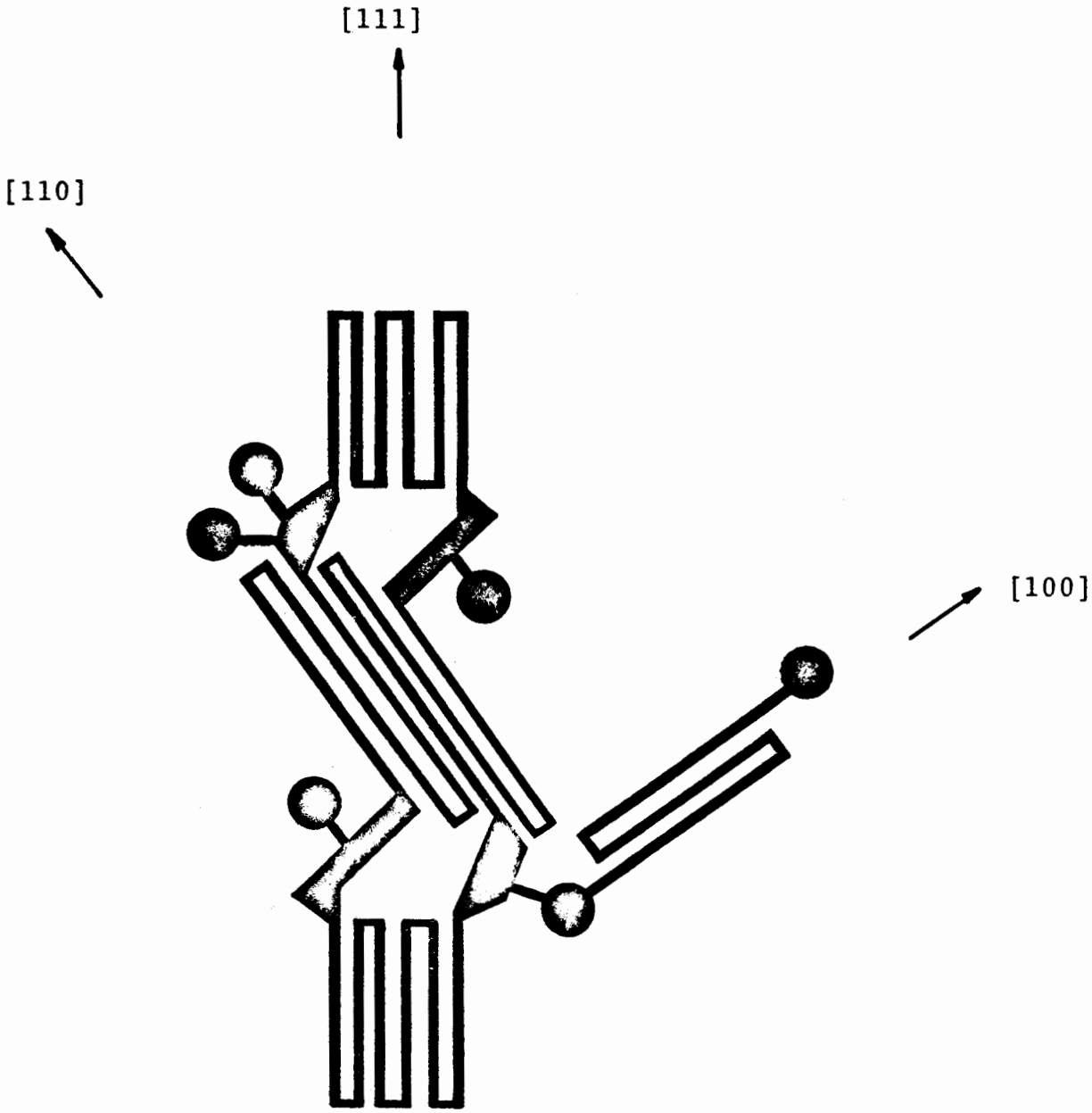

FIG. 2

PRIMARY BOND - PRESSURE FIXTURE

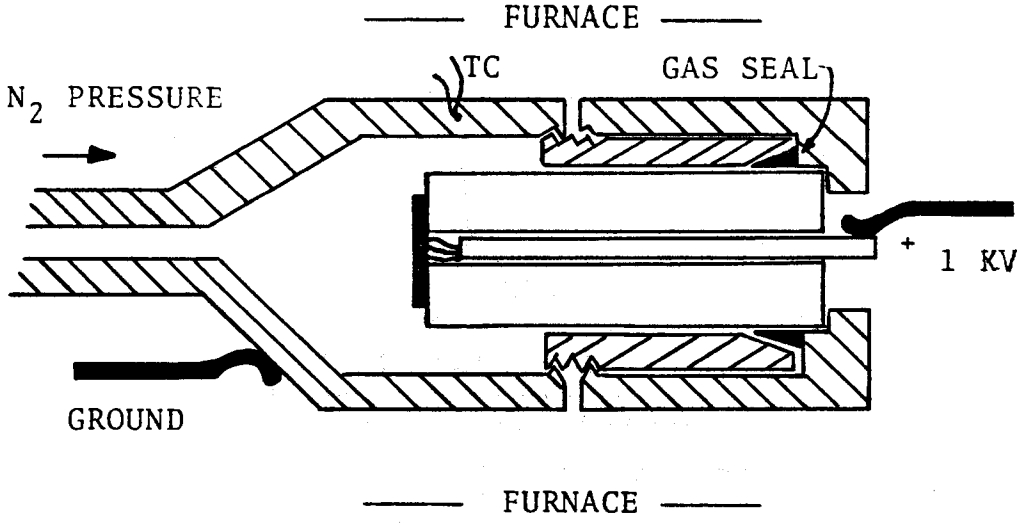

FIG. 3

WINDOW-FRAME CANTILEVER

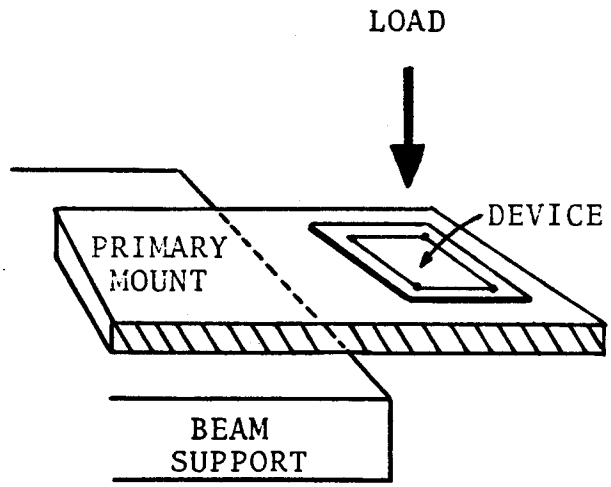

FIG. 4

ELECTRIC FIELD ASSISTED BONDING

George Wallis

P. R. Mallory & Co. Inc.
Laboratory For Physical Science
Northwest Industrial Park
Burlington, Massachusetts 01803

Some four years ago, we announced a new glass sealing technique[1] which was felt to be unique in several important respects. (1) The surfaces remained solid during the sealing process; (2) no foreign materials such as adhesives or fluxes or solvents were utilized; (3) the seals were made at relatively low temperatures. Some resulting advantageous features of the seal become immediately obvious: since the glass remains solid during sealing, no macro-distortion will take place; if the glass acts as a structural member extremely close dimensional tolerances can be realized; if the glass has an optical function, an ability to make distortionless seals is of particular importance; in vacuum and in device applications it is a desirable feature that seals can be made without the use of fluxes or solvents which might give trouble as contaminants; the low sealing temperature broadens the area of application to devices whose characteristics deteriorate at higher temperatures. Thus, the new glass sealing technique appears to have broad applications in optics and electron optics, in vacuum technology and in the encapsulation and mounting of electronic components in general, and of electronic strain gauges in particular.

The general features of the sealing method will be described using as an example a seal of an iron-nickel-cobalt alloy such as Kovar to a matching glass such as Corning #7052 or #7056[2]. The faces that are to be sealed are

first lapped and polished so that they are both, flat and smooth. After a thorough clean-up they are placed on top of each other and heated to a temperature that is typically in the range 400°C to 550°C. A DC voltage of about 1000V is then applied between the alloy and the glass such that the glass is at a negative potential with respect to the alloy. If this voltage is maintained for more than a few seconds one finds that the glass and the alloy form a strong hermetic bond.

One of the important process parameters is temperature. In general the annealing temperature of the glass is a good choice. In some special cases much lower bonding temperatures are practical. For instance the annealing temperature of Corning #7052 glass is 480°C, yet good Kovar-#7052 seals have been made at 350°C. Similarly, though the annealing point of pyrex #7740 is 565°C, seals of pyrex to silicon are feasible at a temperature as low as 300°C.

The voltage is generally in the range 50 to 1000 volts with the optimum value depending on the temperature and the geometry. If the voltage is applied after the parts have reached a steady temperature, a plot of current versus time resembles the charging curve of a capacitor, i.e. a relatively large initial current decays more or less exponentially with time. In some applications it is preferable to apply the voltage at a low temperature and maintain it while the parts heat up and dwell at the bonding temperature.

A sealing time of one to five minutes is typical. In general, a longer

time is required if the sealing temperature and voltage are relatively low.

The surface conditions of the parts are most important. Unless the parts mate very closely and are quite smooth, they will not form strong hermetic bonds. Most of our sealing has been done with surfaces having a finish of about 1 μ in. RMS. Under these conditions no preoxidation of the metal surfaces is required, but usually a very thin oxide layer forms during the sealing operation. In the case of preoxidized Kovar good seals have been found feasible to surfaces that had a roughness of up to 6 μ in.

A convenient criterion for the preferred surface mating and surface smoothness is that, when the glass is placed on the metal, the parts should be sufficiently close so as to give rise to interference fringes. Furthermore, with the glass lightly pushed against the metal, no more than 4 or 5 interference fringes should be visible over a linear distance of 1 in.

As in conventional glass-metal sealing, it is generally advantageous to select glass and metal parts with closely matching coefficients of thermal expansion. However, when the parts are in the form of thin foils or films, seals to non-matching materials are feasible.

For obvious reasons, most of our work has been done in room air. No attempt has been made to control the humidity. However, some systems have also been sealed in oxygen, steam, nitrogen, hydrogen, argon and in vacuum.

The process works for a large number of glass-metal systems. A partial list of materials is shown in Table 1.

A discussion of the mechanisms that promote low temperature sealing is beyond the scope of this talk[3]. Essentially, the application of a voltage produces a very high electric field at the glass-metal interface which (a) provides an electrostatic force which pulls the surfaces that are to be sealed into intimate physical contact, and (b) facilitates the transfer of ions from the metal into the glass and vice versa. For this reason the technique has been named "Field-Assisted Glass Sealing".

So far the discussion has been limited to glass-metal sealing which has been studied most extensively. More recently it has been found that field-assisted glass sealing also has applications in the sealing of glass to glass and in the bonding of semiconductor to semiconductor. Several glasses were found that were sealable at unusually low temperatures when a voltage was applied. Other glass to glass seals were made by first coating one of the glasses with a metallic film (e.g. aluminum) and sealing the uncoated to the coated surface.

Bonds of silicon to silicon have been made by two methods. In our laboratory we provided the silicon faces with fairly thick films of thermal oxide and then used an electric field to bond the two oxide films to each other, thus producing a sandwich of silicon-silicon dioxide-silicon[4]. At the Research Triangle Institute, Brooks, Donovan and Hardesty[5] coated one of the silicon surfaces with a glass layer to which they bonded the second silicon surface. Their method undoubtedly is applicable to other semiconductors and metals.

Shortly after the sealing technique was publicly described, its possible application to the mounting of strain gauges was proposed. In one approach it was suggested that it might be practical to use a thin glass layer as the "cement" that bonds a silicon strain gauge to a metallic structure. Like the glass frit that is utilized for mounting purposes by some groups, a layer of solid glass "cement" would be far superior to more traditional adhesives such as the various epoxies in that mechanical creep would be greatly reduced and the temperature capabilities of the bond would be significantly increased. A solid glass layer might be preferable to a glass frit in several ways.

1) At a relatively low bonding temperature, say around 300°C to 350°C, a layer of glass frit usually fails to match the silicon with regard to thermal expansion. By contrast, field-assisted sealing would permit the selection of glasses that match silicon extremely closely.

2) Jigging and fixturing would be easier, and alignment more accurate, if no liquid phase is present.

3) Provided the surfaces are smooth and clean, very uniform and reliable bonds, free of bubbles, are obtainable by the field assisted technique.

Preliminary experiments in our laboratory indicated that it was indeed feasible by means of our method to seal silicon strain gauges to metallic members by way of a thin solid glass layer. Good results were obtained provided the three materials—silicon, glass, and substrate—had closely matched

coefficients of thermal expansion. The same approach could probably be applied also to metallic foil gauges.

In another approach, the glass itself is the structural member to which the strain gauge is bonded. This approach has been thoroughly explored by Cannon and Orth of GE who will describe their very ingenious work in the next talk[6].

In a third approach, the silicon strain gauge is attached to a silicon structural member. This is a favored configuration for precision work since it eliminates any differences in thermal expansion between gauge and support. Two options would seem to be of interest. In one, the method described in ref. 4 could be used to bond the gauge to the silicon support through an intermediate layer of silicon dioxide. The resulting structure should have a very large range of operating temperature.

A different approach was taken by the group from the Research Triangle Institute (ref. 5) who used a sputtered glass layer as the intermediary between the silicon gauge and the silicon support. Because glass softens at much lower temperature than oxide, their structure presumably has a more narrow range of operating temperature. Yet within this range it may have superior characteristics because unlike the oxide layer the glass film should have almost the same thermal expansion characteristics as the silicon.

I. Insulators

A. Glasses: Borosilicate, aluminosilicate, sodalime, fiberoptics, chemcor tempered glass, fused quartz

B. Ceramics: CerVIT, porcelain, glazed alumina

II. Conductors

A. Metals in Bulk: Ta, Ti, Be, Mo, Co-Ni-Fe

B. Semiconductors: Si, Ge, GaAs

C. Metals as Films or Foils: Al, Ni, Cr, B

TABLE 1. Materials that have been sealed by the field assisted procedure.

REFERENCES

1. D. I. Pomerantz, U. S. Patent 3,397,278.

   George Wallis and D. I. Pomerantz, J. Appl. Phys., 40,3946(1969).

   George Wallis, SAE J. of Automotive Engineers, p. 15, Feb. 1971.

2. Seals to Fe-Ni-Co alloys are described in G. Wallis, J. Dorsey, and J. Beckett, Am. Ceram. Soc. Bulletin 50, 958(1971).

3. For details see George Wallis, J. Am. Ceram. Soc. 53, 563(1970).

4. George Wallis, J. Electrochem. Soc. 117, 405C(1970).

5. A. D. Brooks, R. P. Donovan and C. A. Hardesty, To be published in J. of Electrochem. Soc.

6. E. D. Orth and P. Cannon, This conference.

A SEMI CONDUCTOR STRAIN GAGE MOMENT DETECTOR TRANSDUCER

BY HERMAN ERICHSEN
TYCO INSTRUMENT DIVISION
WATERTOWN, MASSACHUSETTS 02172

ABSTRACT:

A new semi-conductor strain gage moment detector transducer has been developed. This transducer is the "Key Component" of a unique Electronic Moment weight scale utilized for turbine blade balancing. This system takes into account both the weight and the C.G. of the blade so dynamic balance, in end use, can be predicted with a rapid static test.

The transducer is unique in that the design characteristics were "peaked" to the requirements of the system and the end application instead of building a system about an available general purpose transducer.

INTRODUCTION:

The moment-detector transducer described was designed for one specific application. That application is; the moment-weighing of jet engine fan, turbine, and compressor blades at their "in use" mounting radius.

Moment-weight measurements of these blades have become increasingly important. Dynamic balancing requirements for the fan, turbine and compressor wheels were becoming more and more critical as size and r.p.m. were increased. A device for measuring the moment weight of the blade at its "running" radius would simplify the dynamic balancing process and the measurement could be made statically.

The measurement, however, is extremely difficult to make. Blades having a moment weight of 3600 to 4000 0z in, at their running radius, have to be measured to an accuracy of ±0.1 0z in. A number of devices had been in use. The most accurate being an analytical balance device to measure the mass and a second instrument for measuring the CG. of the blade. The devices used, however, were slow, had to be operated in a laboratory environment and required calculations to determine moment weight at the running radius. A number of transducer based systems were also tried using standard or available load cells, reaction torgue meters, C.G meters

etc. None of these systems were adequate. For this reason it was decided to develop a transducer system for this specific application.

THEORY OF MOMENT-WEIGHT BALANCING:

Fig. 1 represents a fan or compressor wheel of radius (r) with blades, M1 and M2, mounted on it. The distances of the center of gravity of these blades from the rim of the wheel are represented by d, and d_2. The condition for the wheel to be in dynamic balance (in the plane of the wheel) is:

$$M_1 \omega^2 (d_1 + r) = M_2 \omega^2 (d_1 + r)$$

Where ω is the angular velocity of the wheel.

Thus if two blades weigh the same ($M_1 = M_2$) the wheel is in dynamic balance if di = d_2. However if the moment weight of the blade about its "running" radius is measured, it actually establishes a number for the quantity M_n (d_n + r). Thus two blades having the same value for Mn (d_n + r) will be in dynamic balance on a wheel having the same mounting radius as that at which the blade was measured.

SYSTEM CONCEPT:

The system contemplated for use is shown schematically in Fig. 2. The electronic read out, standard weights and mounting fixtures are of course relatively straight forward problems. The gating component in the system is the transducer.

Previous experience indicated that a moment or torque (reaction type) transducer showed the most promise. However, a device that would read the moment weight directly to the required accuracy. (± .0025%) was not feasible. The transducer would have the approximate the requirements of an analytical beam balance. That is the moment weight of the blade would be partially counter balanced standard weights and the transducer would read the difference between the standard and the unkown (blade) moment.

The design characterstics established for the transducer beyond the fact that it would be a strain gage device were.

1. Measuring Range	± 50 Oz in
2. Accuracy	± .1 Oz in
3. Temp. Range	80°F ± 30°F
4. Overload Range	± 5000 Oz in

5. Operate within the specifications in the load and force conditions shown in Fig. 2.
6. Balancing Time: 5 seconds
7. Rotation at full load ±50- oz in : <± 1.0°
8. Fixturing-for different blades-blade running radius. Standard weights and blade holders must be easily set up, ie the end system must be versatile.

TRANSDUCER DESIGN:

The transducer designed for this application is shown in Fig.4. The floating head Part 1 is the interface, (input) point between the transducer and the blade and fixture assembly. It is connected to the mounting base (2,) by an elastic support (3). In addition a sensor or strain sensing element is attached between the base (2) and the floating head. These are the "Key" components in the transducer. In operation an input moment M. to this floating head, will cause the support beam to bend according to the laws of elasticity and the head will rotate an angle θ with respect to the base such that:

$$\theta = \frac{M_3 \ell_3}{E I_3}$$

$$I_3 = \frac{b_3 h_3^3}{12} \quad \text{SEE FIG. 4B}$$

M = MOMENT APPLIED

E = MODULUS OF ELASTICITY

Since the input is a pure moment, the support beam will deflect with a constant radius of curvature. Therefore, the head rotates around the halfway point of the support element. This is the point at which the sensing element passes through the support beam. The sensing element also being attached between the floating head and the base will bend to match the slope between head and base ie: angle θ.

The sensing element is centered in the axis of rotation, therefore, only a pure moment is necessary to satisfy the end conditions.

The fact that the sensing element is subjected to a "pure" bending moment implies that the least amount of strain energy is required to satisfy its end conditions.

The support beam is much larger and stiffer than the sensing element. Therefore when an input moment M is applied to the system a large percentage of it(M_3)is absorbed by the support element. The elastic constants of the support beam, b_3 h_3 L_3 an E_3 are shown in Fig. 4B thus:

$$M_3 = \frac{\theta E_3 I_3}{\ell_3} = \frac{\theta E_3 b_3 h_3^3}{12 \ell_3}$$

and the stress in the beam is:

$$S_3 = \frac{6 M_3 h_3^2}{b_3}$$

Similarly for the sensing element whose elastic constants are b_4 h_4 L_4 and E_4 as shown in Fig. 4C.

Thus:

$$M_4 = \frac{\theta E_4 I_4}{\ell_4} = \frac{\theta E_4 b_4 h_4^3}{12 \ell_4}$$

and the stress in the sensing element:

$$S_4 = \frac{6 M_4 h_4^2}{b_4}$$

The elastic constants for the two elements are selected to achieve the following characterstics:

1. $M_3 >> M_4$ Note: $M_3 + M_4 = M$ the input moment.
2. The stress in the support element due to moment (M_3) is small
3. The cross sectional area of the support element $b_3 \times h_3$ is as large as possible to mimimize the axial stress on 3 produced by the vertical load F_v (See Fig. 2.)
   (This is the real "Key" to the successful operation of the unit)

When these conditions are met, and optimized, the sensing element (4) acts as an angular extensometer its curvature being much greater then that of the support element since L_4 is much shorter then L_3. Yet the moment it absorbs (M_4) is much less than M_3 because $<<b_4\ h_4\ ^3<<b_3\ h_3$. While the stress/strain produced determines the output of the strain gages applied to the sensing element.

Semi-conductor strain gages were chosen for this application. Their small size permitted the sensing element elastic constants b_4, h_4, L_4 to be made extremely small. This allowed greater design latitude in selection of relative elastic parameters between the support member and the sensing element.

In the completed design two extra flexures were added, between the head and the base as shown in Fig. 5. These were to protect the unit from forces and torques, perpendicular to the sensing plane, that could be incurred during mounting of the blade, or accidentally. In addition the device was provided with internal stops, as shown in Fig. 5 to meet the requirements of overload protection.

As the design/development progressed it became obvious that the transducer would have to be damped to achieve the required balancing time of 5 seconds. Using dash pots externally, in the fixturing, would have severely limited the desired versatility of the blade balancing system. Therefore it was decided that the damping should be an integral part of the transducer.

The size and construction of moment detector plus the high polar moments of inertia we were faced with did not allow us to use the normal damping techniques-(dash pots, magnetic etc.) The

damping system finally devised is shown in Fig. 6. A & B are bellows which are fastened between the floating head and the base (2) so that an angular displacement of the head will cause a compression in one bellows and an extension in the other. They are located symetrically with respect to the center line of the support element. This allows the bellows to rotate about their half length minimizing the moment they absorb. The bellows are connected hydraulically through the oil passage D. The entire bellows system is completely filled with silicone oil. For the head to rotate an angle θ Fig. 6 oil must flow from bellows A to B through the passage D. According to Poiseuille the difference in pressure ΔP across an oil passage of length L is:

$$\Delta P = \frac{32 \eta \ell}{d^2} \dot{x}$$

Where η = the viscosity of the oil

d = the diameter of the tube

$\dot{x}$ = velocity of the oil

For an angular velocity the velocity at which the bellows (A & B) will be displaced is given by rθ (where r is the distance of the bellows from the center of rotation)

The velocity ($\dot{x}$) of the oil thru the passage (D) is:

$$\dot{x} = r\theta \frac{D_A^2}{D_D}$$

D_A = Effective diameter of the bellows

D_D = Diameter of the passage

Therefore, from Poiseuilles equation, for the system:

$$\Delta P = \frac{32 \eta \ell D_A^2}{D_D^4} r\theta$$

The moment M_r required to produce ΔP is

$$M_r = \frac{\Delta P \pi D_A^2}{4} = \frac{8\pi \eta \ell D_A^4}{D_D^4} r\theta$$

The moment (M_r) is then proportional to the angular velocity $\theta$the prerequisite for true viscous damping. Of course this only holds for laminar flow. The damping coefficient R. for the system is then:

$$R = \frac{8\pi D \ell D_A^4 r}{D_D^4}$$

The damping coefficient shown relates to the equation of motion of an angular system.

ie:

$$M = J\ddot{\theta} + R\dot{\theta} + K\theta$$

Where M = input moment
J = Polar moment of inertia
K = Angular Spring Constant

The damping coefficient R. is tailored to the damping requirement of the transducer by varying the diameter of tube (D_D) diameter of bellows A & B and the viscosity of the oil. In its final form these parameters were chosen so that the transducer was over damped when lightly loaded and underdamped when operating fully loaded. This set up allowed us to meet the 5 second balancing time through out the operating range.

The third bellows, shown (C),is used to permit expansion of this oil with an increase in temperature. Since this is a closed system, oil expansion would result in large vertical forces acting between the base and the head. The third bellows relieves these forces. The oil passage to this bellows is extremly small in diameter relative to the diameter of D. It therefore appears as a blocked passage to the high velocity flow, of oil, associated

with the damping function. For this reason while it effectively allows for expansion of the oil due to normally slow temperature change it has a negligible effect on the damping function.

CONCLUSION:

The moment-detector developed specifically for this application had to meet a number of requirements standard or general purpose transducers could not. In effect the end system required a transducer having characteristics similar to a beam balance. Yet it had to be rugged, versatile and easy to operate, Ruggedness versatility and ease of operation are usually inherent in any good transducer. A general purpose transducer is usually a series of trade off's on characteristics. Standard or available moment transducers in the ± 50 oz in range could not support the vertical force required, nor did they include integral damping. However by "peaking" the moment detector transducer for high vertical force capability and including damping, at the expense of size and stiffness a transducer was manufactured that meets the requirements. This transducer the model DQA is the key to a line of blade balancers now in use by Pratt & Whitney Aircraft as a production tool on the JT engine and as a repair shop tool by most of the airlines.

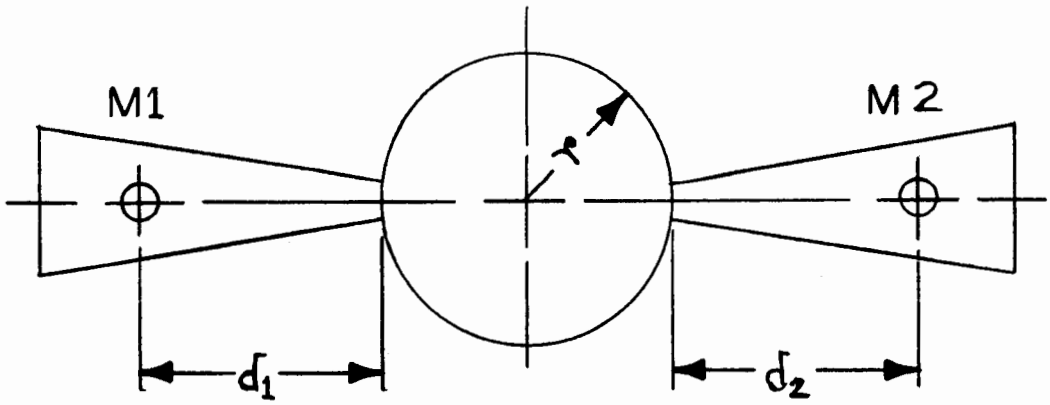

FIG.1

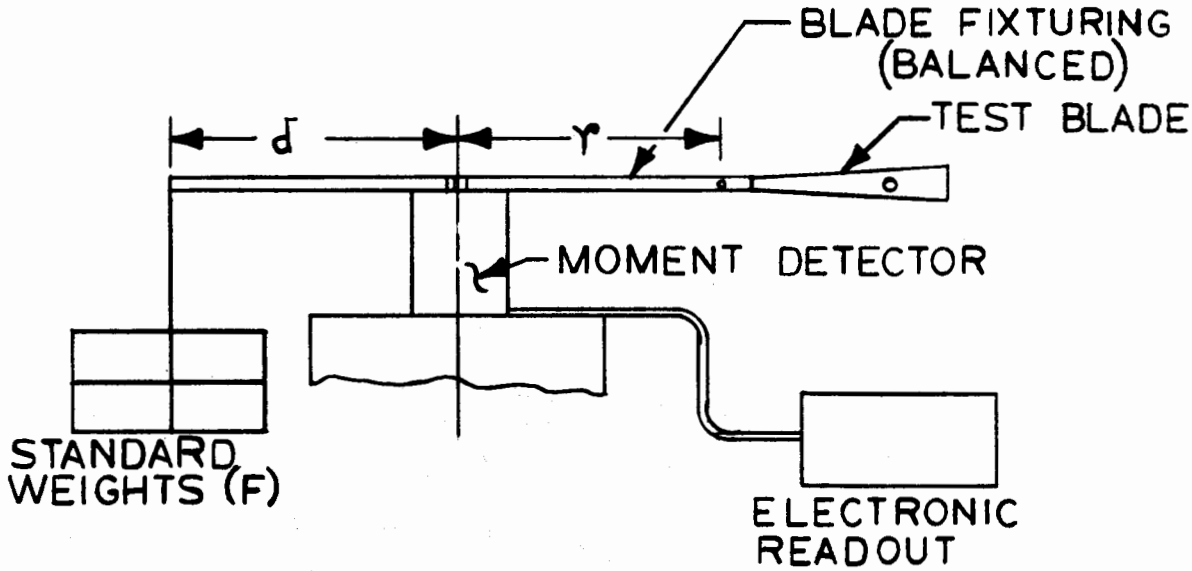

NOTE: BLADE MOMENT WEIGHT = F X D + READOUT

FIG. 2

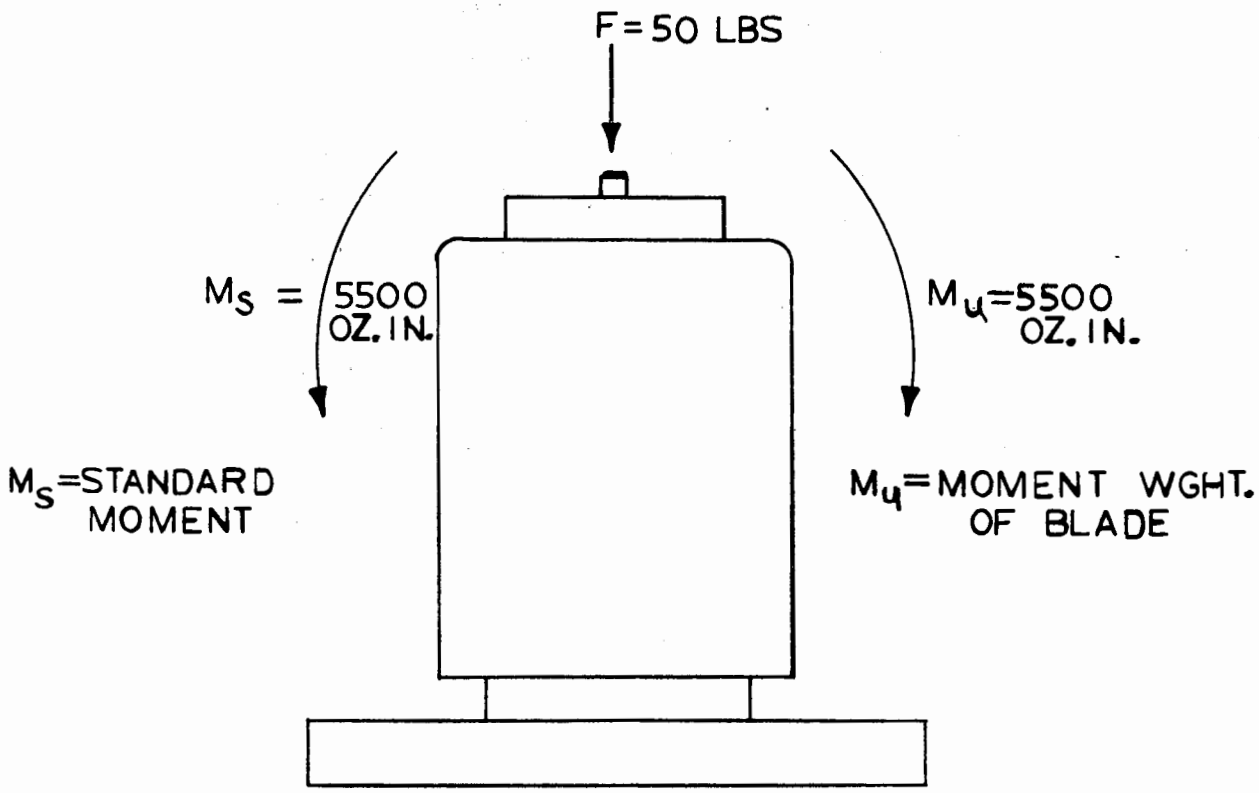
F = 50 LBS
M_S = 5500 OZ. IN.
M_u=5500 OZ. IN.
M_S=STANDARD MOMENT
M_u= MOMENT WGHT. OF BLADE

FIG. 3

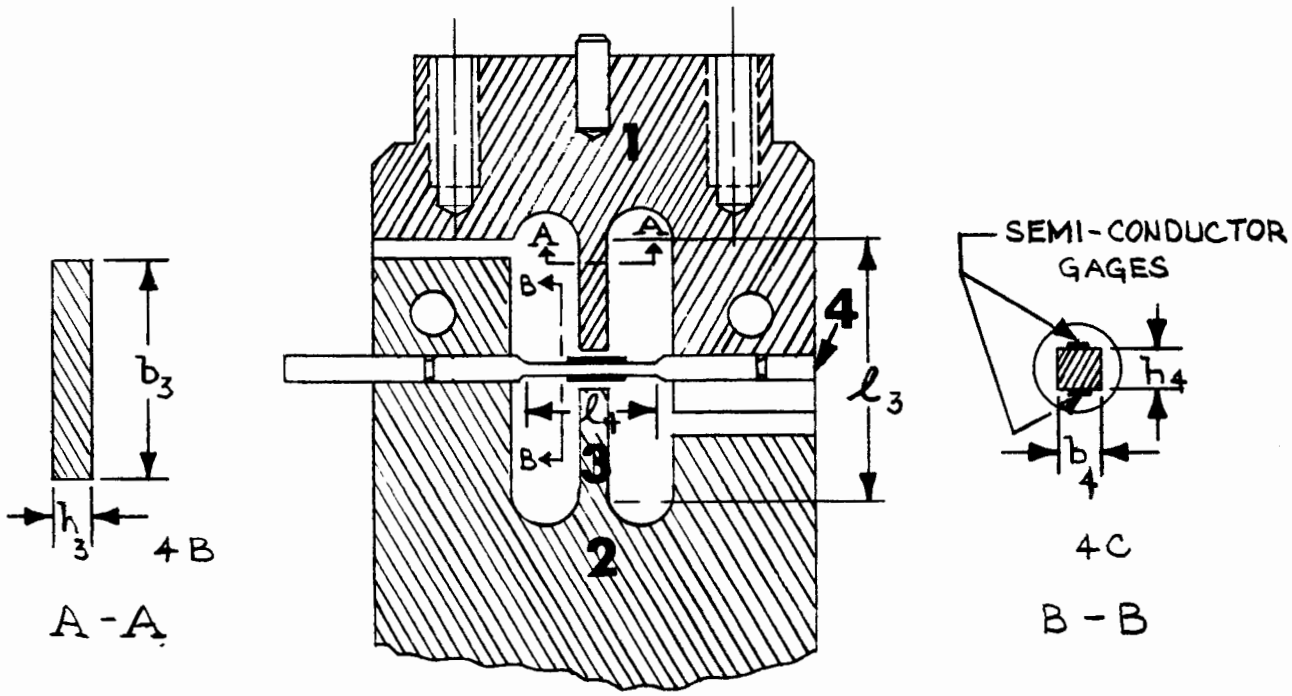
1
2
3
4
A
B
b_3
h_3
4 B
A - A
ℓ_3
ℓ_4
SEMI-CONDUCTOR GAGES
h_4
b_4
4C
B - B

FIG. 4A

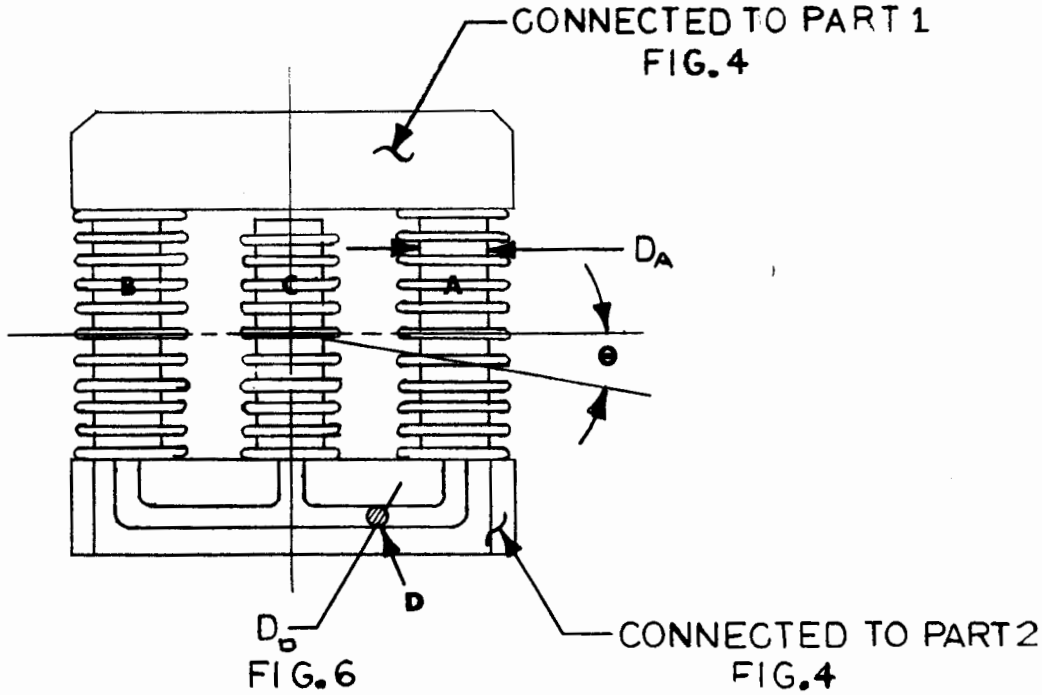
CONNECTED TO PART 1
FIG. 4
D_A
B
C
A
θ
D
D_D
FIG. 6
CONNECTED TO PART 2
FIG. 4

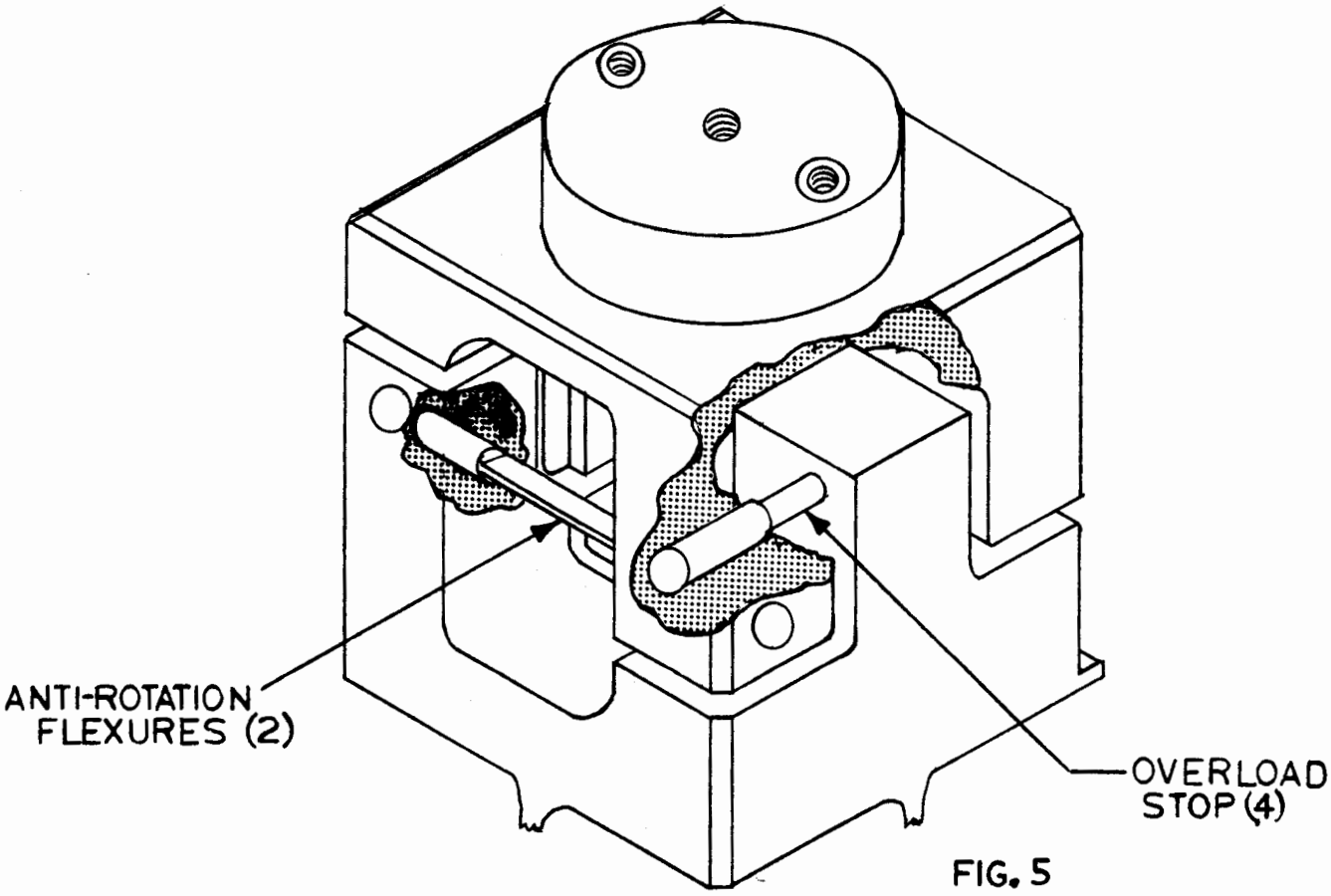
ANTI-ROTATION
FLEXURES (2)
OVERLOAD
STOP (4)

FIG. 5

ERROR SOURCES IN TRANSDUCER CRYSTALS

D. B. Davis

Sandia Corporation

March 27, 1972

ABSTRACT

Certain systematic errors that have been encountered in piezoelectric transducers using poly-crystalline ferroelectric ceramic sensing elements are shown to be related to the inherent qualities of the crystal sensor. The errors of zero-shift, charge sensitivity change vs frequency, and charge sensitivity-voltage sensitivity deviation are partly a function of polarization switching in the crystal sensing element. Tests were run which show that the amount of energy required to cause this switching is very low, less than 1% of the typical maximum stress level allowed by the design of the transducer. Therefore, mechanical stress is more than adequate to cause switching and, thus, errors in output.

TABLE OF CONTENTS

		Page
I.	Introduction	1
II.	Zero Shift	2
	A. Tests	2-3
	B. Major Hysteresis Loop Tests	3
	C. Minor Hysteresis Loop Tests	3-5
	D. Hysteresis Loop Results	5-6
III.	General Sensitivity Changes with Frequency	6
IV.	Charge Sensitivity Changes with Frequency	7-8
V.	Charge Sensitivity - Voltage Sensitivity Deviation	8-9
VI.	Conclusions and Recommendations	9-10
VII.	Acknowledgement	10
VIII.	References	11

TABLE AND FIGURES

		Page
Table I	Data Used For Log/Log Plot of Hysteresis at Zero Field Developed by Minor Loop Voltage Excursions	12
Figure 1	Acceleration Time Signatures: 18-Inch Actuator	13
Figure 2	Typical Acceleration-Time Signatures from Piezo-resistive, Ferroelectric, and Quartz Accelerometers. Traces are from the same tests.	14
Figure 3	Typical Acceleration-Time Signatures from Ferro-electric and Quartz Accelerometers. Traces are from the same tests.	15
Figure 4	Circuit Used for Deriving the Major and Minor Hysteresis Loops	16
Figure 5	Major Hysteresis Loops of Endevco P-6 Type Ferroelectric Ceramic Crystal	17
Figure 6	Minor Hysteresis Loops of Ferroelectric Ceramic Crystals	18
Figure 7	Hysteresis at Zero Field Developed by Minor Loop Voltage Excursions	19
Figure 8	NBS Charge Sensitivity vs Frequency for Endevco 2271A Accelerometer	20
Figure 9	Sandia Charge Sensitivity vs Frequency Kistler 805A Accelerometer	21
Figure 10	Sandia Charge Sensitivity vs Frequency Endevco 2225M2 Accelerometer	22
Figure 11	Charge Output and Voltage Output vs Frequency for Endevco 2225M2 SN YA75	23
Figure 12	Percent Deviation of Charge and Voltage Sensitivity vs Frequency from 100 HZ Sensitivity Value for Endevco 2225M2 SNYA75	24
Figure 13	Charge Sensitivity and Voltage Sensitivity Con-verted to Charge vs Frequency for Kistler 805A SN1123	25
Figure 14	Percent Deviation of Charge and Voltage Sensitivity vs Frequency from 100 Hz Sensitivity Value for Kistler 805A SN1125	26

ERRORS IN CRYSTAL TRANSDUCERS

I. Introduction

External influences on mechanical objects can often be inferred by measuring the external influence (i.e., acceleration, pressure) into an electrical output (i.e., voltage, charge). These electrical outputs should in general behave in some predictable manner in response to the mechanical input. There are many types of transducers that will provide this transformation. When non-linear or unpredictable responses begin to show up in the electrical outputs, errors in the values taken for the mechanical inputs begin to show themselves. Some of the errors associated with the self-generating seismic system transducers will be dealt with in this paper. The sensing elements in the transducers of interest are classed as either quartz or ferroelectric ceramic crystals and as such obtain their outputs from their piezoelectric quality.

Various conditions both internal and external to transducer crystal elements can cause deviation from the expected behavior of the electrical output with mechanical input. A few of these conditions are changes in temperature, humidity, and stress levels. When any of these conditions occur, errors occur in the electrical outputs. The errors of interest here are (1) transducer electrical zero shift, (2) sensitivity changes with frequency, and (3) sensitivity changes with monitoring mode. Many of the experiments conducted used accelerometers as a transducer since they were readily available.

II. Zero Shift

This study was prompted by the unexplained appearance of zero shifts in the acceleration-vs-time signatures of the ferroelectric accelerometers used in test items that were being tested in Sandia Laboratories' 18-inch actuator. The presence of this zero shift invalidates any data that can be derived from the acceleration-time signatures. A sample of these acceleration-time signatures is shown in Figure 1.

Many of the available piezoelectric accelerometers show a zero-shift in the electrical output when the accelerometer is subjected to transient accelerations. This zero shift is more prevalent with some types of sensing elements. Tests conducted on the 18-inch actuator provided an environment that repeatedly produced zero shifts in accelerometer outputs. Both quartz and ferroelectric ceramic crystal accelerometers were used to determine the differences in the amount of zero shift exhibited by the two crystal types. The quartz accelerometers showed no zero shift, while the ferroelectric accelerometers showed repeatable shifts up to 20% of the faired response output. Typical acceleration-time signatures from piezoresistive, ferroelectric, and quartz accelerometers are shown in Figures 2 and 3. These tests indicated that the ferroelectric ceramic crystal elements were more susceptible to zero shift than were cut quartz crystal elements subjected to similar environments.

A. Tests

Tests were run on the ferroelectric ceramic crystals to determine the cause of the zero shift. Two types of tests were conducted on

Endevco 2222A and 2220M1 accelerometers which had lead-zirconate-titinate ceramic ferroelectric sensing elements.

Tests of (1) major hysteresis loops, and (2) minor hysteresis loops were conducted. The hysteresis loop tests were conducted by R. H. Plumlee, Org. 5153.

B. Major Hysteresis Loop Tests

The major hysteresis loops were run on the ceramic crystals to determine the "hardness" of the element. The circuit used to determine the loops is shown in Figure 4. The hardness of a crystal is a qualitative measure of the ease with which the polarization vector can be reversed by applying the proper electric field to the crystal. When the ferroelectric element is used as an accelerometer, the harder the crystal the better. With a hard element, the polarization cannot be easily changed by externally imposed electric fields or mechanical stresses. One disadvantage of the hard crystal is that the piezoelectric constants cannot be easily modeled to suit a particular purpose.

C. Minor Hysteresis Loop Tests

Minor hysteresis loops were run on these crystal elements; the same circuit used for the major loops was employed to determine whether a small voltage impressed across the crystal could cause a polarization shift. It was found in the ferroelectric elements tested that the crystals were polarized in one direction and the output leads were attached in a direction perpendicular to the polarization direction. Therefore, any voltage across the

output terminals of the device would create an electric field whose direction would be perpendicular to the polarization direction. In a "soft" crystal, this could be detrimental because the field would tend to cause a rotation of the polarization direction. In hard crystal, there is very little hysteresis because of the lack of polarization shift when the E-field is applied. The inner loop for this crystal would then be a degenerate loop or a line. In the soft crystal materials, a polarization direction shift would exist when the E-field is applied; this would result in a hysteresis loop whose magnitude would be related to the impressed E-field. An electric field is produced during operation of the device in the voltage monitoring mode because of the acceleration induced voltage output of the crystal. If this electric field were sufficiently large, the polarization shift or rotation would manifest itself as an energy change which could account for zero shifts. It was also noted that zero shifts were more prevalent in acceleration-time signatures exhibiting a high-frequency content.

The hysteresis loops were measured on an X-Y plotter. V_X is proportional to the field across the crystal, and V_Y is proportional to the polarization of the crystal. The resulting loop shows the way the polarization vector shifts with respect to impressed voltage. Representative major and minor loops are shown in Figures 5 and 6, respectively. The major loops show that the

ceramic element used in the ferroelectric accelerometers is a fairly soft crystal, because the polarization vector is easily shifted. The minor loops show that appreciable amounts of polarization shift could be caused by very low voltages. A plot of hysteresis at zero field developed by the minor loop voltage excursions is given in Figure 7. Table I gives the data used in deriving the zero field hysteresis plot. The minor loops were run on new crystal elements that had not had a major hysteresis loop run on them.

D. Hysteresis Loop Results

The various hysteresis loop tests indicate that the soft ferroelectric crystal elements are easily switched by electrical means and, therefore, by mechanical means. The mechanism for deriving in the accelerometers used piezoelectric output from ceramic crystals is assumed[2] to be the following four parts:

1. Stress induced transient moment.
2. External E-field induced transient moment.
3. Stress induced polarization shift.
4. External E-field induced polarization shift.

Parts 1 and 2 relax immediately when the stress is removed; parts 3 and 4 relax very slowly with a wide range of time constants. Part 3 would add to the output of the accelerometer while 4 would subtract from the output. The zero shifts experienced can be in part contributed to the lack of exact cancellation of parts 3 and 4. The contribution of 3 would be the more constant of the two

parts because the effect of 4 will be a function of line length. This dependence is due to the voltage divider action of the shunt capacitance. In the limit with infinite line length, the crystal element would be operating in the charge mode and the effect of 4 would be eliminated.

III. General Sensitivity Changes With Frequency

Piezoelectric accelerometer outputs should be directly related to the mechanical input being measured. Changes in the behavior of the transducer crystal element while the measurement is being taken should not contribute significantly to the output of the transducer. Ideally, the transducer output should be proportional to the forcing function equation. In a single degree of freedom, seismic mass transducer this equation[3] is

$$Y = \frac{\text{"A"}}{\omega_n^2} \left[\frac{1}{\sqrt{1-\left(\frac{\omega}{\omega_n}\right)^2\Big)^2 + \left(2h\frac{\omega}{\omega_n}\right)^2}} \right]$$

where Y = displacement of mass with respect to base of accelerometer.

"A" = acceleration of the base of the accelerometer. (Assumed sinusoidal acceleration.)

h = damping factor.

The transducer electrical output is proportional to the value of Y since this determines the amount that the crystal element is distorted during the measurement cycle. Since Y is frequency dependent, so is the transducer output. Still, the output should be proportional to Y and no extraneous contributions should be seen in the output.

IV. Charge Sensitivity vs Frequency

Charge output vs frequency of several transducers with different sensing elements were compared to determine how closely the electrical responses would agree with the assumed transducer structure equation. Figure 8 shows an NBS calibration[8] of an Endevco 2271A accelerometer. Figures 9 and 10 show Sandia Corporation calibrations[4] of an Endevco 2225M2 and a Kistler 805A, respectively. The calibration standard used in the Sandia calibration was an NBS calibrated 808K1. The sensing elements in the transducers are as follows:

ENDEVCO 2271A	SN UC18	P-10 Ceramic Ferroelectric
ENDEVCO 2225M2	SN LA78	P-6 PZT
KISTLER 805A	SN 1499	Quartz
KISTLER 808K1	SN 1889	Quartz

As can be seen by the charge sensitivity vs frequency plots, the quartz and P-10 element transducers respond in a manner closely predicted by the structure equation. The PZT element transducer has an unforeseen drop in sensitivity with increasing frequency until the sensitivity rise accompanying structure resonance becomes great enough to overcome this anomaly. In the case of the quartz and P-10 element transducers, a basic sensitivity in the linear range is easily obtained while with the P-6 element transducer some kind of a compromise value will have to be used.

In tests[1][2] that were run on various ceramic crystal elements to determine their electrical hardness, the P-6 was fairly soft while the P-10 is almost unswitchable at room temperature. The results from the charge sensitivity vs frequency plots seem to indicate that the

electrically hard crystal elements (P-10, quartz) behave much better than the electrically soft crystal element (P-6).

V. Charge Sensitivity - Voltage Sensitivity Deviation

Experiments [6][7] were conducted on transducers having PZT sensing elements (P-8) and transducers having quartz sensing elements to determine whether monitoring the transducer response in the voltage mode would be any different than that measured in the charge mode. These tests were run on a shaker with a switchable voltage-charge amplifier as the signal conditioner. The results of the comparisons are shown in Figures 11 and 12 for the P-8 sensing element, and in Figures 13 and 14 for the quartz element.

The voltage and charge vs frequency plots for the quartz element show very good agreement with one another. This would indicate that the mode in which the transducer output was monitored would have little effect on the results obtained. The same plots for the P-8 element transducer show a fairly large divergence. If one were to take the lowest frequency(30 Hz) output as reference, the deviation in output for this transducer would be on the order of 5% at 5 KHz. In looking at the P-8 transducer output plots, one would tend to use the voltage mode because of the relatively flat response with frequency in this mode.

The mechanism that may be responsible for the voltage-charge deviation in the PZT crystal element is the assumed way in which the piezoelectric output is derived in the ferroelectric ceramic crystal. Again, the output in the ferroelectric accelerometers tested can be derived through four basic actions:

1. Stress induced transient moment.
2. External E-field induced transient moment.
3. Stress induced polarization shift.
4. External E-field induced polarization shift.

The action of 3 has been shown[5] to be frequency dependent. In other words, the amount of polarization shift is a function of the length of time that the stress is applied. Now, in the charge mode, both actions 2 and 4 are essentially eliminated. 1 and 3 are additive and since the contribution from 3 decreases with frequency, the overall charge sensitivity will be a decreasing function of frequency until the area of resonant frequency is approached. With a crystal element that is extremely hard to switch, the effect of 3 can be minimized and a transducer with a flatter charge sensitivity vs frequency can be realized. In the voltage mode, 1, 2, and 3 add while the effect of 4 subtracts and somewhat offsets the effect of 3 since 3 and 4 are both frequency dependent and opposite in sign. Therefore, the output in the voltage mode can be much more well-behaved. The action of 4, however, is a function of external cable length since the voltage across the crystal element is a function of the external shunt capacitance. As for the quartz element, you have no 3 and 4 and, therefore, there should be good agreement between charge sensitivity and voltage sensitivity.

VI. Conclusions and Recommendations

These experiments and comparisons indicate that transducers which use soft ferroelectric sensing elements may be easily depolarized by mechanical means. The amount of switching done seems to be a function of frequency. The errors of zero-shift, charge sensitivity change with

frequency, and charge sensitivity-voltage sensitivity deviation can in part be related to the internal behavior of the ferroelectric sensing element. A possible way to help eliminate these errors is to pick transducer ferroelectric sensors that are electrically very hard and almost unswitchable at room temperature. Another possibility is to use quartz or piezoresistive element transducers in areas where the errors discussed become important.

VII. Acknowledgment

Thanks are in order for many colleagues at Sandia for their consultive help: R. H. Plumlee, H. L. Webster, P. L. Walter; to H. L. Webster, W. B. Howerton, L. L. Lathrop, R. H. Plumlee through whose efforts many of the plots used in this report were generated.

VIII. References

1. R. H. Plumlee, Sandia Corp., Private Communication

2. R. H. Plumlee, Zero-Shift in Piezoelectric Accelerometers, Sandia Corporation report, SC-RR-70-755, dtd March 1971

3. Dale Pennington, Piezoelectric Accelerometer Manual, Endevco Corporation publication, 1965

4. H. L. Webster, Sandia Corp., Private Communication

5. R. H. Plumlee, High Field Polarization Reversal in Polycrystalline Ferroelectrics, Sandia Corporation report, SC-RR-69-391, Oct. 1969

6. W. B. Howerton, Sandia Corp., Private Communication

7. L. L. Lathrop, Sandia Corp., Private Communication

8. National Bureau of Standards, Calibration of Endevco 2271A No. UC18, Aug. 4, 1970

TABLE I

Data Used For Log/Log Plot of Hysteresis at Zero Field Developed by Minor Loop Voltage Excursions

A. Accelerometer Endevco Model 2220 M1, Serial No. KB14.

Max Loop Voltage Applied	ΔP_r Hysteresis at Zero Field (Coulombs x 10^{-9})
5	0.12
7.5	0.25
10	0.40
15	0.80
15	0.75
20	1.35
25	2.47
30	3.40
35	4.10
40	5.25
50	8.25
50	9.50
50	9.70
75	19.9
100	33.8
150	77.0
200	131.0
250	206.0
300	320.0

B. Accelerometer Endevco Model 2222A, Serial No. VF41.

5V	.12
7	.17
7.3	.27
10	.42
10	.40
15	.72
20	1.20
50	7.50
50	6.25

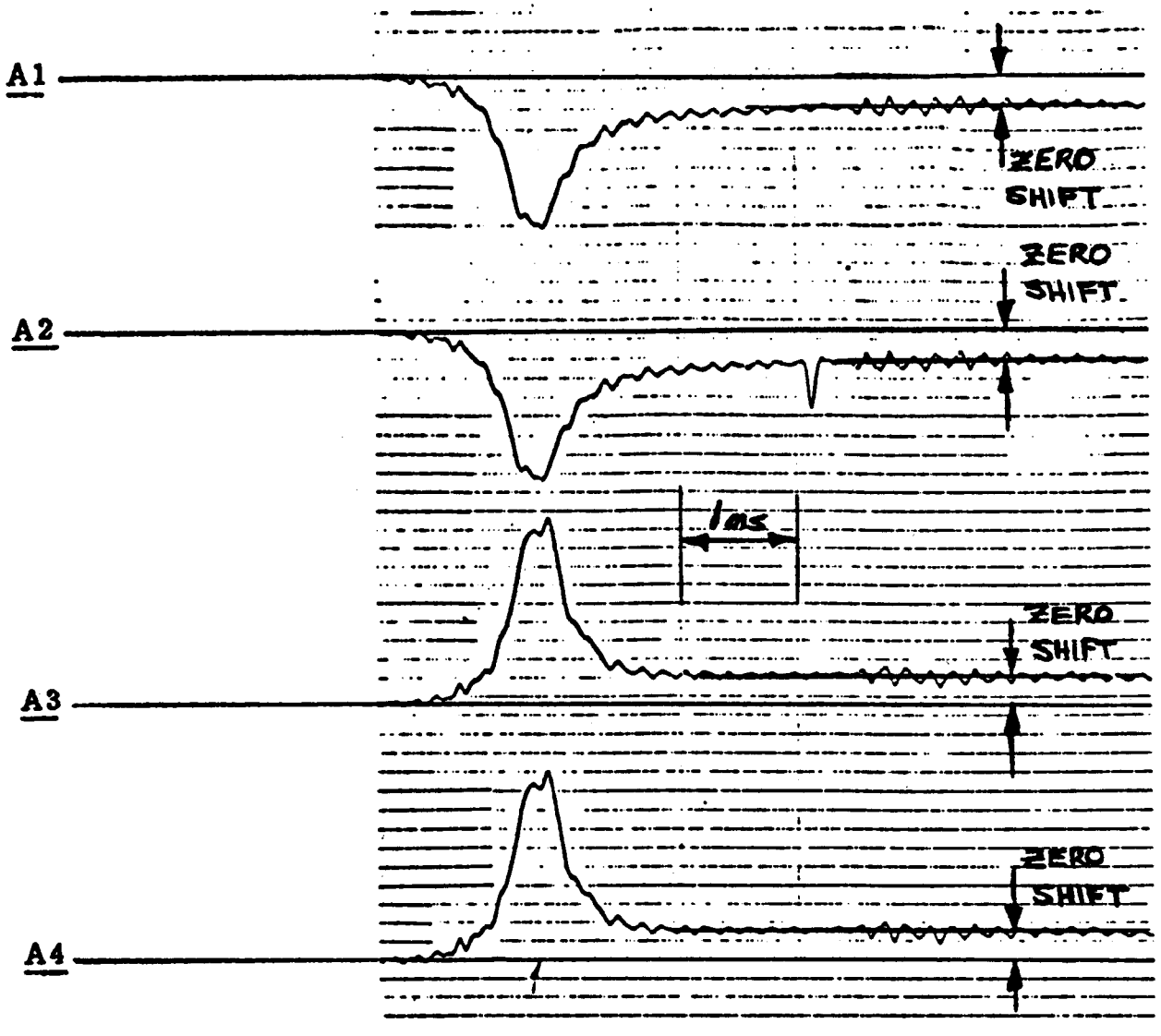

Number	Transducer	Sensor
A1	ENDEVCO 2220M1	ferroelectric ceramic
A2	ENDEVCO 2220M1	ferroelectric ceramic
A3	ENDEVCO 2220M1	ferroelectric ceramic
A4	ENDEVCO 2220M1	ferroelectric ceramic

Figure 1. Acceleration time signatures: 18-inch actuator

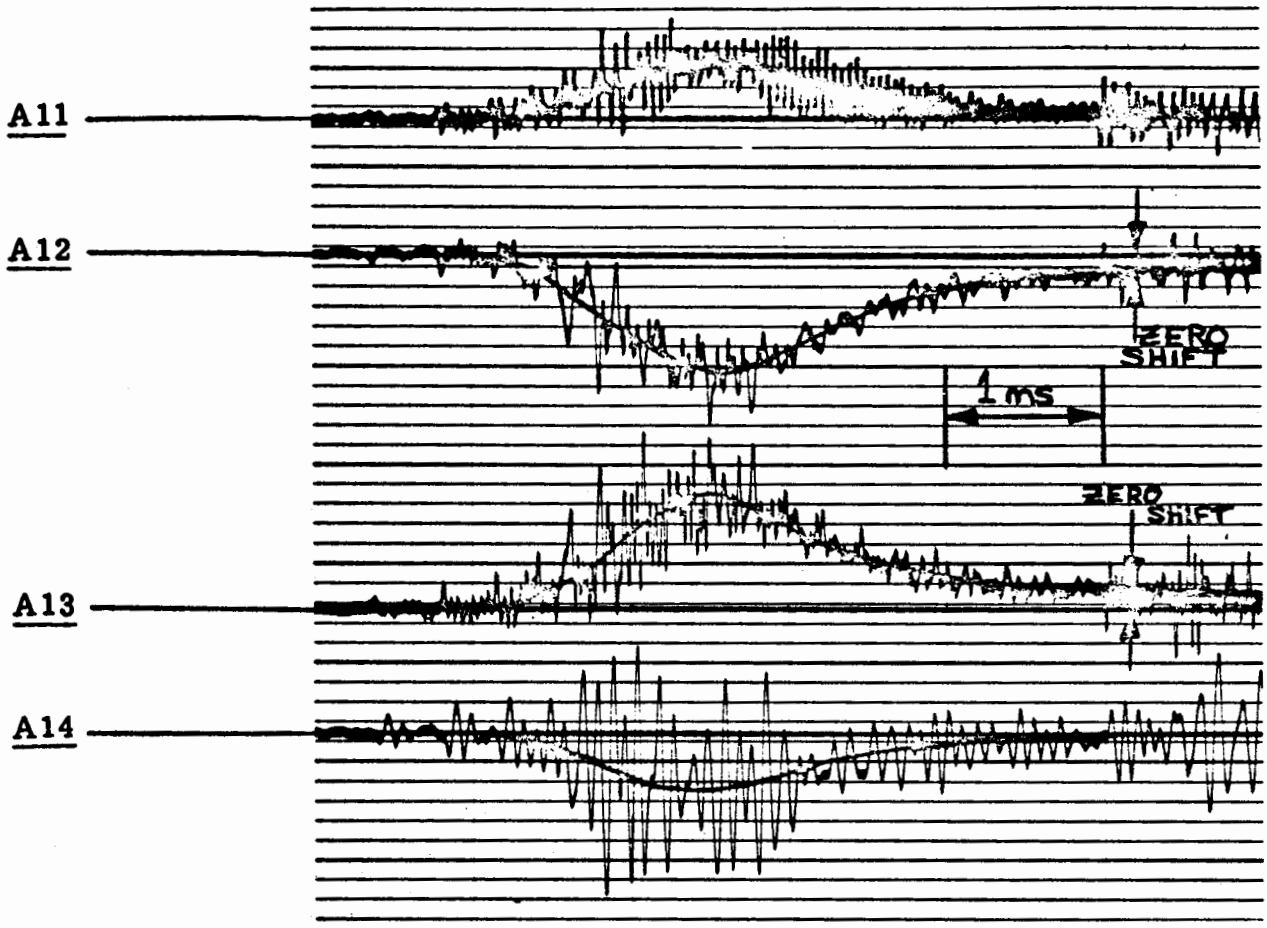

Number	Transducer	Sensor
A11	ENDEVCO 2261M6	piezoresistive
A12	ENDEVCO 2220M1	ferroelectric ceramic
A13	ENDEVCO 2225M2	ferroelectric ceramic
A14	KISTLER 805A	quartz

Figure 2. Typical acceleration-time signatures from piezoresistive, ferroelectric, and quartz accelerometers. Traces are from the same test.

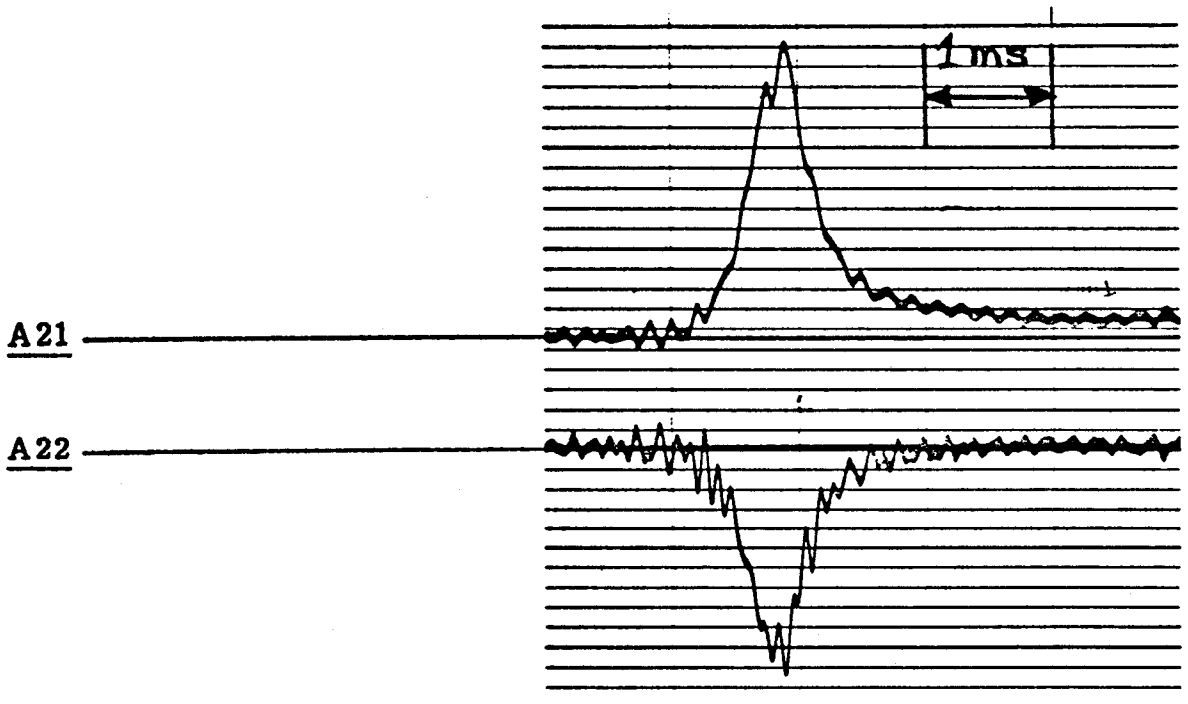

Number	Transducer	Sensor
A21	ENDEVCO 2220M1	ferroelectric ceramic
A22	KISTLER 805A	quartz

Figure 3. Typical acceleration-time signatures from ferroelectric and quartz accelerometers. Traces are from the same tests.

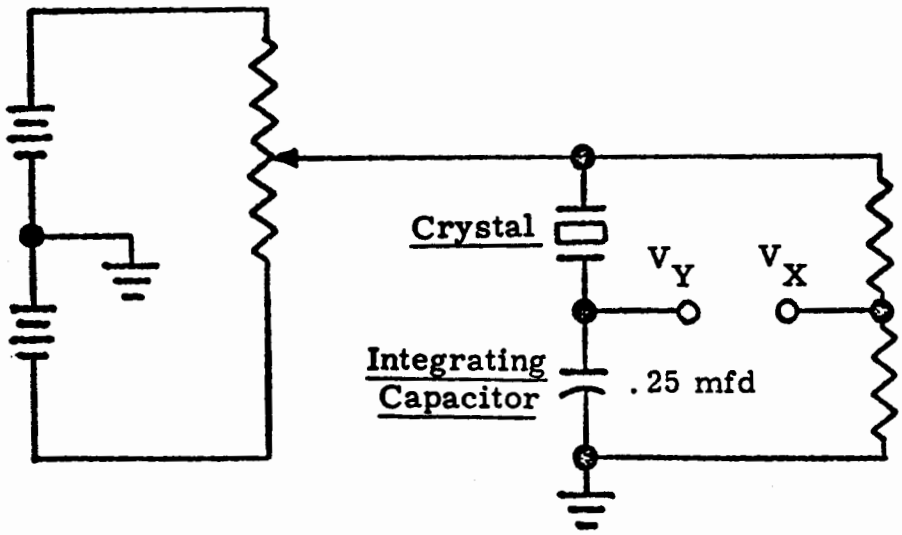

X, Y are the inputs to the X-Y plotter.

Figure 4. Circuit used for deriving the major and minor hysteresis loops

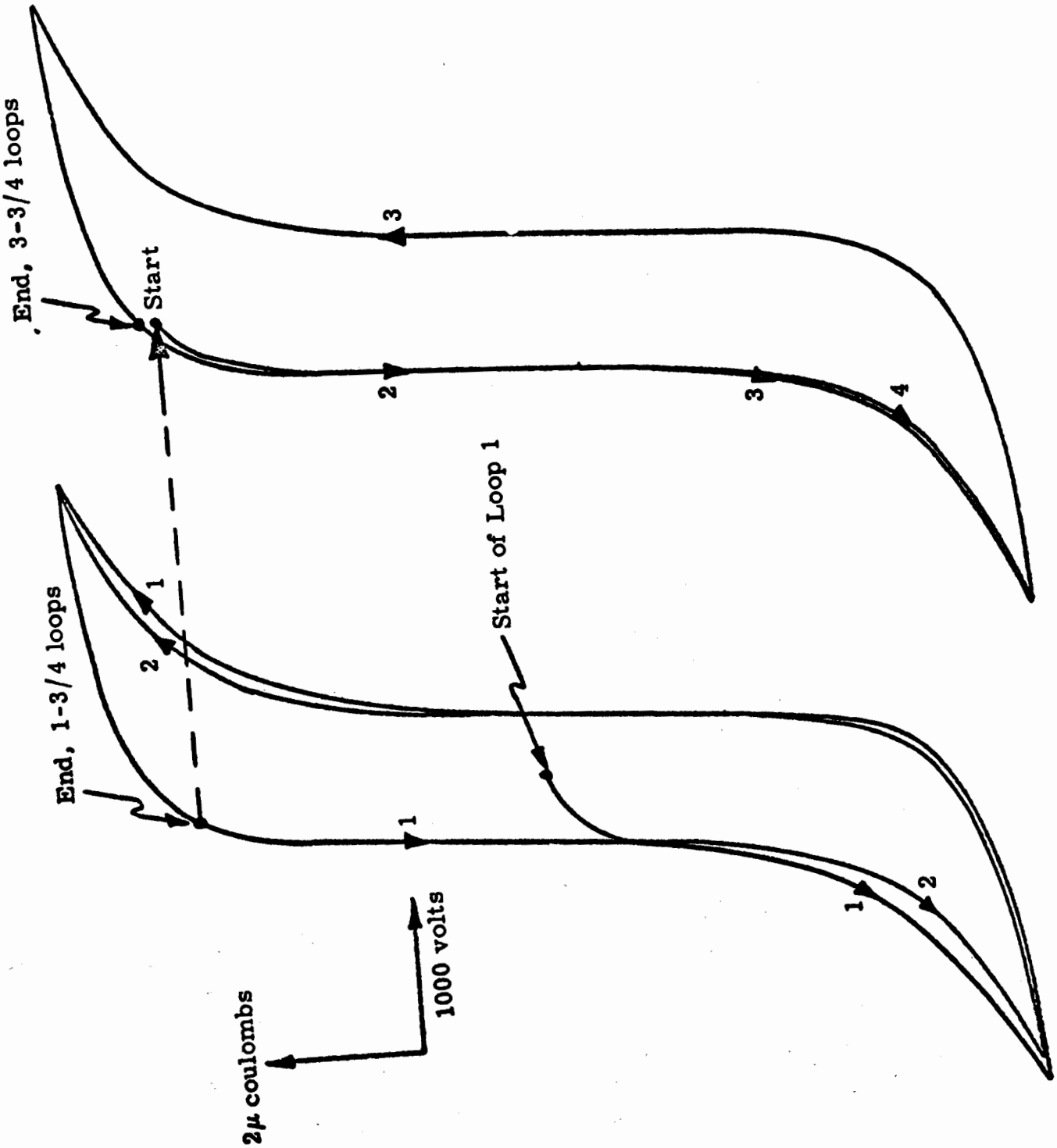

Figure 5. Major hysteresis loops of Endevco P-6 type ferroelectric ceramic crystal

Figure 11. Charge Output and Voltage Output vs Frequency for Endevco 2225M2 SN YA75

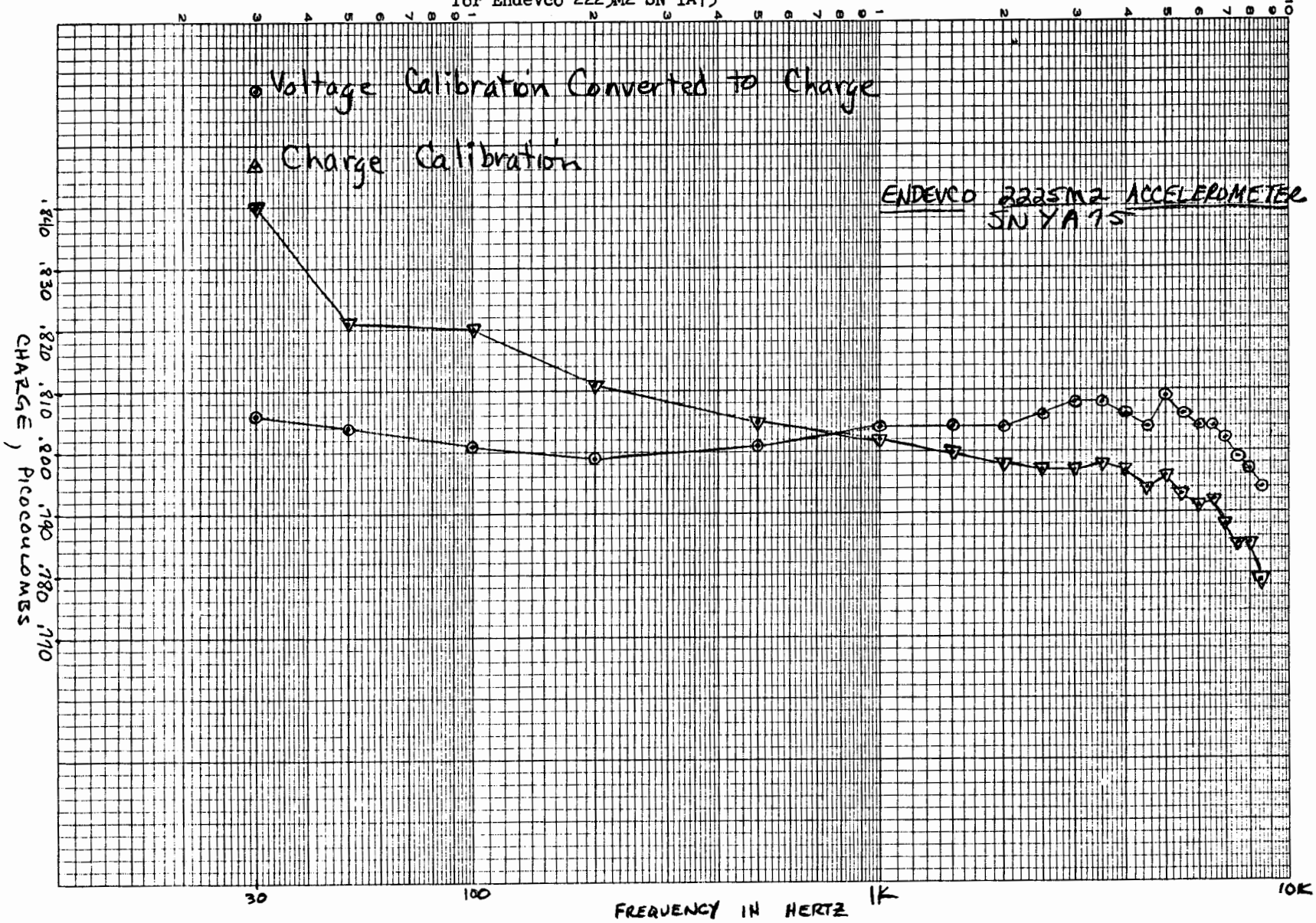

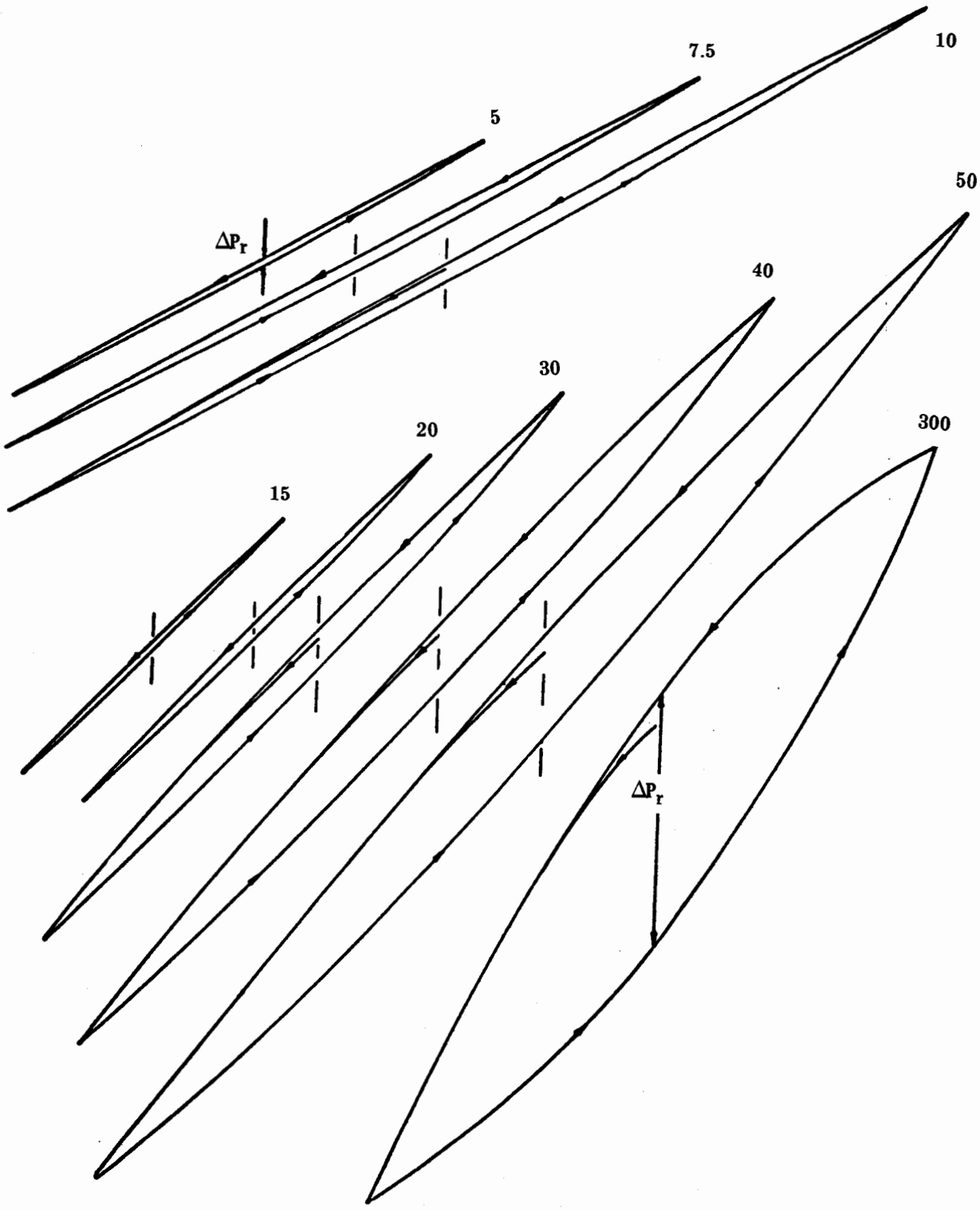

MINOR HYSTERESIS LOOP — CHARGE (ORDINATE) VS. VOLTAGE

Figure 6. Minor hysteresis loops of ferroelectric ceramic crystals

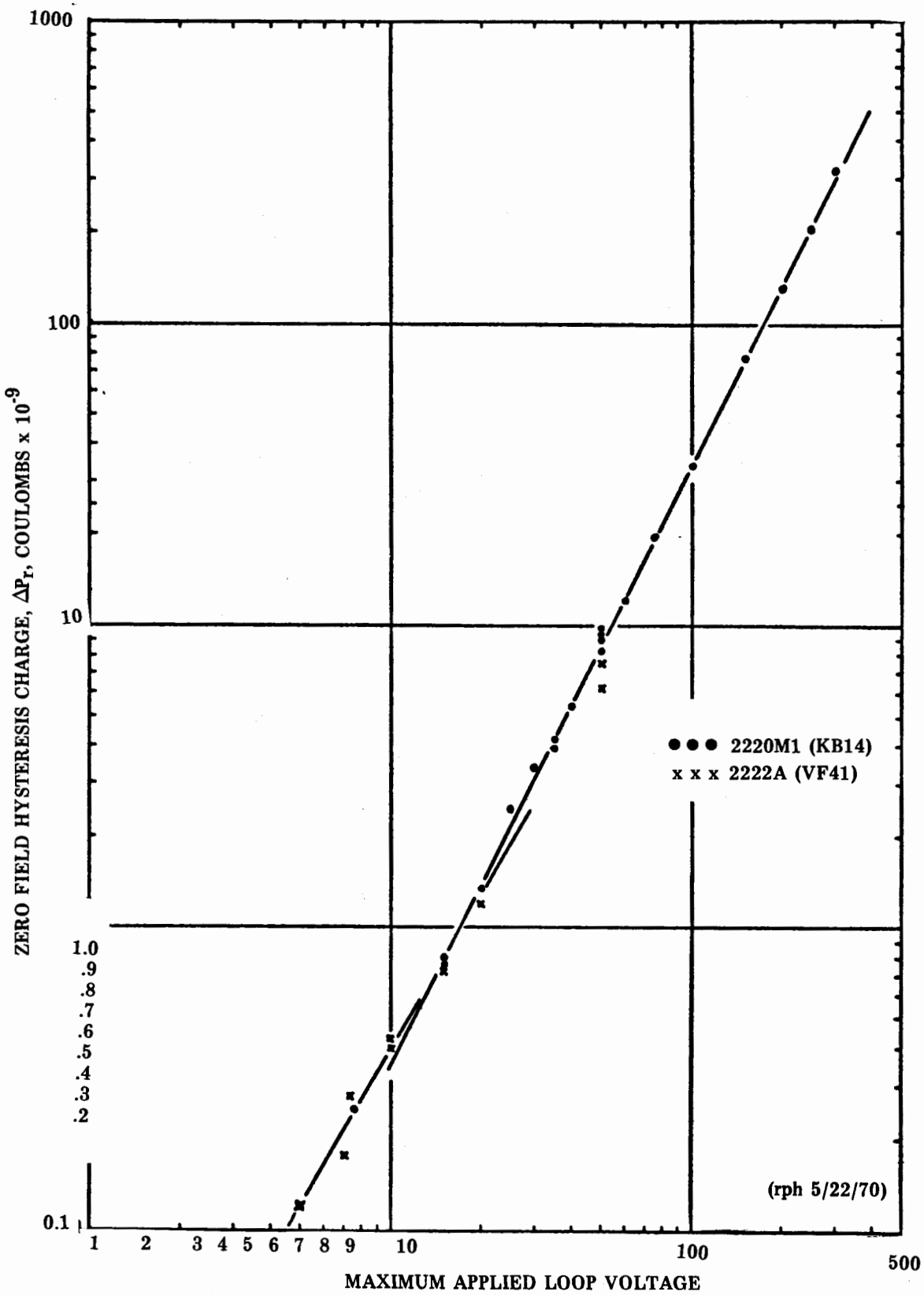

Figure 7. Hysteresis at zero field developed by minor loop voltage excursions

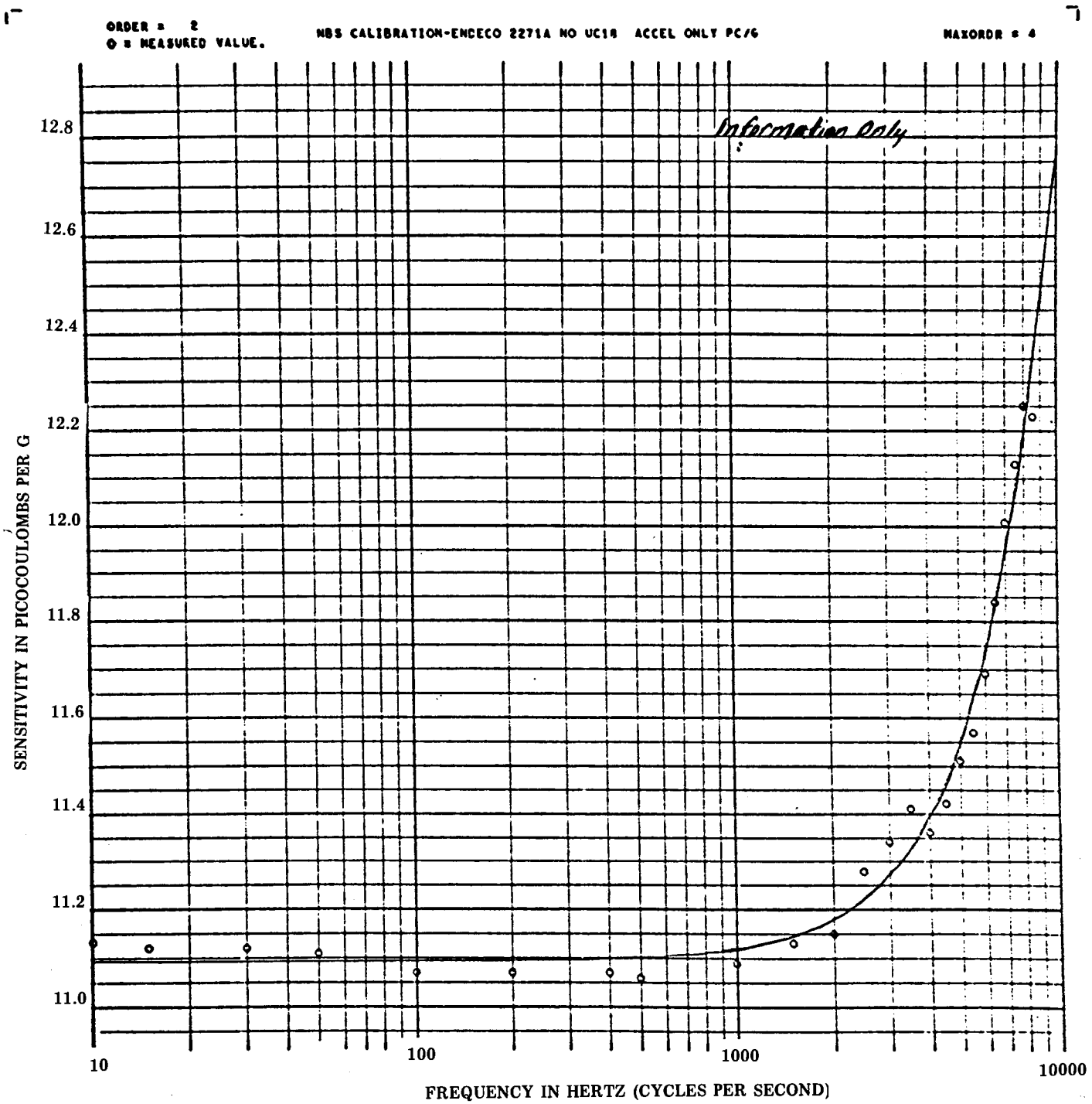

Figure 8. NBS Charge Sensitivity vs Frequency for Endevco 2271A Accelerometer

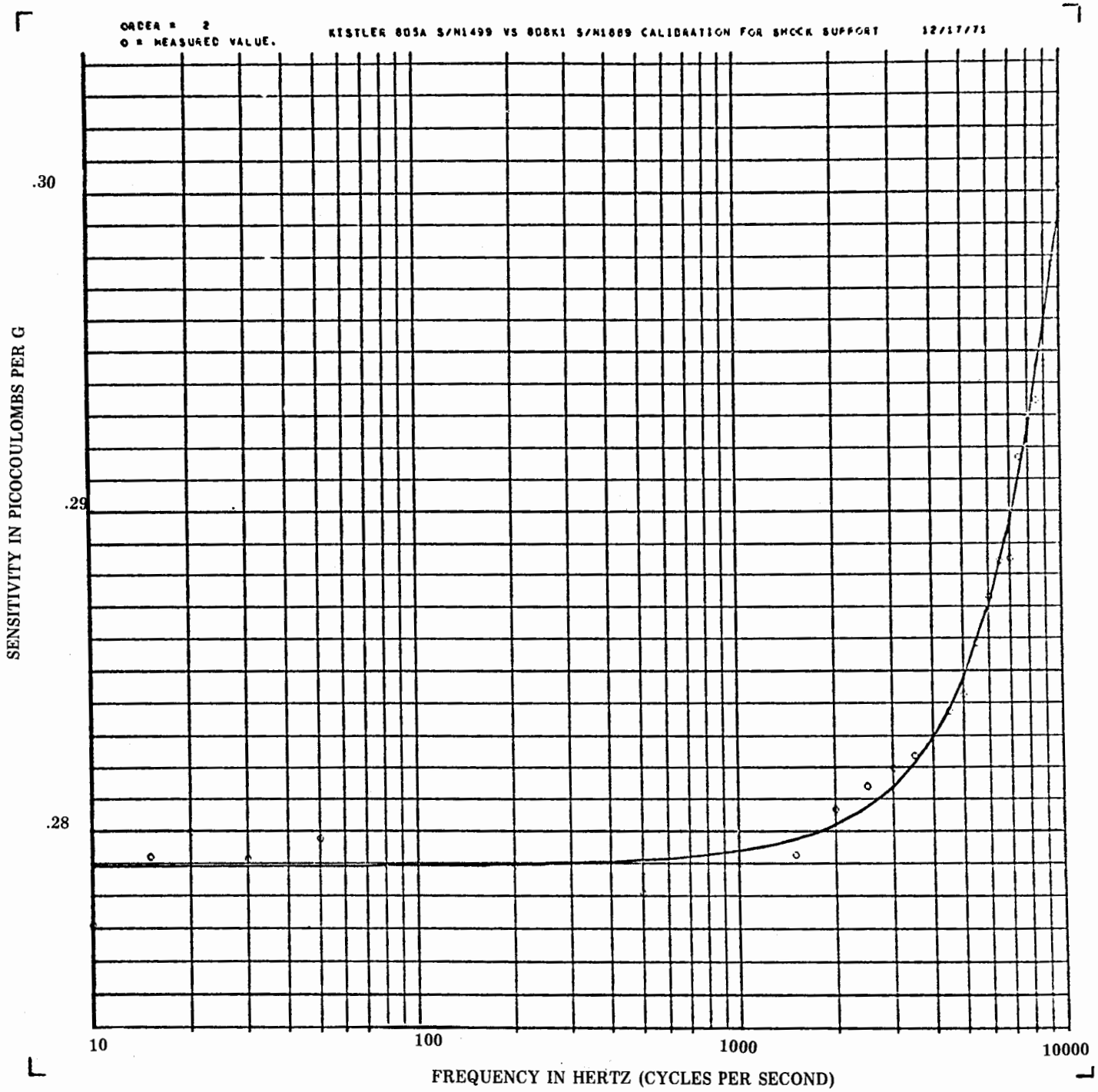

Figure 9. Sandia Charge Sensitivity vs Frequency
Kistler 805A Accelerometer

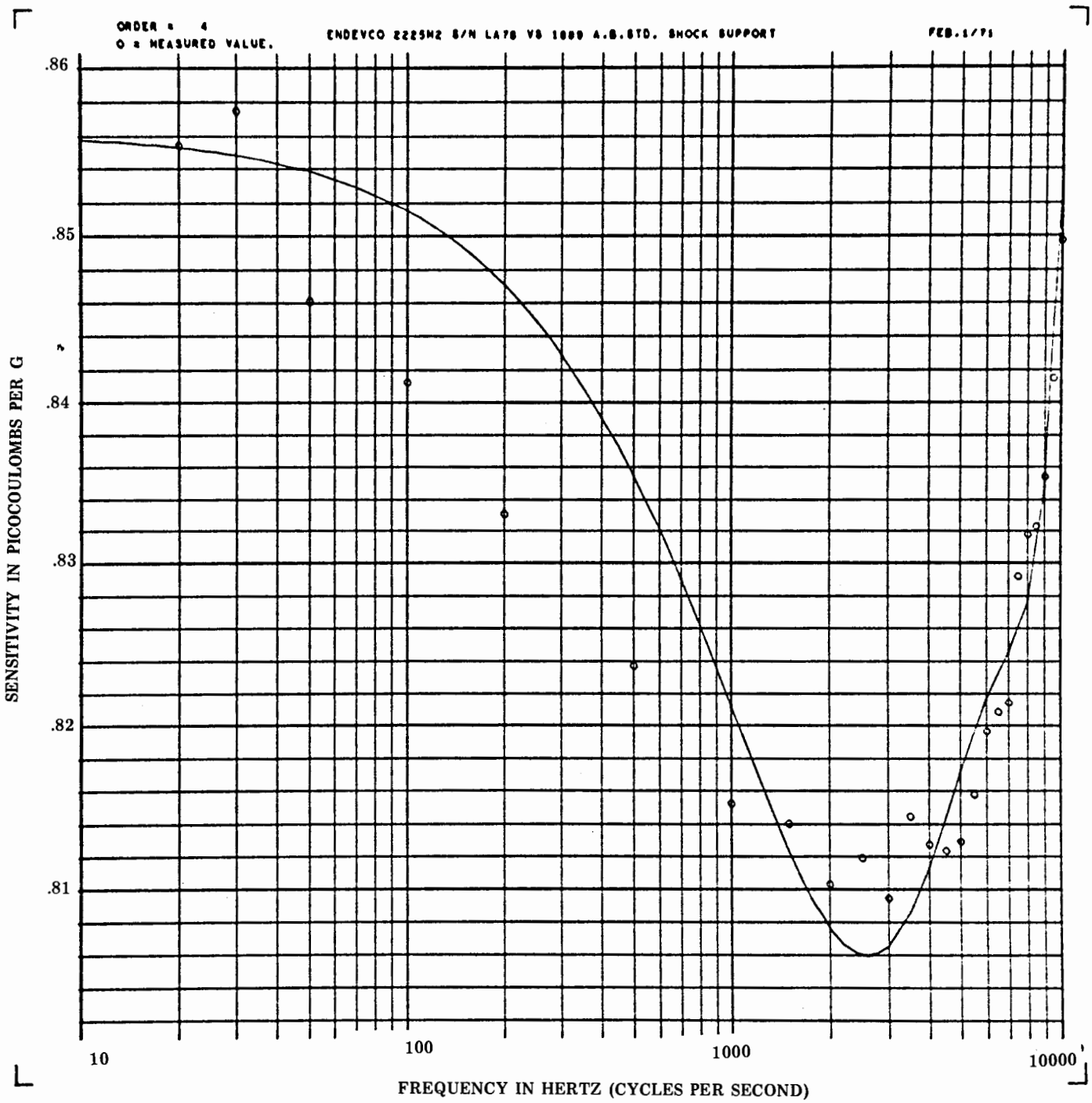

Figure 10. Sandia Charge Sensitivity vs Frequency
Endevco 2225M2 Accelerometer

Figure 12. Percent Deviation of Charge and Voltage Sensitivity vs Frequency From 100 Hz Sensitivity Value for Endevco 2225M2 SNYA75

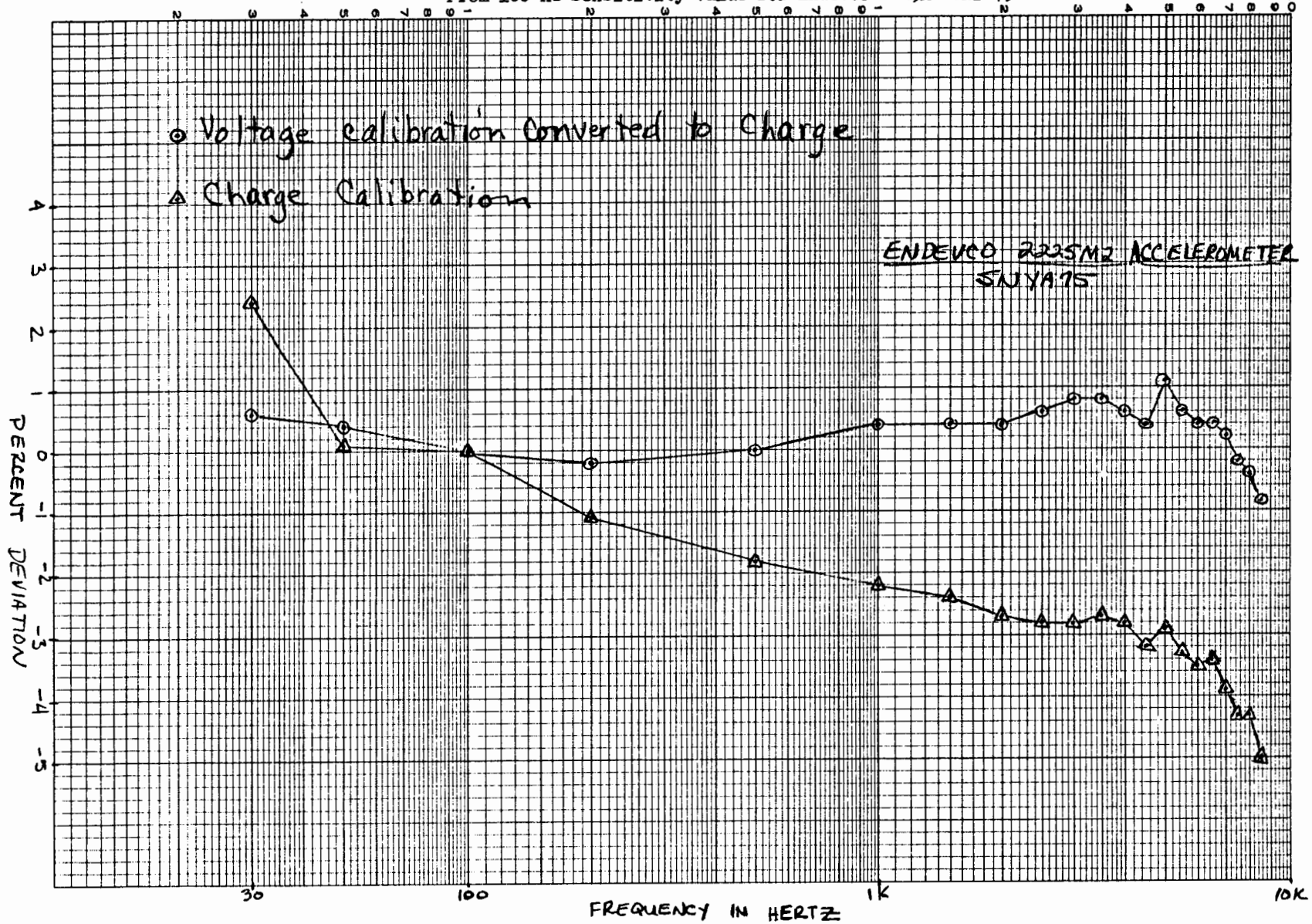

Figure 13. Charge Sensitivity and Voltage Sensitivity Converted to Charge vs Frequency for Kistler 805A SN 1123

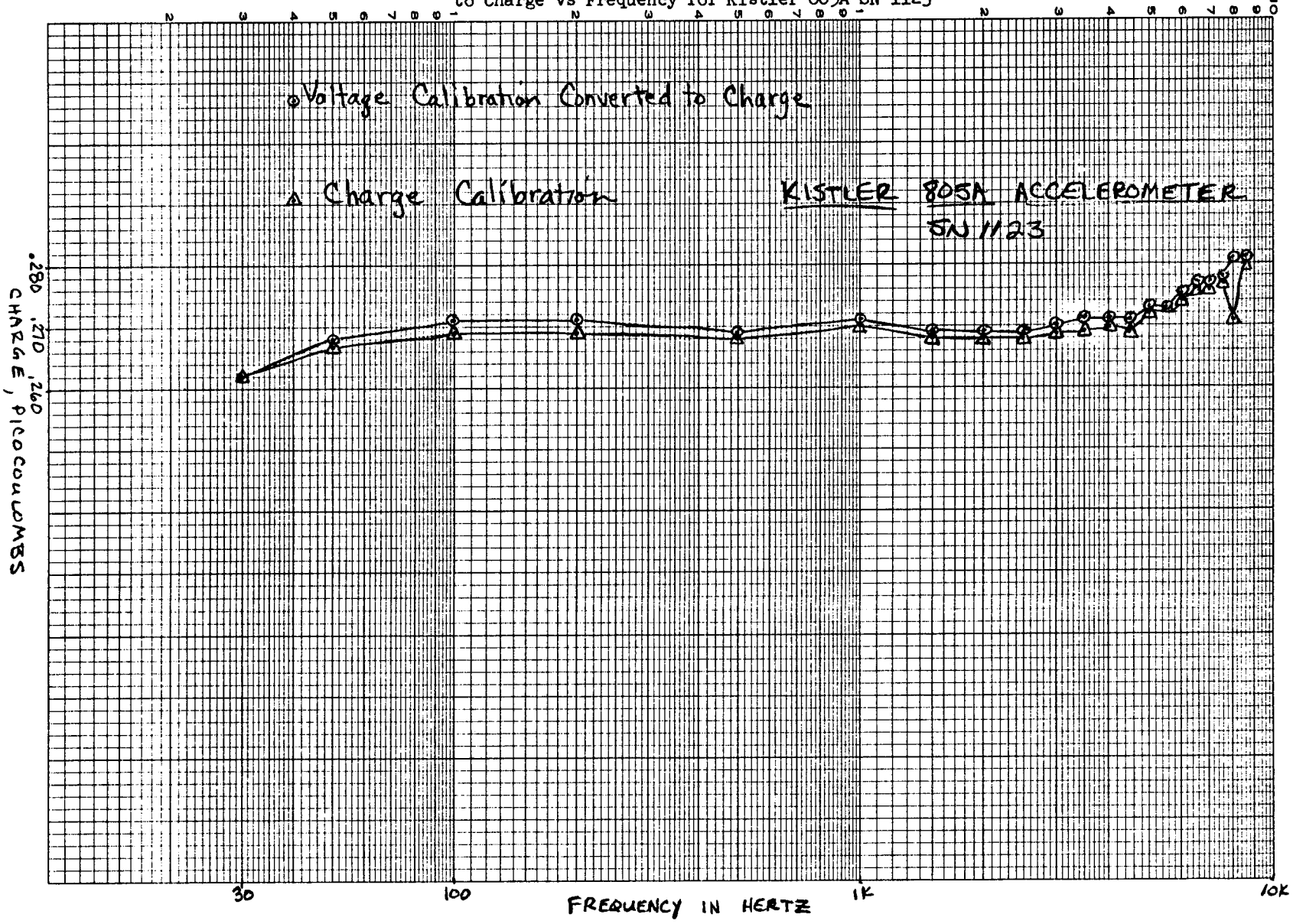

Figure 14. Percent Deviation of Charge and Voltage Sensitivity vs Frequency from 100 Hz Sensitivity Value for Kistler 805A SN1125

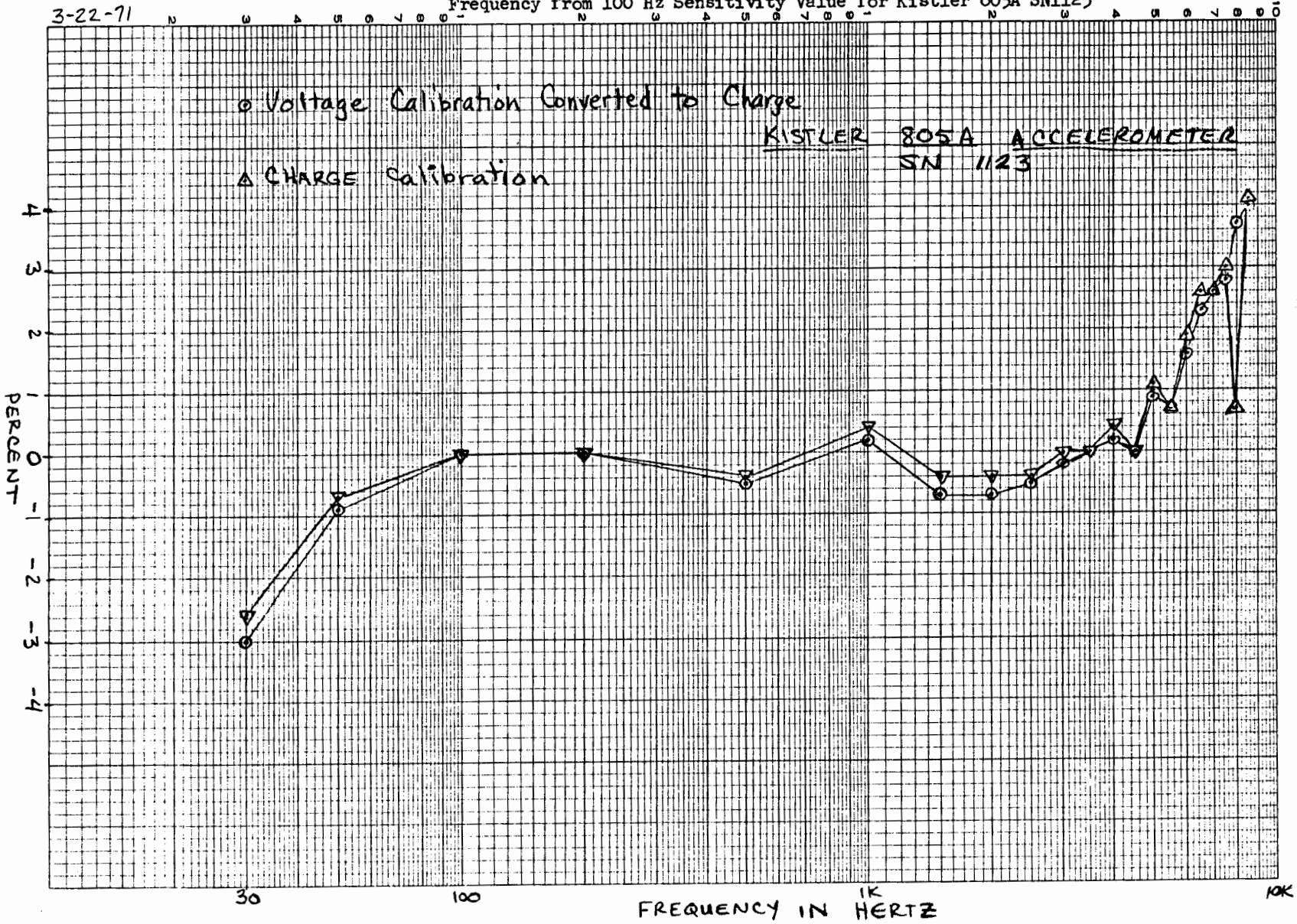

DISCUSSION SUMMARY

SESSION II

Crystals, Piezoresistance, and Strain Gages

Papers: Kicks, Orth & Cannon, Wallis, Erichsen, and Davis

Highlights of the Discussion Period:

The second session was opened by the session chairman and the format was presented. The panel/speakers were introducted and the order of paper presentations was given. It was noted that two of the papers scheduled in the preliminary program would not be presented. It was also noted that copies of all of the papers were not available at that time, but could be obtained by contacting the speaker.

Five papers were presented on subjects relating to crystal, piezoresistive and strain gage transducers as scheduled.

The session was then opened to discussion, and the panel was opened to questions from the floor. In the absence of immediate questions from the floor, the chairman initiated the discussion with a description of the silicon-disk type of pressure transducer currently used in measuring blast pressures at the Air Force Weapons Laboratory. A cursory description of the transducer and the fact that a bonding joint of silicon-to-metal was required in its fabrication prompted a discussion of the bonding technique. It was suggested that the Electric Field Assisted Bonding Technique, as described in the first paper, could be adapted and that probably lower values of hysteresis in the transducer could be realized. Other discussion ensued on techniques and materials of sealing and bonding and on results of performance tests on transducers employing the techniques. Definite improvements in long-term performance were experienced as a result.

The cost-vs.-reliability (accuracy and mean-time-before-failure) of transducers was touched on. The indication was that American transducer manufacturers seem to produce high performance units, but that the price is too high ($300 to $500 range per unit.) Ensuing discussion brought out the fact that European manufacturers are developing low-cost, highly reliable, simple transducers tailored for use in the auto and trucking industry as well as in certain process industries. The apparent concensus of attendant transducer manufacturers at this time is, 1) no money is offered to develop new transduction techniques that will enable a transducer of specified low cost and performance, 2) production problems associated with supplying huge quantities (millions) of units would be overwhelming. The task best be left to the likes of General Electric.

Other discussion prompted a question by the chairman to determine how many of the attendees were involved in measuring transients. It was established that at least 70% (show of

hands) were. Ensuing discussions of transducer performance in the transient mode revealed that most manufacturers have not been too active in specifying product performance in the transient mode. Reasons indicated were, 1) they aren't made aware that the customer intended to use it in the transient mode, and 2) because of limited test facilities, especially in-house. Considerable additional discussion established that efforts should be made to look into defining parameters and proof-test procedures to enable specification/testing of parameters in the transient mode. A lively discussion focused on the need to specify the thermal environment and the response of transducers to applied thermal transients. It was noted that the normal temperature compensation techniques would not necessarily enable acceptable performance in a transient thermal environment. Other discussion in this area was necessarily curtailed due to lapse of time for the session. Consequently, the session was adjourned.

SESSION III

DYNAMIC AND STATIC TESTING AND CALIBRATION

Mr. Paul Lederer, Chairman, National Bureau of Standards

Automation of Velocity Gage Calibration

T. S. Rathke and M. H. Woodward, Sandia Laboratories, 9344

Abstract

A minicomputer is used to automate the calibration of velocity transducers used in underground blast instrumentation. Previously, an oscillograph recorded the analog output of the velocity transducer and data was reduced by hand. This method is tedious, time consuming and inaccurate in defining transfer characteristics of transducers.

The computer is programmed for both data acquisition and data analysis. The general approach to the data acquisition is to digitize the transducer's analog output per programmable time samples generated by a time base generator. Assembly language subroutines are used in the data acquisition portion of the system, which allows the programmer closer control over all variables in the computer interface.

In the data analysis portion of the system, Fortran II is used because it is much easier to program the complex formulas in this data analysis. The technique for the analysis is to fit a line through the data and compare the difference to an established tolerance.

The system software then incorporates both assembly language subroutines and Fortran subroutines to provide an interactive operating system for velocity transducer calibration.

Introduction

The velocity gage calibration facility in our Transducer Evaluation and Calibration Laboratory is just the first of several facilities presently being interfaced with a minicomputer. We are in the process of interfacing to a vibration table for accelerometer calibration, a centrifuge for linear accelerometer calibration and a dead weight pressure system for pressure transducer calibration.

This work was supported by the United States Atomic Energy Commission

We started at the velocity gage calibration facility because it was a manual operation which was very time consuming. All information was obtained from an oscillograph record which is sometimes rather ambiguous to interpret.

What I would like to discuss today is our solution to the automation of the velocity gage calibration facility with respect to the computer system, the stored program, and a comparison between the old system and the new.

I will only go into the velocity gages themselves briefly so that we have a common language for further discussion.

Computer System

In Figure 1 is shown a block diagram of the computer system with its peripheral equipment. The hardware itself is quite simple in that the analog-to-digital converter and the time base generator are simply cards which plug into the I/O bus of the computer. Also, there are two teletypes with the system: for the facility, there is a light duty ASR-33, and for the computer console, a heavy duty ASR-35.

The computer itself is a Hewlett-Packard Model 2116B with the following general specifications:

a) 8K Memory
b) 1.6 Microsecond Cycle Time
c) 16 Channels of I/O

The system operates in the following manner. The velocity gage is caused to react with a 1-g force. The carrier system demodulates this reaction to an analog output which is sampled by the analog-to-digital converter. The sampled data is stored in the computer for further analysis. The time base generator provides accurate timing for the analog-to-digital converter sampling rate.

The facility teletype is for two-way communication between the operator and the computer. Instructions as to the calibration procedure are presented to the operator and proper replies must be made for the process to continue. The computer console teletype is near the computer and is used for final printout of the calibration results in report form.

Velocity Gage

The velocity gage as shown in Figure 2 is composed of a pendulus mass system which changes the magnetic coupling in the two inductive loops on an "E" shaped core. The bridge circuit is completed externally as shown.

There are two types of gages in use: horizontal and vertical. The horizontal gage as shown in Figure 2 is simply the pendulum hanging in a vertical direction. The vertical gage has a special spring which causes the pendulum to maintain a balanced condition while the pendulum is horizontal.

In actual use, the case is moved while the pendulum remains stationary. In the calibration process, we influence the pendulum with a magnet.

Log Decrement Test

In this test, we are determining the gage frequency response. The pendulum is lifted from a balance position with a magnet. Then the magnet is removed allowing the pendulum to fall back to balance, being influenced by the system response. Assuming a second order system, the pendulum return on the gage output should be exponential.

The gage rise and fall time is dependent on the damping ratio (n) of the gage.

Where $$n = \frac{\text{actual gage damping factor}}{\text{critical damping factor}}$$

The rise time of the gage is governed by

$$1 - e^{-2n\omega_0 t}$$

and the gage decay time is determined by

$$e^{-\frac{\omega_0}{2n}}$$

where ω_0 is the gage undamped natural frequency which is set at 3 Hz before the gage is filled with oil.

For an exponential of the form $x = e^{-\alpha t}$

$$\alpha = \frac{\ln \frac{x_1}{x_2}}{t_2 - t_1}$$

where x_1 and x_2 are the values of x at times t_1 and t_2.

By recording the exponential return to the balance position, as shown in Figure 3, measurements of x_1, x_2, t_1, and t_2 can be made and (α) calculated.

Then setting

$$\alpha = \frac{\omega_0}{2n}$$

The value of (n) can be calculated.

The low frequency rolloff (down 5 percent) is approximated by

$$\frac{\omega}{\omega_0} \cong \frac{3}{2n}$$

and the high frequency rolloff (down 5 percent) is approximated by

$$\frac{\omega}{\omega_0} \cong \frac{2n}{3}$$

Previously, this was done by recording the carrier output on an oscillograph and taking values from the plot. This was time consuming and one could have many feet of oscillograph stretched out before him with a highly damped gage.

With the computer's speed, the answers are printed out in final form as soon as the data is put into the computer.

Gravity Test

In this test, the linearity of the gage over a selected range is determined. The pendulum is lifted to one stop and allowed to fall to the opposite stop. The forcing function is a step acceleration pulse of a constant 1 g. In the case of the vertical gage, the step would be a 2-g acceleration force because of the spring which would be helping the pendulum reach the opposite stop. Again, as in the case of the log decrement test, the output of the carrier system is digitized and stored in the computer for analysis as shown in Figure 4.

The area of interest on the gage is determined by the field engineer and is called the set range for that particular gage. The set range is the expected peak velocity which will be seen in a test. To take into consideration the possibility of an overrange condition, the gage is actually analyzed over a range of ±150% of set range.

In many cases, the set range is only a small percent of the gages full scale range. Normally, this would mean that the system output would be in the millivolt region where there would be some doubt as to whether nonlinearities are due to the gage or to the amplifier. Therefore, the gain of the amplifier is used to adjust the set range value to 500 millivolts or above.

The threshold point for the A to D converter is set at 155% of set range. Readings are then stored into computer memory.

Resistance Calibration

In this calibration, a shunt resistance value is determined which will simulate the set range velocity value. Also, as a convenience to the field personnel, four stock resistor values above set range and four stock resistor values below set range are given in the final printout for field recording calibration.

Previously, a decade resistor had to be manually stepped through and the voltage values obtained. Then the voltage values were related to velocity values, with standard resistor values being interpolated from the measured values.

In our computer system, a programmable decade resistor performs the manual operation as described above. The computer can perform the operation and make decisions in a fraction of the time previously taken.

Stored Program

In the development of the system software, two languages were used, Fortran and Assembly. Previously, systems were programmed solely in Assembly Language. By programming in the two languages, we feel that we were operational in a shorter period of time than if we used only Assembly Language. With Fortran we gained the ease of programming the mathematical formula necessary for the data analysis. With Assembly Language we had control over the peripheral device which was impossible with Fortran.

In the development of the system control program, a modular concept was adhered to. What is meant by modular is that the program was made up of a series of subroutines, both Fortran and Assembly Language, callable from a common executive program. Of course, this led to programming problems due to having only 8K of memory. With Fortran requiring 15 to 20 statements of assembly language, the 8K of memory was soon used up. Also, Hewlett-Packard's software requires that their formatter (ASCII to Binary and Binary to ASCII conversion) remain in memory which takes 2K of the memory. The program was broken into two executives at a convenient place. We were reluctant at this point to make the entire program an Assembly Language program; this would tie us, as a development group, to the system permanently. There are several people in the operating group who have some Fortran experience which will allow them to make minor changes to the analysis or computer-operator subroutines as deemed necessary.

As we look at a flow chart of the two executives, some of the problem areas are obvious and our solution to them can be seen.

EXEC1

1. PAGE--Increment a new form to the top of the computer console teletype.

2. HEAD1--Fortran computer-operator interaction requiring the operator to answer general questions about the transducer. Serial number, model number, etc.

3. LOG DECREMENT TEST--Sometimes the field engineer does not require a log decrement test.

4. HORIZONTAL GAGE--This decision allows the proper information to be presented to the operator.

5. HEAD2 or HEAD3--According to the type of gage, Horizontal or Vertical, instructions for the positioning of the gage in the log decrement are given. Test will be presented to the operator via the facility teletype.

6. LOGIT--This Assembly Language subroutine will read data from the A to D card at specific time intervals as determined by the time base generator card. The readings are stored in absolute location 1001_8 up. Program will loop until a data item of less than 504 millivolts is read. At this point, 100 readings, at 400 millisecond increments, will be taken. The data is decoded and put into floating point numbers.

7. MOVE--This Assembly Language subroutine moves data from location 1001_8 up into a common block callable from Fortran. Fortran is unable to call direct to an absolute location in memory.

8. ANAL1--This Fortran subroutine analyzes the data in common and determines the damping factor and the low and high (5%) rolloff points.

9. GRAV--This Assembly Language subroutine reads from the A to D card at specific time intervals as determined by a time base generator card at specific time intervals as determined by a time base generator card. The readings are stored in absolute locations 1001_8 up. After magnet release, 100 readings are taken by the A to D card, with a time interval of 10 milliseconds, and, if necessary, each group of 100 readings will be incremented by 2 until the polarity of the 50th data item has reversed polarity or 720 millisecond increments are exceeded. A trigger voltage of +155% of set range will automatically start the storing of data from this coded voltage value.

10. IS % WITHIN LIMITS--This allows the operator to remain in a loop until he is satisfied with the adjustements of his electronics.

11. HORIZONTAL GAGE?--This decision allows the proper information to be presented to the operator.

12. HEAD4 or HEAD5--Fortran subroutines which instruct the operator of the proper positioning of the gage for the gravity test.

13. GRAV--Same as No. 9.

14. SAVE--Assembly language program which locates certain parameters to be saved on the base page in absolute locations.

15. MOVIT--Assembly language program which takes data from base page to common area for use by Fortran in EXEC2.

EXEC2

1. ANAL2--Fortran subroutine which uses the data in common. The routine preconditions the data for the Linear Least Squares (LLS) program which fits the best straight line through the data and zero.

2. HORIZONTAL GAGE?--This decision allows for the proper information to be presented to the operator.

3. HEAD6 or HEAD7--Fortran subroutines which instruct the operator the proper positioning of the gage for the resistance calibration.

4. CALS--Assembly language subroutine which communicates with the programmable decade resistor. In the resistance calibration, shunt calibration resistors are determined for the set range and for eight standard resistors meaning resistance values which are stock items.

5. ANS--Fortran subroutine which prints out the results from the resistance calibration.

Conclusion

In comparison, the computer system looks at each data point, which it has obtained with an accuracy of 0.3%, and mathematically determines the required information with minimum human error and intervention. The previous system required the interpretation of oscillograph records which allows the possibility of human error. At best, the oscillograph records can only be read to about 3%.

Also, from past history, the oscillograph method will yield 5 gages per day while with the computer system, 24 gages can be calibrated per day. This can be appreciated by the calibration group because it is not uncommon to get a request for the calibration of 80 velocity gages.

By programming with two languages, memory becomes a precious commodity. In the future, we plan to use a magnetic tape transport which will essentially give us the needed memory.

The final printout, see Figure 7, shows the complete calibration information which goes to the field engineer.

The interactive information required at the facility is shown in Figure 8.

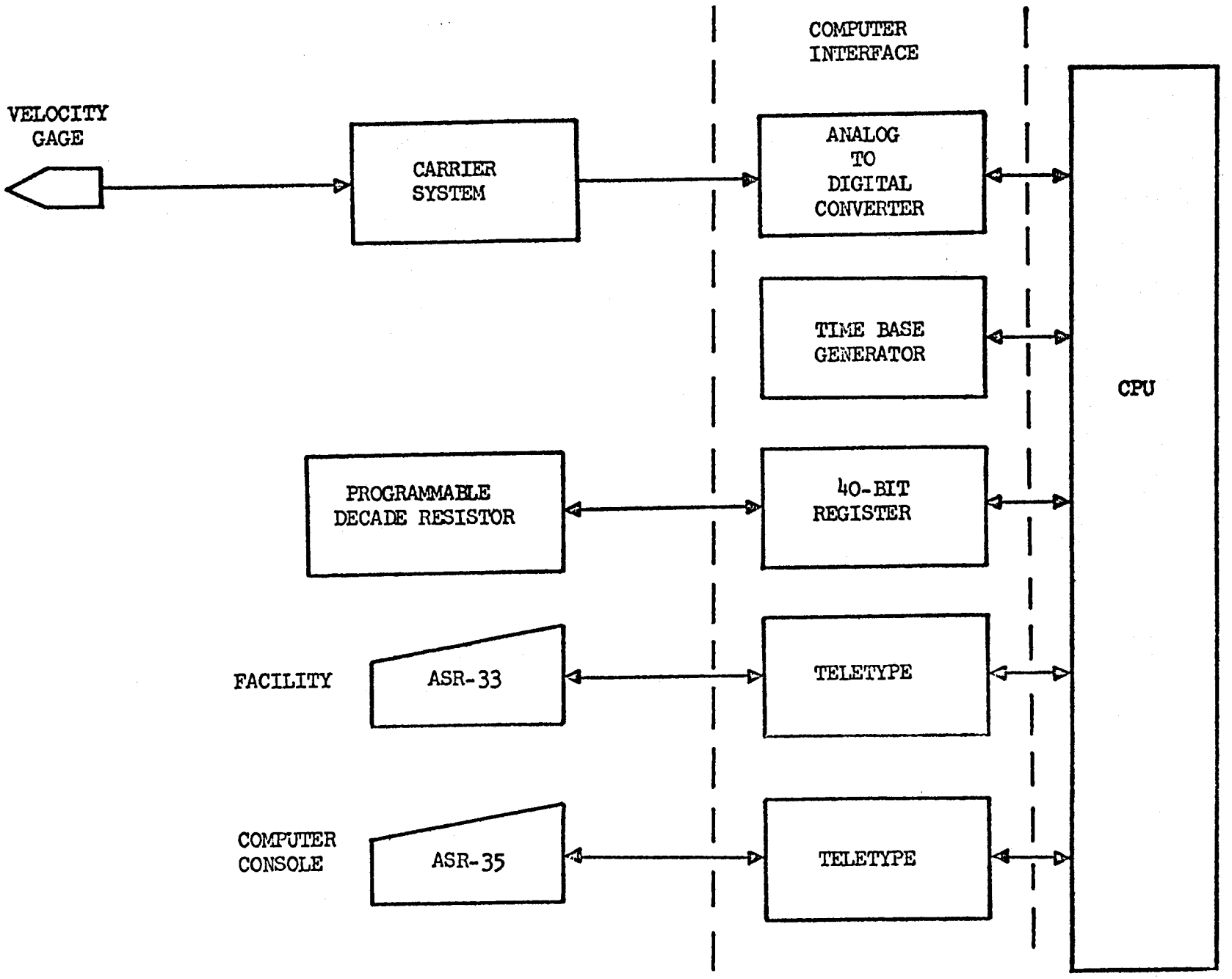

FIGURE 1 SYSTEM BLOCK DIAGRAM

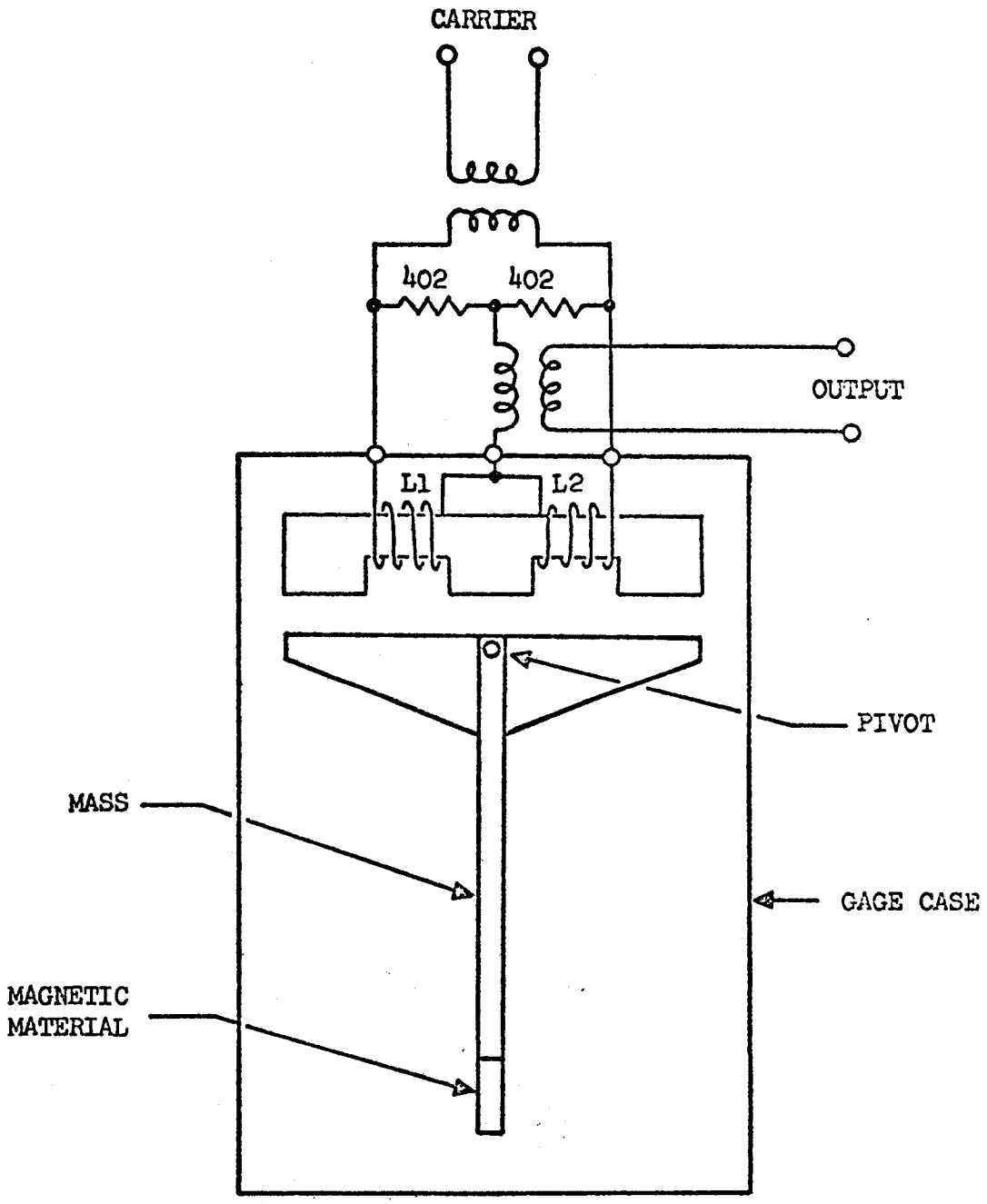

FIGURE 2 VELOCITY GAGE CIRCUITRY

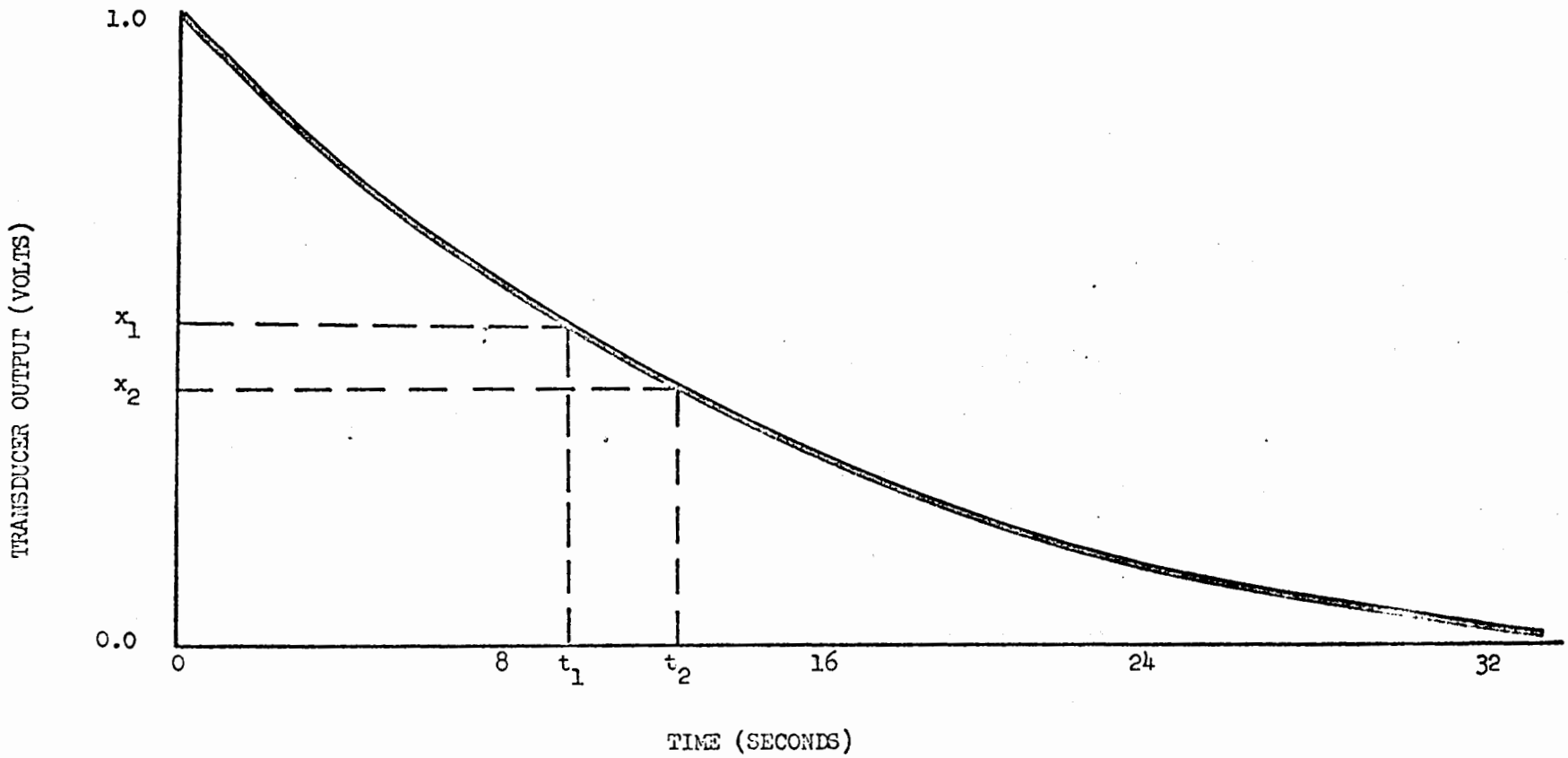

FIGURE 3 LOG DECREMENT TEST

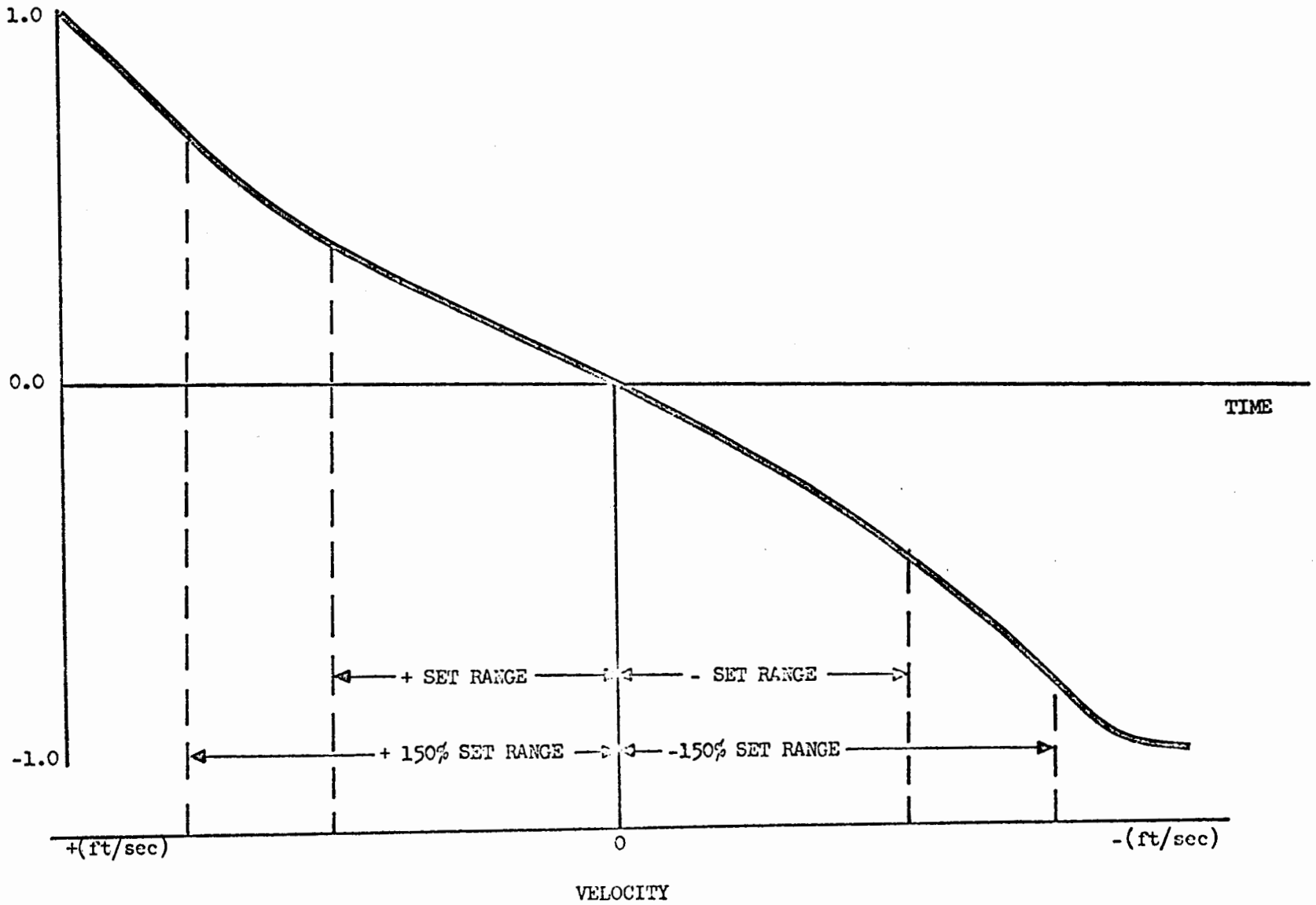

FIGURE 4 GRAVITY TEST

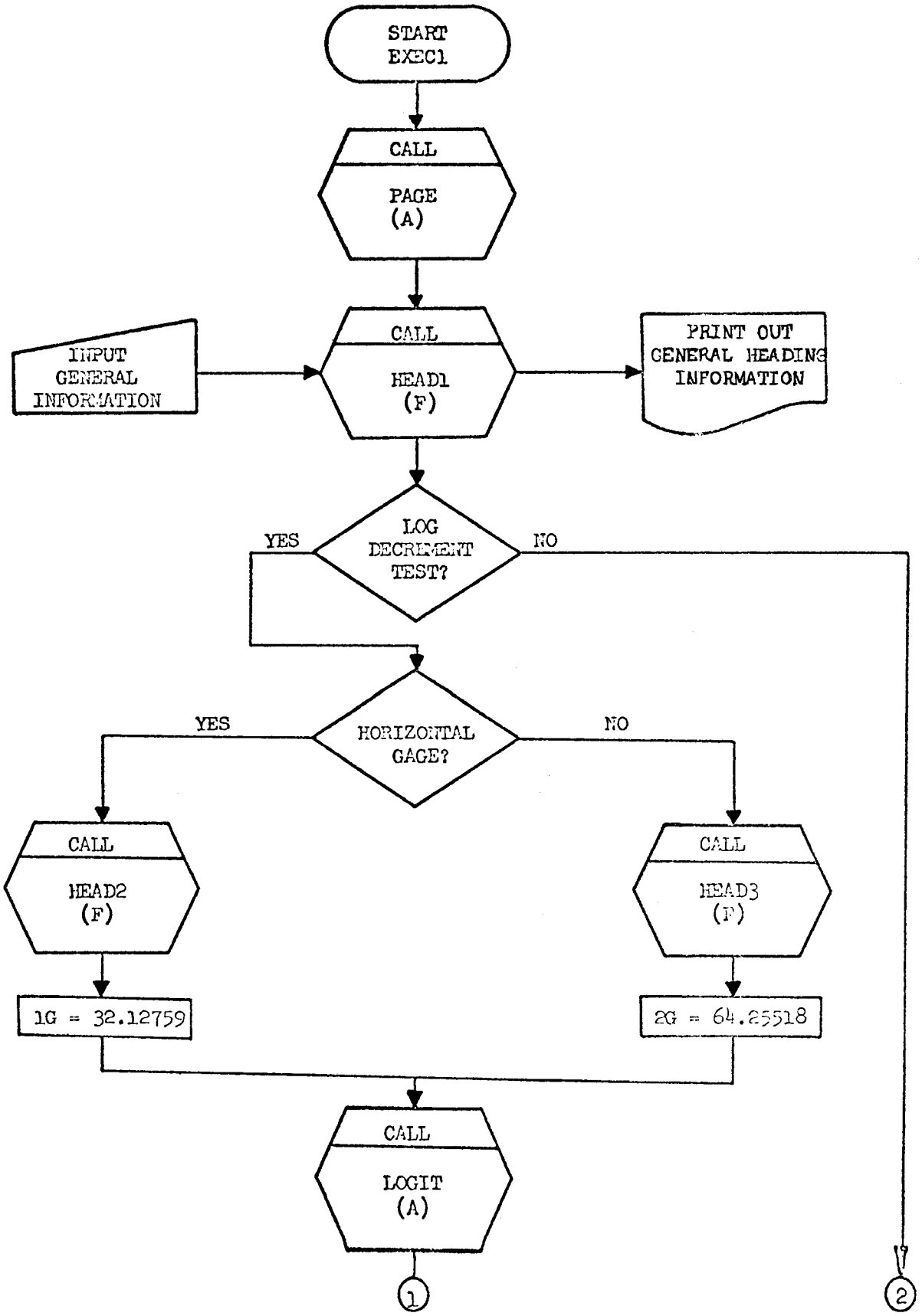

Figure 5-a FLOW CHART

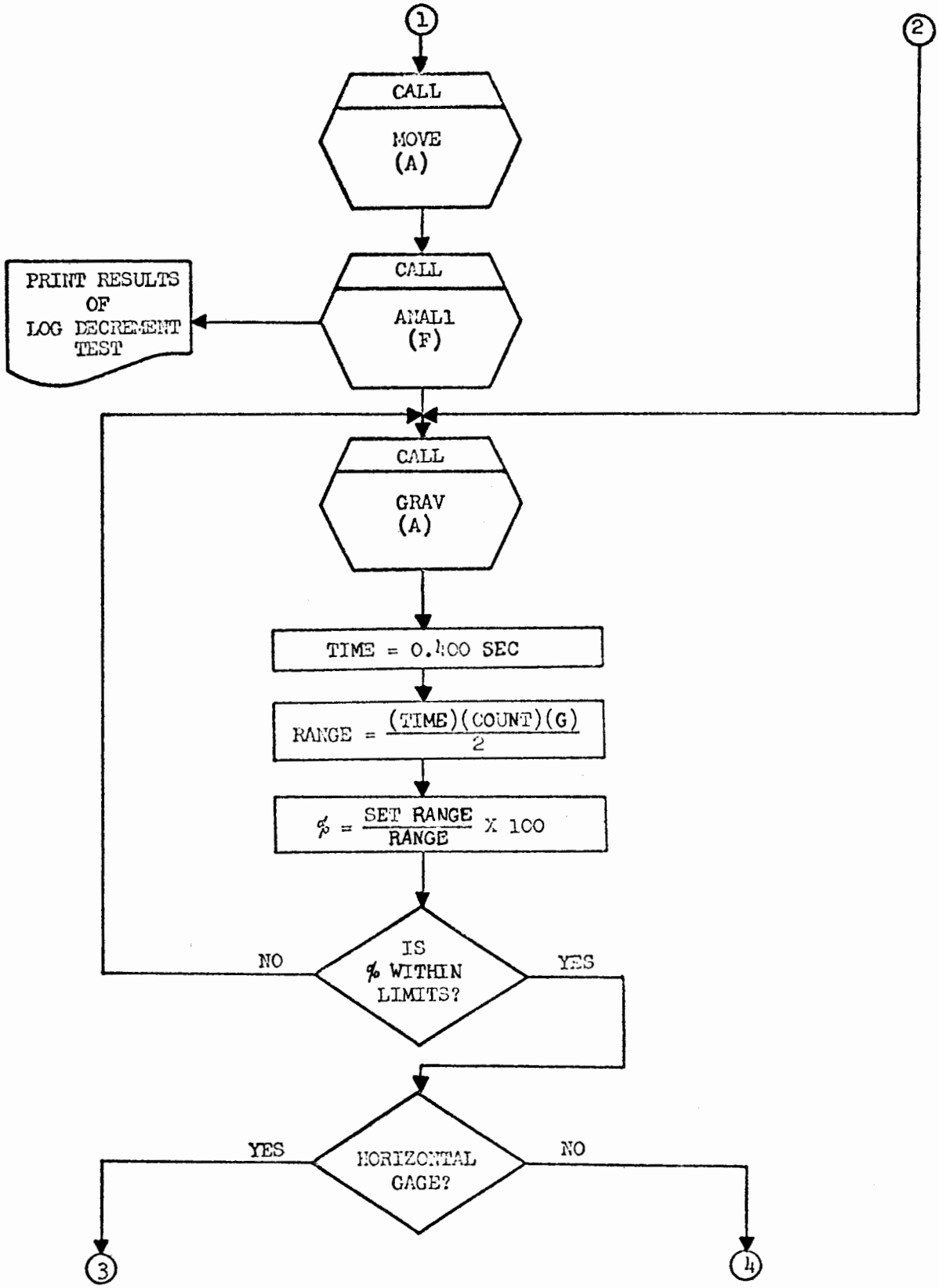

FIGURE 5-b FLOW CHART

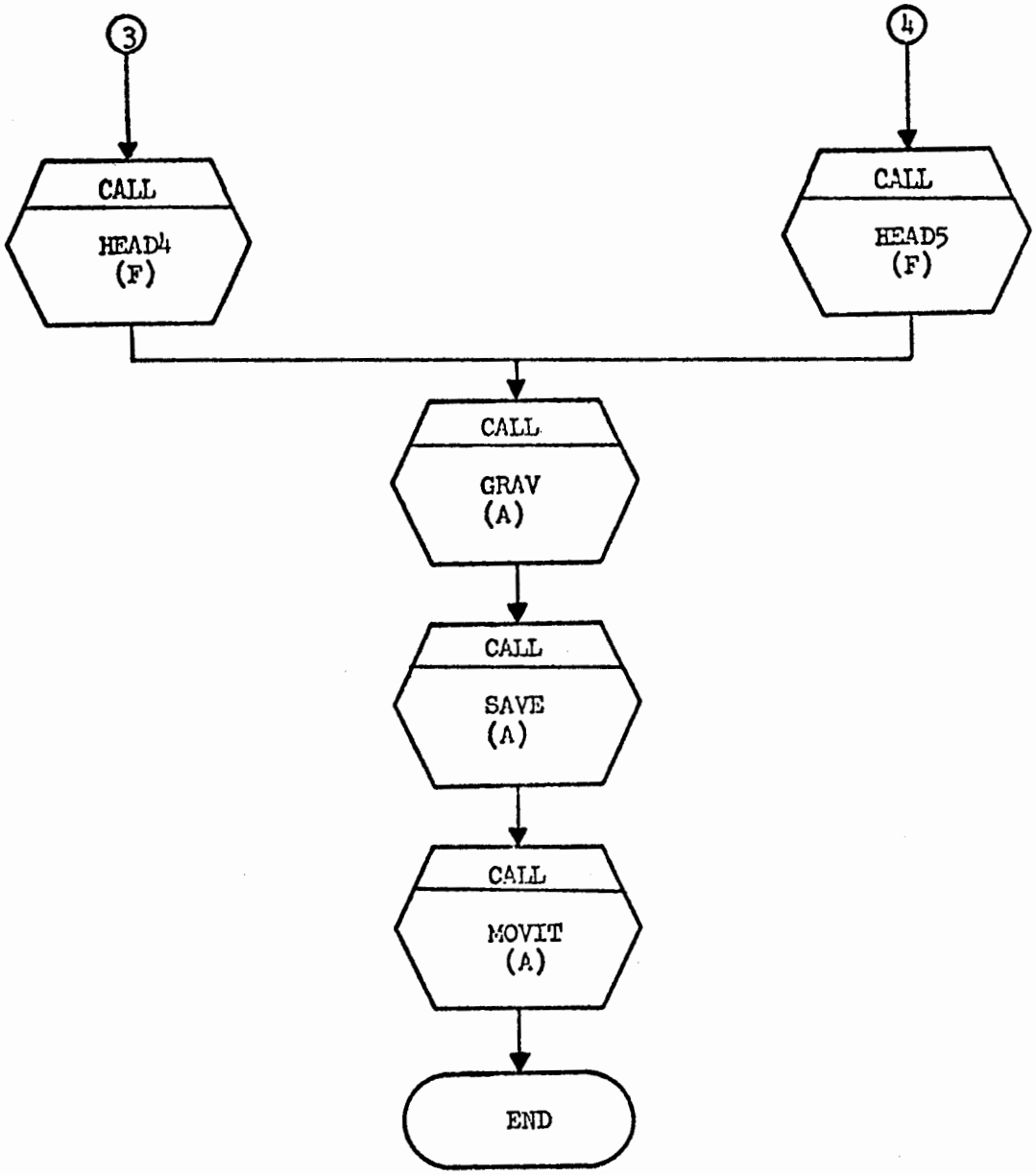

NOTE: (A) IS ASSEMBLY LANGUAGE SUBROUTINE
(F) IS FORTRAN LANGUAGE SUBROUTINE

FIGURE 5-c FLOW CHART

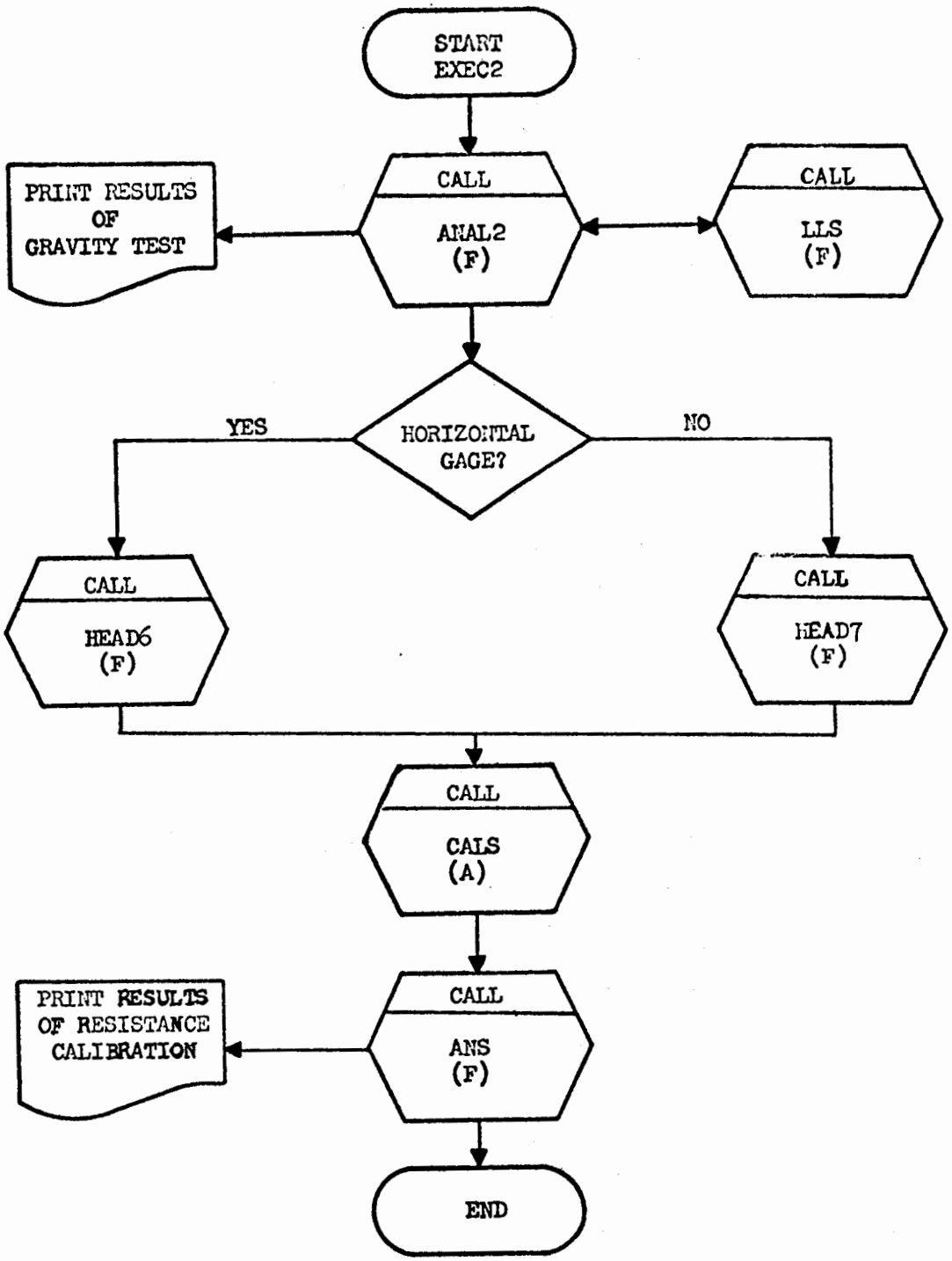

NOTE: (A) IS ASSEMBLY LANGUAGE SUBROUTINE
(F) IS FORTRAN LANGUAGE SUBROUTINE

FIGURE 6 FLOW CHART

MFR – SANDIA MODEL – BH SERIAL NO. – 672

TEMP - 78.0 VISCOSITY – 2000 PEND MATERIAL – BRASS
CARRIER VOLTAGE – 5.0 CARRIER FREQ – 6000 SYSTEM TYPE – NATEL
SET RANGE – 6.0 GAGE TYPE – HORIZONTAL DATE – 4-13-71
DAMPING FACTOR = 257.
5% FREQUENCY RESPONSE : FROM .01777 HZ to 506. HZ

BEST FIT STRAIGHT LINE THROUGH DATA AND ZERO IS

Y (VOLTS) = .091646(VOLTS/FT/SEC) X (FT/SEC)

INPUT VELOCITY (FT/SEC)	OUTPUT VOLTAGE (VOLTS)	DEVIATION FROM READING (PERCENT)	DEVIATION FROM SET RANGE (PERCENT)
5.119	.469	-.08	-.07
3.834	.350	-.50	-.32
2.549	.232	-.50	-.21
1.264	.115	-.50	-.11
.000	.000	.00	.00
-.021	-.002	-.50	-.00
-1.307	-.119	-.50	-.11
-2.592	-.236	-.50	-.22
-3.877	-.357	.60	.39
-5.162	-.475	.33	.28

NOTE: FINAL DATA POINTS ARE FOR + AND – 150% of SET RANGE.

*** CALIBRATE RESISTANCE ***

EQUIVALENT VELOCITY (FT/SEC)	CALIBRATE RESISTANCE (KOHMS)
6.0000	18.9500
6.9689	16.2000
6.7131	16.9000
6.3722	17.8000
6.0738	18.7000
5.8181	19.6000
5.5836	20.5000
5.3279	21.5000
5.1148	22.6000

FIGURE 7 FINAL PRINTOUT

*** VELOCITY GAGE CALIBRATION EXECUTIVE I ***

DATE –
4-13-71

MANUFACTURER–
SANDIA

MODEL –
BH

SERIAL NO –
672

TEMPERATURE –
78

VISCOSITY –
2000

PENDULUM MATERIAL –
BRASS

CARRIER VOLTAGE –
5.0

CARRIER FREQUENCY –
6000

SYSTEM TYPE –
NATEL

SET RANGE –
6

HORIZONTAL GAGE = 1
VERTICAL GAGE = 2

1

LOG DECREMENT TEST? YES = 1 NO = 2

1

*** LOG DECREMENT CALIBRATION ***

PLACE GAGE IN HOLDER IN A VERTICAL POSITION WITH ARROWS POINTING AWAY FROM SCREW IN HOLDER.

BALANCE THE SYSTEM TO 0.0000 VOLTS.
THE INITIAL TRANSDUCER BALANCE VOLTAGE IS .....

-.0020
STOP....TRANSUDCER IS BALANCED.
PLACE MAGNET ON GAGE...ADJUST THE OUTPUT TO 0.9961 VDC.
INITIAL TRANSDUCER OUTPUT IS ....
.9961
STOP...TRANSDUCER OUTPUT PROPERLY ADJUSTED. RELEASE MAGNET.....

FIGURE 8-a FACILITY INSTRUCTIONS

```
***   DETERMINE FULL SCALE VALUE ***

PUT GAGE IN HORIZONTAL POSITION WITH ARROWS POINTING DOWN.
PLACE MAGNET ON GAGE...ADJUST THE OUTPUT TO 0.9961 VDC.
INITIAL TRANSDUCER OUTPUT IS ....    .9961
STOP...TRANSDUCER OUTPUT PROPERLY ADJUSTED.  RELEASE MAGNET.....
YOU SPECIFIED A SET RANGE OF          6.0
FULL SCALE VALUE WITH YOUR PRESENT SETTING IS         21.20
FOR BEST RESULTS, SET RANGE SHOULD BE AT LEAST 60 PERCENT
OF FULL SCALE.

SET RANGE IS  28% OF FULL SCALE

IS FULL SCALE AND ATTENUATOR SETTING SATISFACTORY ?  YES=1     NO=2
2

PLACE MAGNET ON GAGE...ADJUST THE OUTPUT TO 0.9961 VDC.
INITIAL TRANSUDCER OUTPUT IS ....
    .9961
STOP...TRANSDUCER OUTPUT PROPERLY ADJUSTED. RELEASE MAGNET......
YOU SPECIFIED A SET RANGE OF 6.0
FULL SCALE VALUE WITH YOUR PRESENT SETTING IS         8.35
FOR BEST RESULTS, SET RANGE SHOULD BE AT LEAST 60 PERCENT
OF FULL SCALE.

SET RANGE IS       72% OF FULL SCALE.

IS FULL SCALE AND ATTENUATOR SETTING SATISFACTORY ?       YES = 1      NO = 2
1


***  GRAVITY CALIBRATION ***

PLACE GAGE IN HORIZONTAL POSITION WITH ARROWS POINTING DOWN.

PLACE MAGNET ON GAGE...ADJUST THE OUTPUT TO 0.9961 VDC.
INITIAL TRANSDUCER OUTPUT IS ....
    .9961
STOP...TRANSDUCER OUTPUT PROPERLY ADJUSTED. RELEASE MAGNET......

LOAD VELOCITY GAGE CALIBRATION EXECUTIVE II


PAUSE
```

FIGURE 8-b FACILITY INSTRUCTIONS

*** RESISTANCE CALIBRATION ***

PROCEED AS FOLLOWS:

1-PUT GAGE IN VERTICAL POSITION
2-BALANCE SYSTEM TO 0.000 VOLTS

BALANCE THE SYSTEM TO 0.0000 VOLTS.
THE INITIAL TRANSDUCER BALANCE BOLTAGE IS .....
-.0469
THE TRANSDUCER IS UNBALANCED, CONTINUE ADJUSTMENT UNTIL .0000 OBTAINED.
TYPE READ....BEGIN BALANCE ADJUST.
READ
-.0059

-.0039
STOP....TRANSDUCER IS BALANCED.
SWITCH CALIBRATION RESISTANCE INTO CIRCUIT..TYPE RUN
RUN

FIGURE 8-c FACILITY INSTRUCTIONS

A TRANSDUCER CALIBRATION FACILITY FOR DYNAMIC TESTING

BY

STANLEY G. GORDON AND ORA CLARK
THE BOEING COMPANY
AEROSPACE GROUP
KENT, WASHINGTON

A TRANSDUCER CALIBRATION FACILITY FOR DYNAMIC TESTING

INTRODUCTION

The development of missiles and aircraft in the transonic and supersonic ranges has made the reliable measurement of transient pressures of critical importance. With this goal in mind The Boeing Company has designed and built a facility for calibration of pressure transducers over a wide spectrum of frequencies and pressures. The intent of the facility is to provide a laboratory environment that closely matches the field conditions actually encountered in performance testing of new aerospace hardware. The facility utilizes three totally different devices that have overlapping performance ranges so that correlation of test data can provide credibility to apparent accuracy.

THE FACILITY PLAN

The objective of the facility is to provide testing and calibration of pressure transducers in the common dynamic environments encountered by todays aerospace hardware. At the same time it was considered desirable to have more than one testing device with at least some overlap in performance for correlating test data. A study was performed to determine what devices could meet the criteria. A band or spectrum of practical performance had to be defined. The first decision was to limit the test media to gases. Secondly, only inert gases and air would be used to allow the facility to be built and operated safely at our convenient central metrology laboratories where primary certification testing is performed on instrumentation for all Boeing projects. Thirdly, the facility would house all of the testing devices and instrumentation in the one facility.

The design of the facility and test devices was by the Boeing Facility Design Group and fabrication of the test devices by the Prototype Machine Shop.

Most dynamic pressure responses or "pressure steps" experienced in the field are limited to about 1,000 psi, however, some military application of transducers involve considerably higher pressure fluctuation. The maximum pressure step was chosen to be 5,000 psi since very few applications exceed this magnitude. The frequency response of modern transducers ranges up to about 300,000 hertz; with

resonant frequencies not occurring until 500,000 hertz and above. Faithful application is limited to about 50,000 hertz, however. The operational objective of the facility was, therefore, defined with the pressure fluctuations ranging from approximately 0 to 5,000 psi and frequencies ranging from 0 to greater than 500,000 hertz. Three testing devices were chosen to accomplish the operational objective.

The first device is a quick opening valve commonly known as a "pop tester". The pop tester is a device that utilizes a rapidly opening valve with a pressure differential across it. The chambers on each side of the valve are closed but arranged so that after the valve is opened the pressure rapidly equalizes. This device produces two characteristics of interest for transducer testing. The first phenomenon that occurs as the valve opens is a rapid increase in pressure on one side of the valve with a corresponding decrease on the other. The percentage of increase-decrease in pressure is, of course, equal to the ratio of the volume on each side of the valve. The second event of interest is the steady state equalibrium pressure following the dynamic pressure "step". The static pressure is a very reliable absolute reference. In order to eliminate volume ratio calculations in each calibration test and to eliminate significant pressure ratio variations during transient flow, the volume ratio is generally very large. The chamber containing the test transducer is normally very small so it may be subjected to a large pressure "step".

The second device is a shock tube. Shock tubes have been used extensively over the years to mechanically produce shock waves for laboratory study. The chief advantage of the shock tube is the ability to produce pressure steps that occur in the nanosecond range. This step occurs in the end wall of the closed tube when the shock wave arrives. Commonly, a shock tube is composed of two tubes separated by a plate or diaphram. A pressure differential is developed across the diaphram which eventually bursts or is mechanically broken. The rapid expansion of the high pressure gas into the low pressure gas produces the shock wave.

The third device chosen for the facility is an inlet modulated sinusoidal pressure generator. The device was recently developed by Richard E. Robinson of Battelle for NASA as an outgrowth of a concept by C. L. Carwile at Princeton University in 1962. An inlet modulated sinusoidal pressure generator produces pressure oscillation by controlling the gas flow into and out of a small chamber. The control of

the gas entering the chamber is accomplished by varying the inlet area of convergent divergent nozzle. The outlet is a fixed area convergent divergent nozzle. The varying inlet principle utilizes convergent cone shaped perforations evenly spaced on a rotating disk passing in front of a fixed divergent nozzle that enters into the test chamber. As the perforated disk rotates, the orifice is alternately opened and closed. The opening and closing of the orifice causes the test chamber to fill and empty as a function of the speed of rotation and the ratios of the areas of the inlet to outlet orifices. The magnitude of the average chamber pressure and the peak to peak pressure fluctuations are a function of inlet and outlet pressures.

Full utilization of three calibration devices requires relative ease of operation and data acquisition. The decision was made to house all of the testing devices and instrumentation in a common facility. To aid the operation and data acquisition processes, all gas controls, calibration device functions and data acquisition functions are located in a central control console serving all three devices. This concept allowed the use of common primary standard pressure and temperature gauges as well as integral use of instrumentation for economy and ease of test correlation.

THE POP TESTER

The first device designed and built for the facility was the pop tester. It has the ability to produce low to moderate time developed steps or equivalent frequencies with very high pressure gradients. The unit conceived for this facility will produce pressure steps from approximately 0 to 5,000 psi with rise times in the 50 - 100 microsecond range using the low atomic weight gases. This performance can be realized by the use of a device that exhibits near zero inertia and friction during the opening process. To accomplish this, the quick opening valve required the benefit of a rapidly increasing opening force, in this case in-rush pressure, and the effect of an impact force that could produce opening forces an order of magnitude greater than closing forces. The design utilized the above principles to produce the desired result.

The primary concern was the pressure seal on the valve stem between the valve seat and the opening mechanism. The problem was finally overcome by not using a seal; but by placing the valve opening device and the valve seat in a common chamber. Thus, all of the mechanism is subjected to the test differential pressures. The design incorporated an impact device that works in the test pressures and a convenient method for externally triggering the device. The design evolved to the physical geometry of a cylindrical pressure vessel with the valve seat stem and activation device totally internal. The method of unseating the valve was addressed. Triggering the unseating sequence was accomplished by using a steel weight that could drop down the valve stem to an impact plate at the bottom. The steel weight is held at the upper pressure head by an electromagnet which is incorporated as part of the pressure head. The weight drops eighteen inches when the magnet is de-energized. After the weight has fallen, it is returned to the upper pressure head by inverting the entire device on a rotating fixture. The magnet is turned back on and the vessel is pressurized. When the vessel is righted the pressure differential across the valve keeps it closed. The minimum pressure differential to effect a closure is about 5 psi which is sufficient to offset the weight of the valve. Thus, the effective lower limit of the test pressure step is 5 psi.

The impact of the weight on the valve stem impact plate produces extremely high acceleration forces in the valve shaft. To reduce the transmission of these forces to the upper valve head where test transducers are mounted, a shock absorber is employed under the impact plate. The shock absorber is a two part device which consists of a rubber cushion to eliminate a metal to metal path and a chamber filled with lead shot to reduce rebound of the valve shaft.

The upper pressure head is high strength steel that has fairly good magnetic properties. The drop weight is made from a good magnetic steel and slides on the valve shaft on a low friction ball bushing. The valve shaft is high carbon steel with a ground finish to provide concentricity and low friction characteristics for the ball bushing. The valve head is attached on the end of the valve shaft with precision threads. Several valve heads were fabricated from two different materials and were hand lapped into the valve seat. The nylon valve heads are utilized for pressures up to 800 psi and brass valve heads up to 5,000 psi. The cylindrical pressure vessel is made from non-magnetic

QUICK OPENING VALVE "POP TESTER" CUT AWAY DIAGRAM

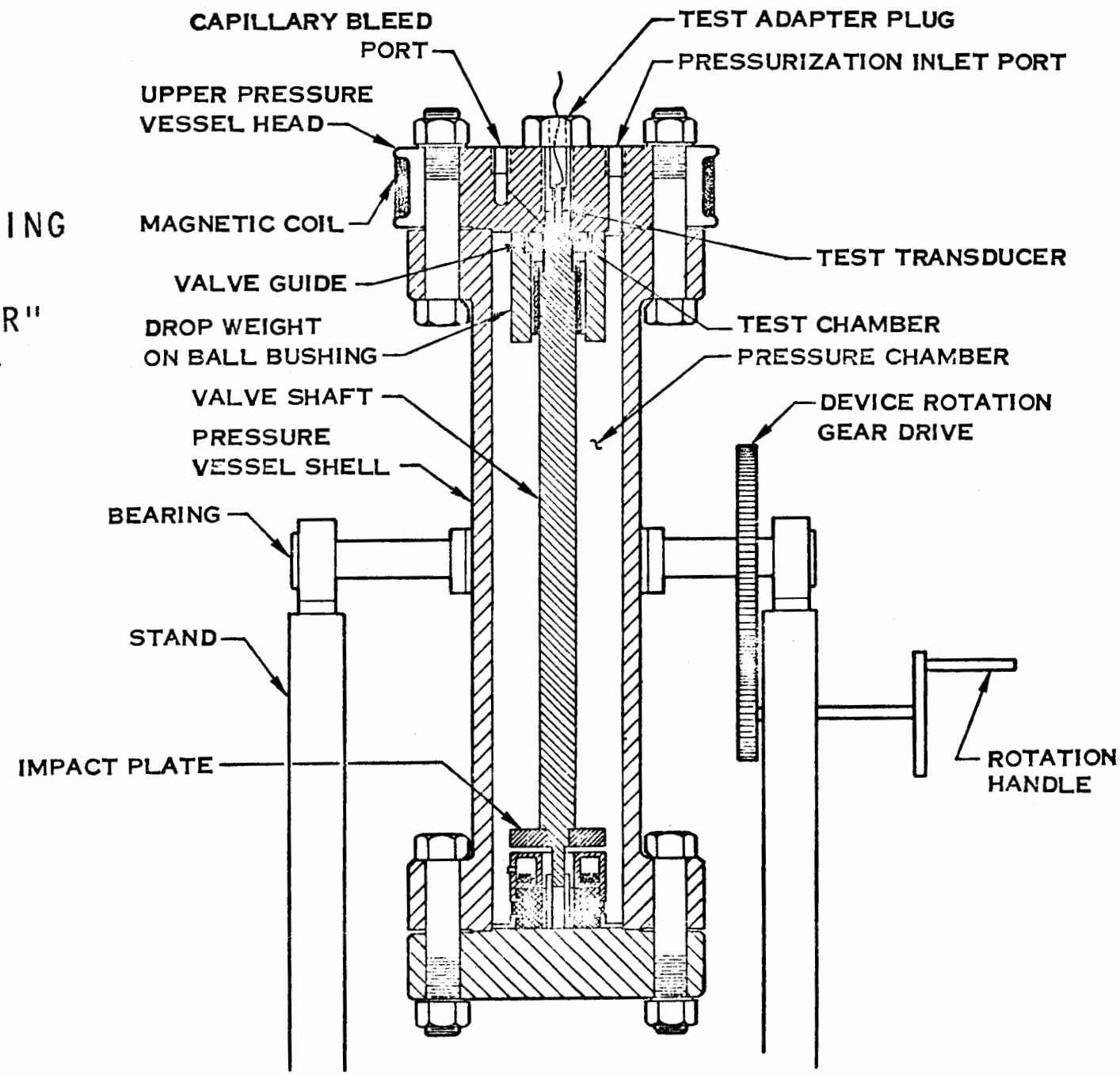

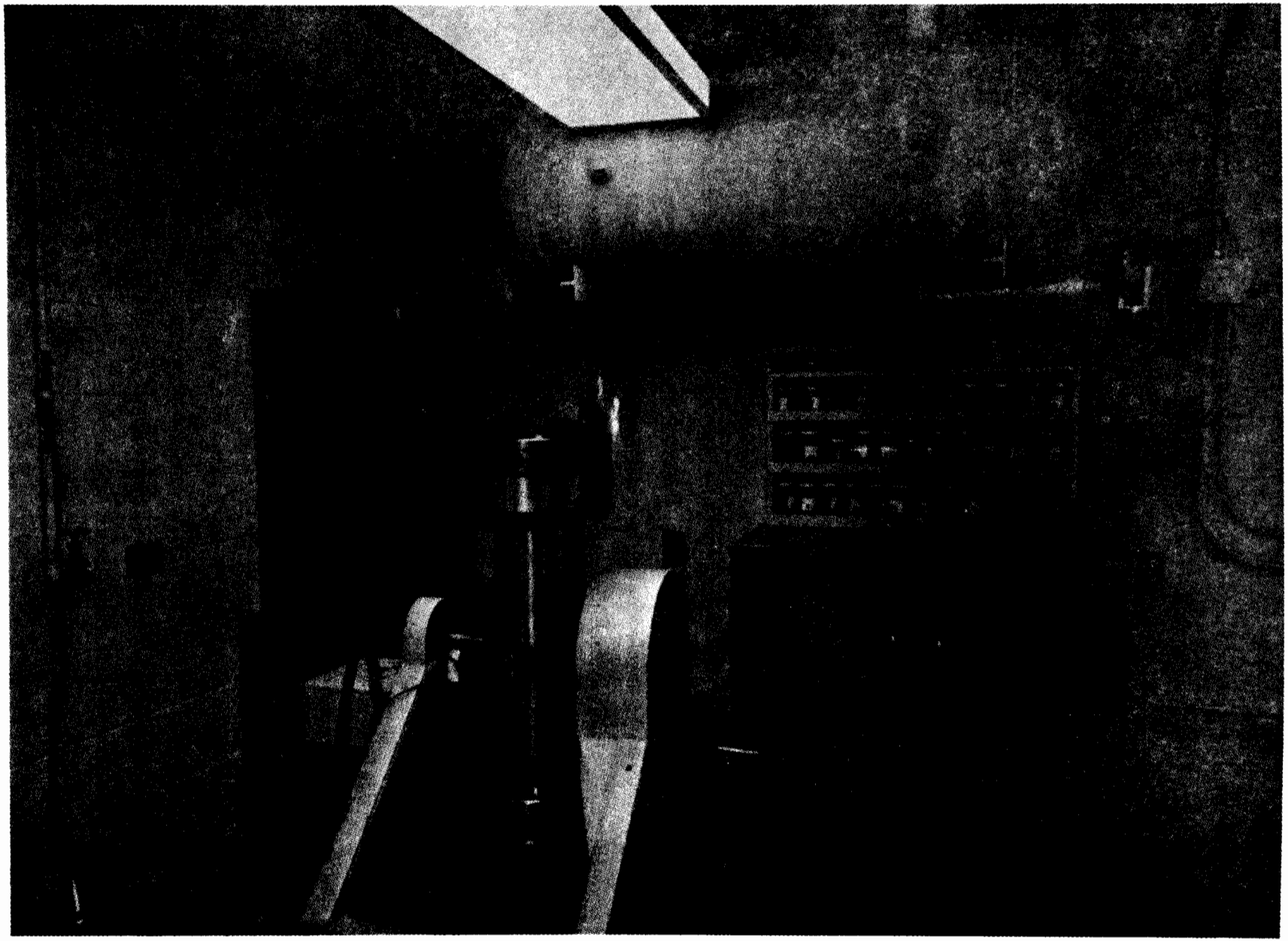

QUICK OPENING VALVE

stainless steel so as not to become part of the magnetic circuit. The lower pressure head is high strength steel and both the upper and lower heads are attached with high strength bolts.

The pressure vessel has a volume of about 5,000 times the test chamber. Thus, when the valve is opened the pressure in the vessel decreases by 1/5000, which is considered a negligible amount. The vessel internally is about twenty-four inches long and six inches in diameter. The test chamber above the valve head is one and one-fourth inches in diameter and .050" deep. The overall concept produces clean pressure steps with a minimum of signal distortion.

THE SHOCK TUBE

The shock tube was incorporated into the facility to produce moderate pressure steps at medium to high frequencies. As commonly known, the shock tube utilizes the rupture of a diaphram between a high and low pressure to produce a shock wave in the low pressure region. The shock tube envisioned for the Boeing facility required the development of very clean or non-distorted shock waves which would faithfully match theoretical data. Also, a reasonable amount of steady state pressure would be required after passing of the shock front for an absolute pressure reference. The tube was designed with a thirteen foot driver and a fourteen foot driven section for a twenty-seven foot overall length. This configuration produces steady state pressures after shock arrival at the measuring section in the side wall of two to six milli-seconds. The quality of the shock wave for side wall testing was assured with constant cross sections and controlling surface finishes in the driven tube to ten micro-inches/inch and waviness to .001 inches in two inches. Also, discontinuities were controlled to .0005 inches including mating surfaces of test transducers. The only practical way to accomplish the discontinuity requirement was to use a square cross section so transducers would not have to mate with a round wall. The cross section settled on was three inches high by two inches wide. This geometry allowed testing of one-half inch diameter transducers with negligible edge effects. The rectangular cross section, however, required an inefficient structural design which added greatly to the expense of the device.

The driver tube was made from 17-4 PH stainless steel to provide for a cleanable and durable interior surface finish. In addition, the stainless steel chosen was a magnetic variety which allowed magnetic chucking of the work pieces for finish grinding. The tube sections were bolted and seals were developed with linear o-rings and silicon end seals. Sealing at flanged end sections and diaphram stations is accomplished with o-rings.

The shock tube is set up to use single and double diaphrams with a variety of diaphram rupturing techniques. The simplest diaphram breaking method is to over pressure the diaphram to bursting. The chief draw back of this method is determination of precise driver pressure and temperature at the moment of diaphram rupture. The second method of diaphram rupture is by a rotary knife which is activated by a pneumatic cylinder for remote test control. This method allows precise driver and driven tube chamber temperature and pressure measurements prior to diaphram rupture. The method however limits diaphrams to soft membranes that are easily cut by a metallic knife. Diaphrams normally used are made from cellophane and mylar and vary in thickness from .005" to .020". Generally, the .005" cellophane is good for 50 psi per layer without excessive premature failure. The third method is the dual diaphram technique which is quite effective for precise diaphram rupture at high differential pressures. This method allows controlled metal diaphram bursting by sudden extreme overpressure. The technique is accomplished by pressuring the chamber between the two diaphrams to below the burst pressure of each diaphram. The driver and driven chambers are then pressurized to desired values. The chamber between diaphrams is then vented to atmosphere and the resultant pressure across the diaphram adjoining the driver tube is over pressured resulting in rupture. The downstream or diaphram next to the driven tube is then exposed to the upstream pressure which causes rupture and the resultant shock wave.

Opening of the diaphram station and the driver tube end flange is by pneumatic cylinders for ease of operation. The two openings are secured by pneumatic cylinders with 90 degree indexing dogs. The diaphram station is made accessible

SHOCK TUBE
Schematic Diagram

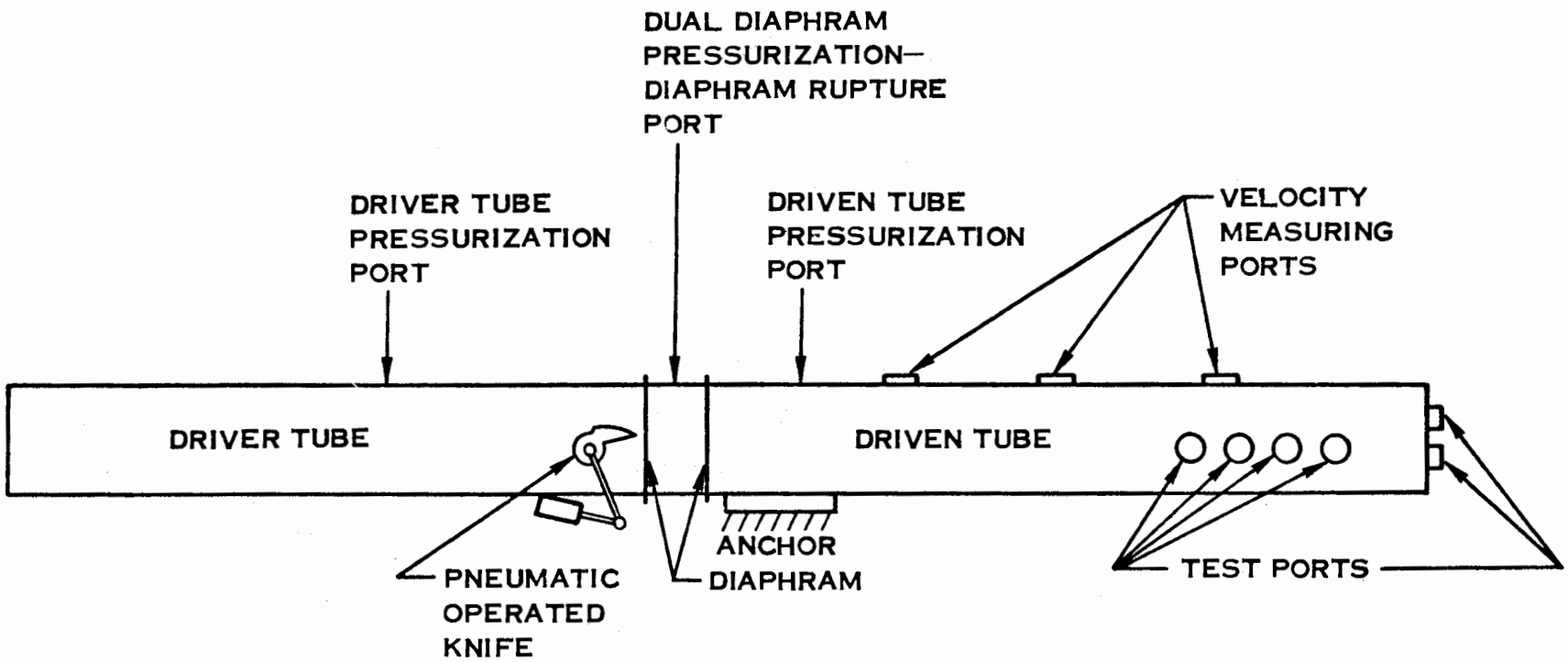

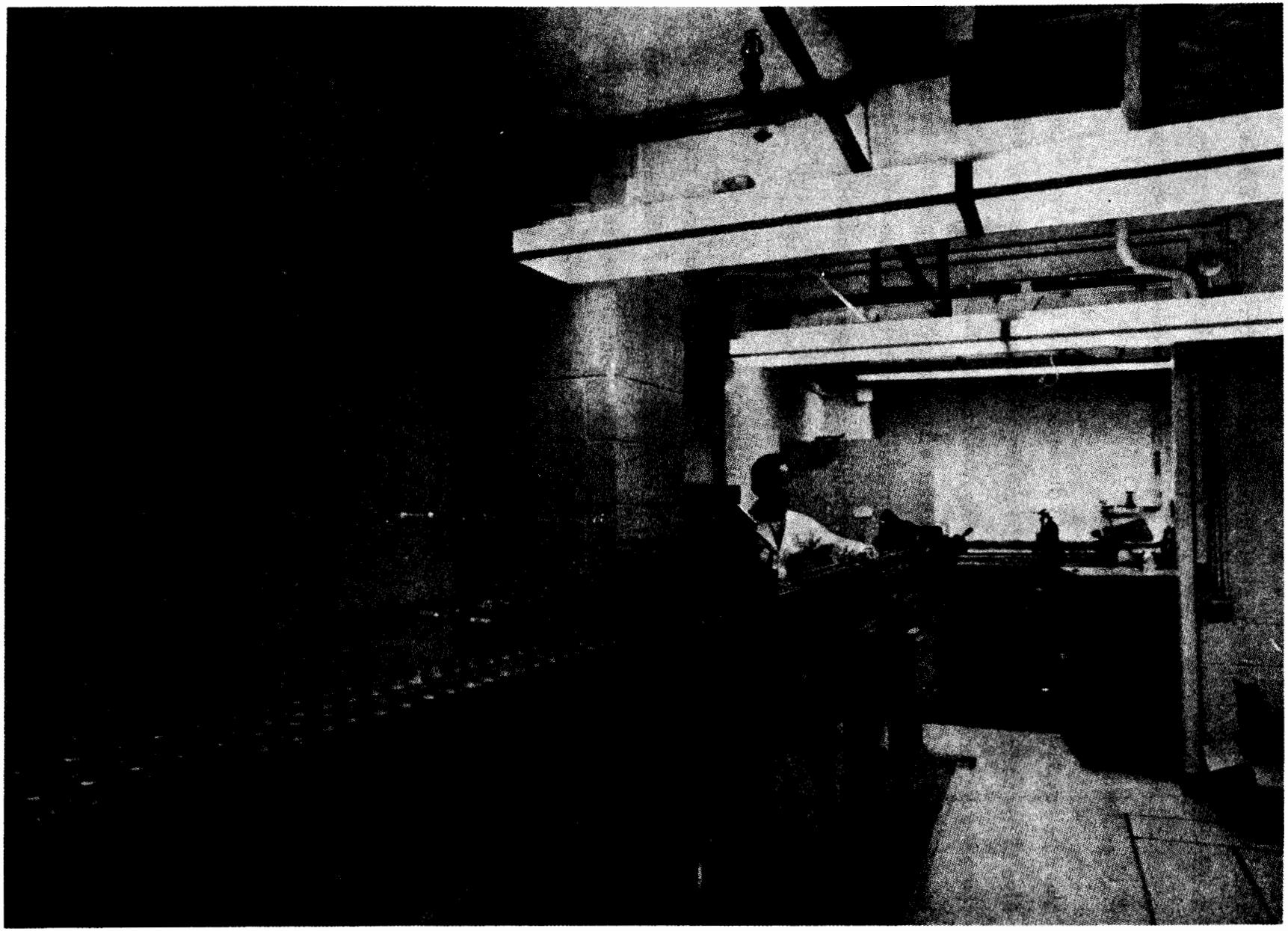

SHOCK TUBE

by moving the driver tube away from the driven tube on rollers. The only anchored point on the tube is at the driven tube diaphram station. This is to allow freedom of movement of the tube under dynamic shock with roller horizontal and vertical constraints. The roller constraints also act as alignment guides.

The tube has 31 test ports one inch in diameter for test transducer mounting. Five of the ports are on the site of the driven tube at one foot intervals. These test ports are for the velocity measuring transducers. The velocity measuring transducers trigger time internal circuits. Also, two of the test ports are in the driven tube end wall where resonant transducer excitation can be accomplished. The shock tube is mounted on a heavy tubular steel frame on a monolithic concrete foundation. This assures precise alignment.

THE SINUSOIDAL PRESSURE GENERATOR (SPG)

The final link in the test spectrum was to provide a device that could produce low to moderate dynamic pressures with moderate frequencies. The device chosen was the sinusoidal pressure generator which is in direct contrast to the two previous devices because it produces a continuing test chamber pressure variation in the form of an approximated sine wave. The SPG is an inlet modulated siren type device. The gas flow into the test chamber is modulated using a perforated disk with the perforations in the form of convergent nozzles. The geometry of the disk is such that on the inlet side the nozzles just touch and on the orifice side the nozzles are spaced such that the distance between nozzles equals the nozzle diameter. This arrangement allows for a non-interrupted opening and closing of the flow passage to approximate a sine wave. The disk nozzles line up with a fixed divergent nozzle that expands into the test chamber. The rotation of the perforated disk opens the flow passage from full closed to full open and back to full closed. The theoretical flow closely approximates a sine curve volumewise if up and downstream gas pressures are constant and the flow is critical. A better approximation of a true sine wave would be a square inlet orifice into the test chamber but fabrication of such a nozzle would be difficult and the distortion quite possibly would be greater than the theoretical benefit due to edge effects.

The operation of the device is very easily defined mathematically when the inlet to chamber pressure is sufficient so that the flow through the opening and closing nozzle is critical. Thus, the mass flow for a given orifice area is constant. The varying inlet area, therefore, produces a variable mass flow approximating a sine function. The production of a predictable pressure downstream of the variable inlet orifice requires that the gas be expanded into a finite chamber with a restricted outlet. To avoid degredation of the entering shock wave, the chamber dimensions must be less than the wave length of the propagating sine wave or distortion will occur in the form of N or sawtooth waves. The outlet restriction is also a convergent divergent nozzle that is of fixed geometry. Therefore, the exit flow is also critical. The complete mathematical model is well defined by the following equation:

$$(1) \qquad \frac{Pi}{Pc} = \frac{1}{P} = \frac{Ae}{Ai/2} = \frac{d^2e}{di/2}$$

Where Pi = absolute inlet pressure
Pc = absolute average chamber pressure
de = exit nozzle diameter
di = inlet nozzle diameter

$$(2) \qquad \frac{\tilde{P}\,amp}{\bar{P}} = \frac{\tilde{A}\,i(amp)}{\left(Ae^2 + \frac{W^2}{\eta^2}\right)^{1/2} \bar{A}i/Ae} = \frac{Ai\ (amp)}{\left(1 + \frac{W^2}{Ae^2\eta}\right)^{1/2} \bar{A}i}$$

Where $\tilde{P}$ amp = peak to peak pressure variation
$\bar{P}$ = average chamber or bias pressure
$\tilde{A}$i amp = the variable inlet nozzle area
Ae = the fixed exit nozzle area
Ai = the average inlet nozzle area
W = frequency
η = gas constant = $(g_c \gamma R T_o)^{1/2}$

The peak to peak chamber variation pressure to average chamber pressure is shown to be frequency dependent by the above equations. The peak to peak pressure varies from approximately 180% at 10 Hz to 18% at 15,000 Hz under laboratory test conditions. The quality of the sine wave above 10,000 Hz was better than expected. However, a further improvement may result from experimenting with porous materials in the test

chamber in an effort to reduce distortion believed to be caused by shock fronts traveling across the chamber.

It should be noted that gas separation can occur if divergent nozzles exceed 30 degrees which invalidates the above equations. The device designed at Boeing has a 22 degree divergent nozzle which is a good, efficient nozzle. The chamber was kept as small as possible to allow the highest frequency operation. It was decided that one-half inch diameter maximum transducers would be tested. Thus, the chamber was set at one-half inch diameter. Since the sine function is a filling and emptying phenomenon the width of the chamber must be such that it does not limit the design. An aspect ratio of 2:1 is about ideal so the chamber width was set at one-fourth inch. A chamber diameter of one-half inch provides a theoretical frequency capability of 16,000 Hz with helium at ambient temperature with a theoretical accuracy of 5%. The basic inlet pressure to chamber pressure ratio was chosen at 5.0. This ratio can be changed by use of secondary inlets (at inlet nozzle pressure) or secondary outlets to atmosphere. The ratio's vary from 2.0 to 8.0.

The capability of low and high temperature testing was required by the supersonic transport program for engine inlet calibration. The SST program required accurate testing of transducers from -65 degree F to + 580 degree F. The SPG fulfilled the pressure and frequency spectrum of the program so it was decided to add variable temperature to the test capability. Low temperature testing is accomplished by precooling the incoming gas with CO_2 and cooling the SPG with direct CO_2 injection into the SPG case. Heating is provided by an electric heat exchanger to preheating inlet gases and electrical strip heaters on the SPG case.

The SST was to operate at very low absolute pressures (70,000 foot altitude) so testing at partial atmospheric pressures was essential. A vacuum pump was installed and connected to the exit nozzle of the SPG. With the vacuum pump operating at 28 inches of mercury the SPG can be operated at about one and one-half psi absolute average chamber pressure. The exhaust of the SPG is through a vacuum tank-heat exchanger. The vacuum tank also serves as a heat exchanger so the exhaust gases can be cooled before entering the vacuum pump when the SPG is operated at high temperatures.

SINUSOIDAL PRESSURE GENERATOR

Cutaway Cross Section

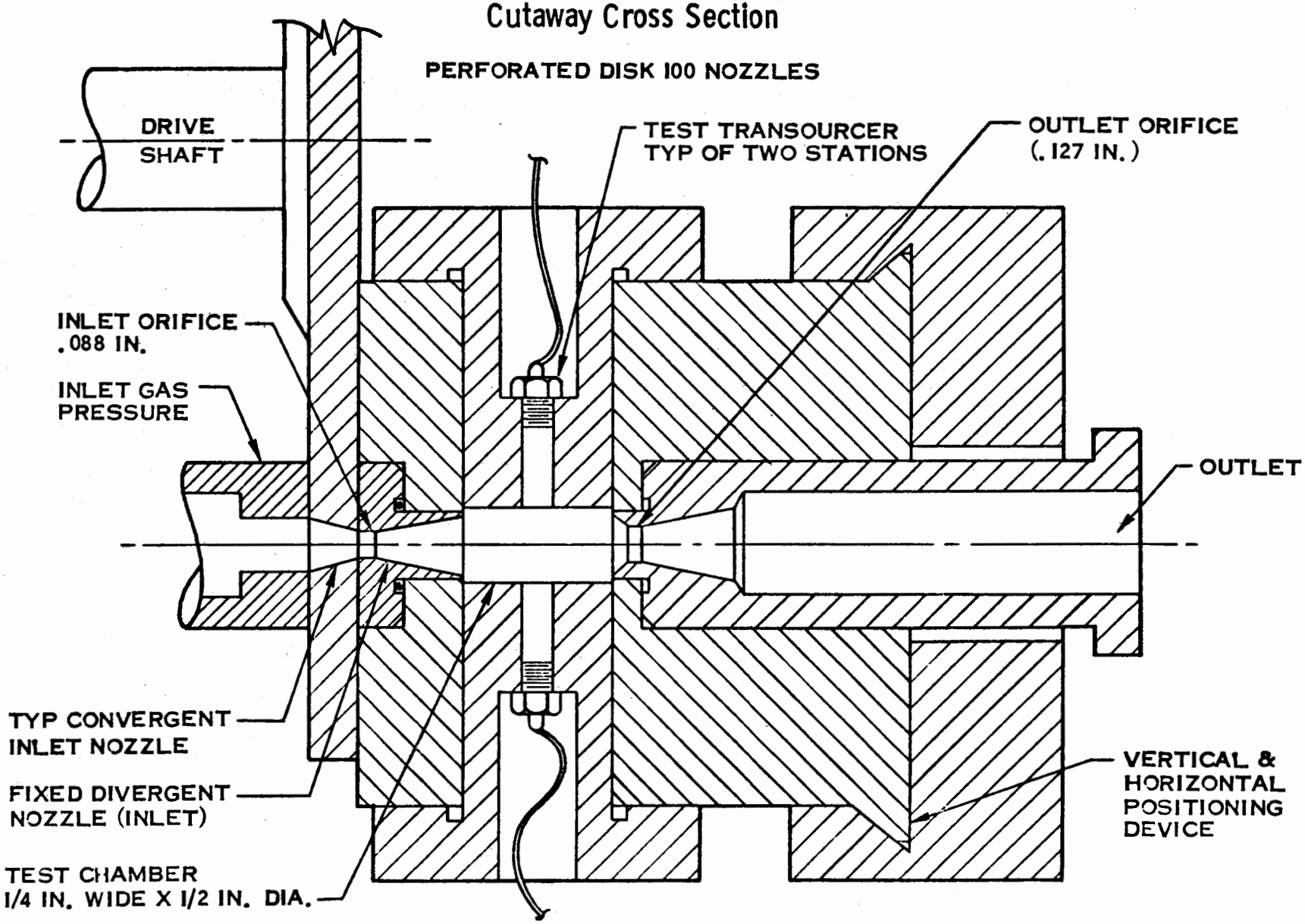

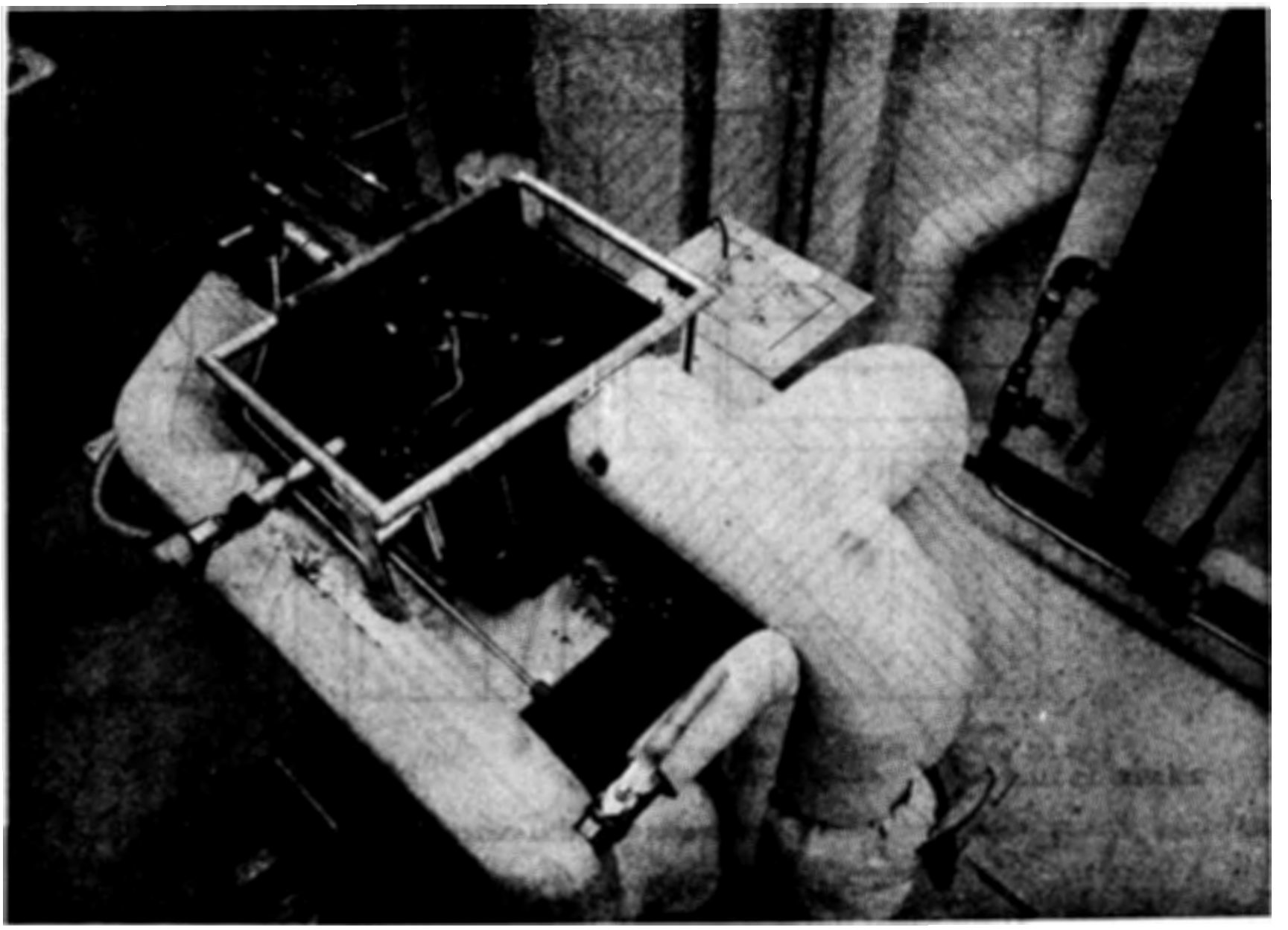

SINUSOIDAL PRESSURE GENERATOR

CENTRAL CONTROL CONSOLE

Efficient facility operation and data acquisition required the assemblage of all devices in a common location with centralized control and instrumentation. The central control console was designed and built by Boeing to house all of the testing device control functions, pneumatic valving, and common instrumentation. Pressurization gas to the pop tester is metered from the console and the capillary bleed tube is valved from the console. The magnetic pressure head is also energized from the console. The rotation of the pop tester for starting a new cycle is a manual operation at the test device itself. The shock tube driver and driven sections are pressurized and bled from the console. The pneumatic cyclinder locking device is also activated from the console with safety interlocks. The shock tube can be fired by dual diaphram depressurization bleed and by a rotating knife which is pneumatically operated. Both methods are controlled from the console. The installation of diaphrams, tube cleaning and indexing of the locking device at the flanged closure stations is manual. The SPG inlet gas is controlled from the console through two pressure regulating valves - one for high (to 1500 psi) one for low (to 100 psi) pressure. The gas can be diverted through a CO_2 low temperature heat exchanger or an electric high temperature heat exchanger. The temperature is controlled by a separate indicating control panel which is wall mounted behind the central control console. The exhaust of the SPG is ducted out of the building through a conventional automobile muffler to reduce the noise level which can reach 160 db. The exhaust can be manually diverted through a vacuum pump for low pressure testing.

The pressure delivered to each test device is measured by one of three Seegers primary pressure gauges. The gauges are selected to indicate ranges of 0 to 100 psi absolute, 0 to 500 psi absolute and 0 to 5000 absolute. The gauges are protected with relief valves. The gauge range to be used is selected by a pushbutton which lights up upon activation. All three testing devices feed data to three dual trace storage scopes with sweep speeds of 2 sec/cm - 5 ns/cm and a rise time of 7 ns. The storage scopes offer correlation from one test to the next.

Test data is collected with a patchboard system with 31 data points at the central control console, 21 at the shock tube, 6 at the SPG and 4 at the pop tester. The data patching is by coaxial cable to eliminate the extraneous distortion. The connectors are twist lock type. Primary test data from test transducers and instrumentation is conveyed over this sytem. The shock tube calibration is critically dependent upon driven tube gas temperature. The temperature is measured with a thermistor temperature gauge which is accurate $\pm$ .20 degree centigrade. As previously mentioned the speed of the shock wave into two driven chambers is measured by transducer stations. Three transducers are used at either one or two foot intervals. The transducers have an effective face activation area of .10 inch which provides a measurement of the speed of the shock wave to better than 1% with 95% confidence factor.

The SPG inlet pressure can be measured by two methods (1) Seegers pressure gauge and (2) by an inlet transducer mounted in the inlet pressure tube or plenum. The SPG frequency is measured by a magnetic pick-up which counts the teeth on an external gear. This method affords very high accuracy of frequency with display on one of the three electronic counters. This method has proven reliable to 20,000Hz, which is beyond the effective testing range of the SPG. SPG rotation speed is controlled from the console through a rheostat which controls a variable speed 2 horsepower SCR driven motor with gear belt drive. Temperature control and indication is by a panel that is wall mounted behind the central control console. The panel has indicating controllers with adjustable setpoints for inlet gas flow low temperature, SPG low temperature, inlet gas high temperature, SPG high temperature and SPG body high temperature control. The outlet vacuum pressure of the SPG is manually controlled and monitored. The control console has three electronic counters for shock speed measurement of the shock tube and frequency readout of the SPG.

DYNAMIC CALIBRATION FACILITY

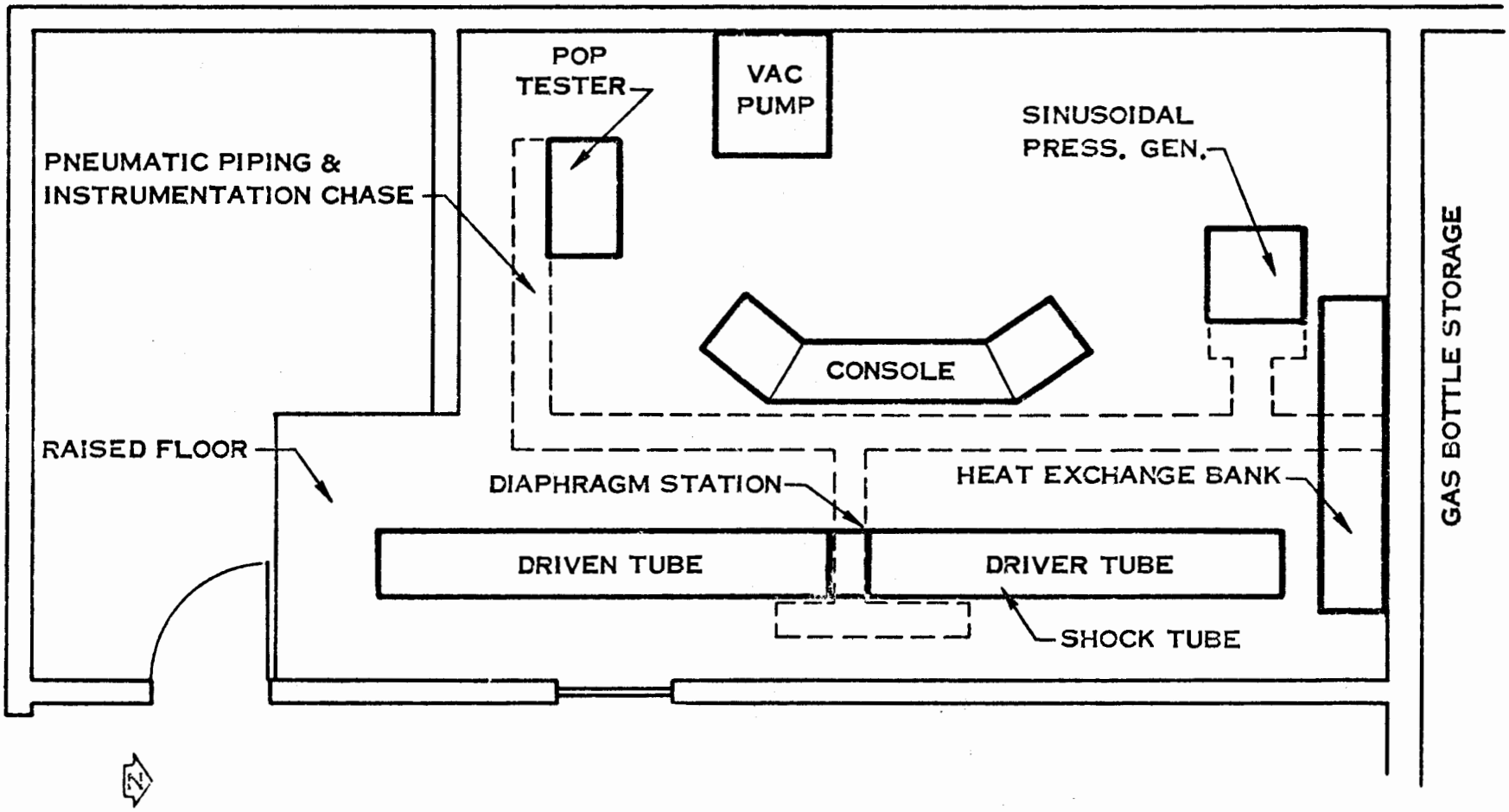

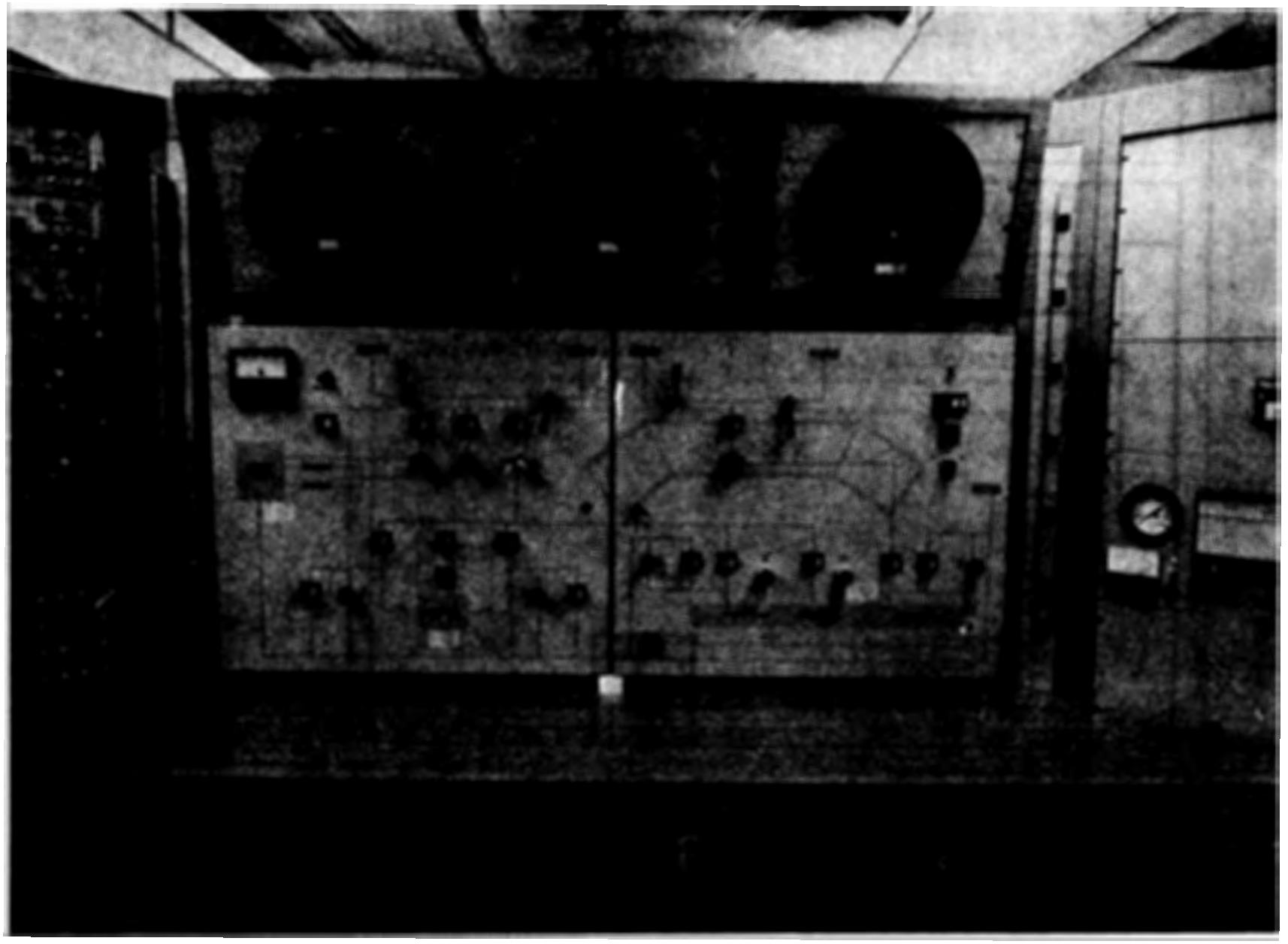

CONTROL CONSOLE

SUMMARY OF FACILITY CAPABILITIES

POP TESTER

Static pressure range	0 - 5000 psi
Step pressure range	5 - 5000 psi
Frequency range	0 - 5000 Hz *

* Rise time is approximately 50μs for He
Test transducer size 1/2 inch maximum

SHOCK TUBE

Static pressure range	10 - 1000 psi
Step pressure range	2 - 1000 psi
Frequency range	200 - 30,000 Hz *

* Rise time less than 1/nano sec. in the end wall
Test transducer size 1.0 inch maximum

SINUSOIDAL PRESSURE GENERATOR

Static (bias) pressure range	1 - 700 psia
Dynamic pressure range (peak to peak)	.5 - 500 psia
Temperature range	- 65 degree to + 600 degree F
Frequency range	1 to 15,000 Hz

Test transducer size 1/2 inch maximum

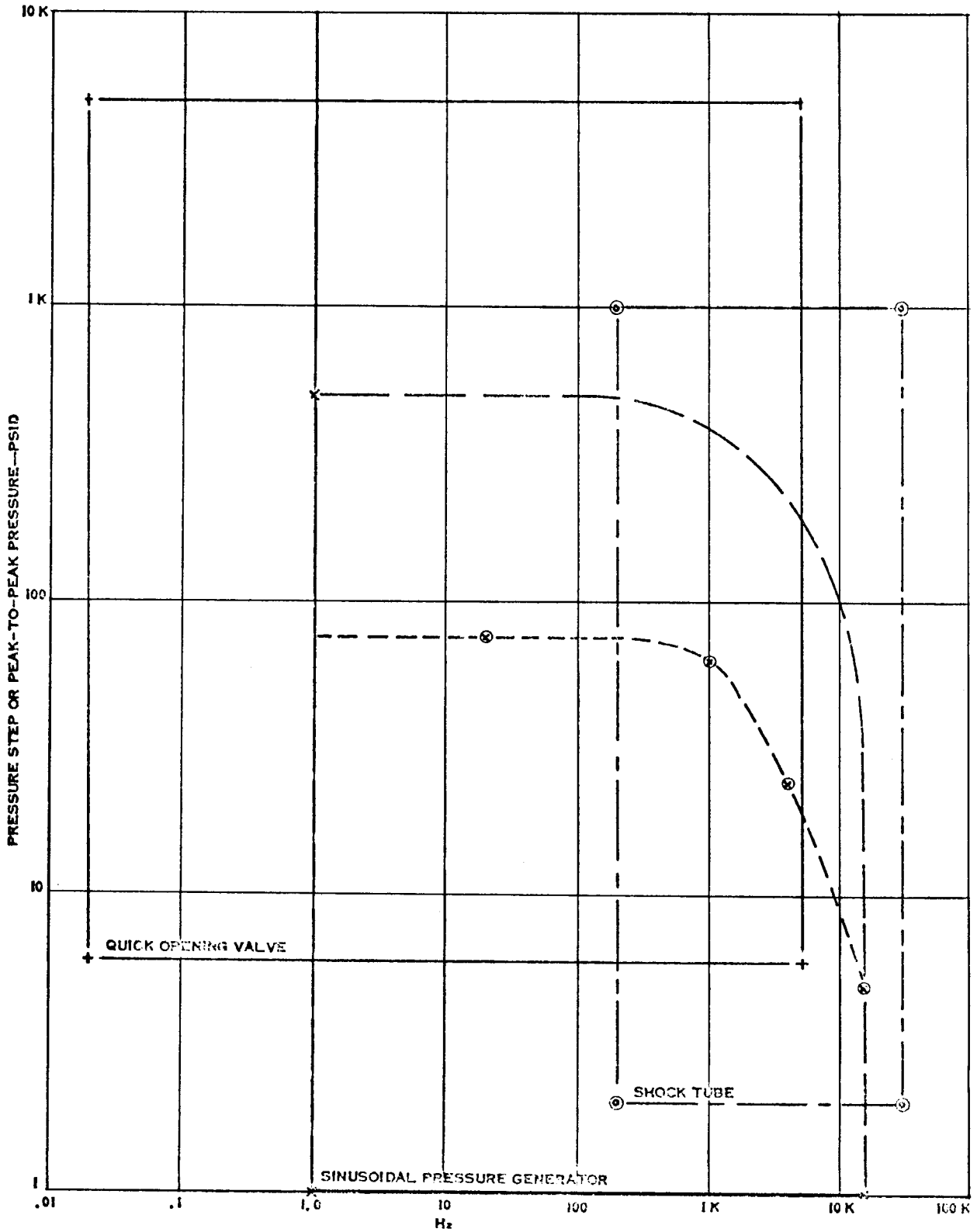

COMPARATIVE CAPABILITIES OF QUICK OPENING VALVE, SHOCK TUBE AND SINUSOIDAL PRESSURE GENERATOR

TEST INSTRUMENTATION

OSCILLOSCOPES

1 - Hewlett Packard 180A dual channel

2 - Hewlett Packard 181A dual channel storage scope

ELECTRONIC COUNTERS

3 - Eldorado model 1410 electronic counters 0.1 μs dual input

PRIMARY PRESSURE GAUGES

Seegers precision pressure transfer standard model S/N

0 - 200 psi absolute .2 psia subdivisions

0 - 1000 psi absolute 1 psia subdivisions

0 - 3000 psi absolute 5 psia subdivisions

DIGITAL TEMPERATURE GAUGES

Digitec $\pm$ 0.15 degree centrigrade 15 - 35 degree centrigrade range

4 probe

FM TAPE RECORDER

Ampex FR 1300

PRESSURE GAUGE

Mensor quartz manometer

CONCLUSION

Since installation of the facility, test time available has been minimal resulting in the fact that little correlation data as yet exists. Use of the facility, however, has revealed several items of general interest.

As previously stated, the design goal for the pop tester was to provide a pressure step rise time of the order of 100 micro-seconds. Tests have shown that the device described previously provides rise times of the order of 40 - 90 micro-seconds, depending on the pressure levels under consideration. These rise times thus permit transducer response through a frequency spectrum to 4,000 to 5,000 Hz.

Attempts to correlate the shock tube and pop tester have resulted in partial success only. Further testing has shown that many pressure transducers have characteristics that make them excellent dynamic temperature transducers also.

Since the temperature rise across the shock front is considerable, of the order of 400 degree centigrade at a pressure ratio of 7:1, it becomes difficult to sort out that portion of the output signal due to pressure and that due to temperature. This temperature transient has been found to have effects ranging from decreasing the output signal due to a pressure step by 50% in five milliseconds to an increase of about 10% for various manufacturers and models. In going through manufacturers literature, no statement regarding this characteristic has been found. In fact, in one case the manufacturers literature very adroitly and neatly sidesteps and skirts around the characteristic in such a manner as to lead the reader to believe that no such characteristic occurs.

Pressure transducers having a face diameter of .1" diameter are used to measure the velocity of the shock wave as it travels the length of the driven tube. Three transducers are used for this purpose, spaced one foot apart down the length of the driven tube. Two electronic timers are used to measure the shock wave velocity over successive one foot intervals while the third measures the velocity over the total two foot distance. It has been of interest to note that the three time readings thus obtained have consistently been in agreement within a few tenths of a microseconds.

The sensitivity of the transducer is defined to be the Fourier transform of the transducer response to the calibration source, divided by the mathematical transform of an ideal input. The reduction of data is limited by the FM tape sampling rate to 30,000 Hz.

REFERENCES

1. R. E. Robinson, "Development of a Sinusoidal Pressure Generator for Pressure Transducer Dynamic Calibration", NASA CR - 72656 (March 25, 1970).

2. P. S. Lederer, "Methods for Performance Testing of Electromechanical Pressure Transducers", NBS Note 411 (February 9, 1967).

3. J. D. Favour, "Primary Calibration of Pressure Transducers to 10,000 Hz", The Boeing Company.

4. Glass I.I. Patterson G. M., " A Theoretical and Experimental Study of Shock Tube Stovo", Journal of the Aeronautical Sciences, Vol. 22, No. 2, February 1955.

5. A. Hertzberg, "A Shock Tube Method of Generating Hypersonic Flows", Cornell Aeronautical Laboratory, Inc.

TRANSIENT TECHNIQUE FOR CALIBRATING FINE-WIRE THERMOCOUPLES AT HIGH TEMPERATURES

BY

Edward G. Keshock

Old Dominion University

and

William F. Stewart

S. Franklin Edwards

NASA, Langley Research Center

Presented at

The Seventh Transducer Workshop

Albuquerque, New Mexico

April 4-6, 1972

NASA - Langley

TRANSIENT TECHNIQUE FOR CALIBRATING FINE-WIRE THERMOCOUPLES AT HIGH TEMPERATURES

By Edward G. Keshock*
and
William F. Stewart and S. Franklin Edwards**

A new transient technique for calibrating fine-wire thermocouples (.001 in.) up to temperatures of about 2500°F was developed and preliminary experimental tests and analyses were performed. The technique consisted of attaching the test thermocouple and a reference thermocouple (0.010 in.) to a horizontal heater wire (0.020 in.) at essentially a single junction. While the heater wire is being electrically heated to about 2500°F within a 6-8 second period, the output of the two thermocouples is automatically recorded. The calibration wire-thermocouple assembly is rather compact and may conveniently be located within a controlled atmosphere enclosure, such that testing may be performed in various gaseous atmospheres under vacuum conditions. The principal advantage of this transient technique is the avoidance of severe reduction of thermocouple performance that ordinarily would result from calibration in an oxidizing atmosphere for an extended period of time at elevated temperatures. Distortion of the heater wire time-temperature distribution due to the presence of the thermocouple junctions has been investigated; the distortion appears to be minimal. A second factor influencing the accuracy of the calibration technique that requires further investigation is the relative response characteristics of the reference and test thermocouples.

INTRODUCTION

The motivation for this study was provided by the need to obtain turbulent heat transfer data during atmospheric re-entry of a research spacecraft. Because of the fast response desired and the need for minimal distortion of the thermal behavior being measured, fine wire thermocouples were considered for use. The general physical behavior expected in the particular re-entry case of interest was:

1. The temperature would slowly increase for 3½ seconds, and then increase rapidly to a maximum of about 2500°F during the next 3½ seconds.

---

*Thermal Engr. Dept., Old Dominion Univ., Norfolk, Va.
** Instrument Research Div., Langley Research Center, Hampton, Va.

2. The atmospheric pressure would change from 3 mm Hg to 90 mm Hg during the seven-second period.

Both the continuous use and the calibration of fine-wire thermocouples at high temperature levels are beset with practical difficulties. The problem basically lies in the rate of deterioration of the thermocouple material. Consequently the maximum temperature at which .001 in. wires are continuously usable is about 40 percent of the larger gauges of the same material. A surface reaction producing an oxide coating 0.00025 in. thick on a 24 guage wire is insignificant, but the same oxidation on a .001 in. wire destroys 75 percent of its volume. For these reasons normal calibration techniques at elevated temperatures yield results of questionable value, and at temperatures above 1400°F yield no usable results.

It was not considered sufficient to calibrate the fine-wire thermocouples only at the low end of the temperature range to be encountered using standard techniques, leaving the behavior at higher temperature levels unknown. Since standard techniques could not be employed at the higher temperature levels a transient calibration technique was devised [1] in which the calibration would occur under conditions simulating re-entry, i.e., under conditions of a changing temperature to 2500°F in a seven second period and a changing environmental pressure described earlier.

The following sections will describe the transient calibration technique devised together with representative results obtained. Particular emphasis will be placed upon a thermal analysis of the calibration devise used, since the accuracy and validity of the results obtained by this transient technique are very much dependent upon the transient thermal behavior of the calibration system. A more thorough representation of the transient thermal behavior may be found in [2].

The analytical investigation of transient thermal effects presented herein was performed for the Langley Research Center of NASA under contract number NAS1-9434-2. Experimental portions of this investigation were performed simultaneously at the Langley Research Center.

SYMBOLS

A	cross-sectional area of thermocouple
Bi	Biot number, $h\,L/k$
h	convective heat transfer coefficient
k	thermal conductivity
m	$(hP/kA)^{\frac{1}{2}}$
P	perimeter of thermocouple cross-section
r	radial coordinate
R	radius of thermocouple
T	temperature
T_R	analytically evaluated surface temperature of thermocouple
T_∞	environment temperature
u'''	internal heat generation rate per unit volume
x	axial coordinate
α	thermal diffusivity
λ_n	eigenvalue
θ	temperature difference, $T-T_\infty$
τ	time

Subscripts

1 reference thermocouple lead wire

2 heater wire

CALIBRATION TECHNIQUE

In essence the calibration apparatus consisted of an electrically heated (60 Hz alternating current) wire to which was attached a reference thermocouple and the fine-wire test thermocouple. The test assembly was located within a vacuum chamber. Schematics of the heater wire-thermocouple junction and instrumentation are shown in Figures 1 and 2. The calibration procedure consisted of rapidly heating the central heater wire to about 2500°F within approximately seven seconds and comparing the output of the test and reference thermocouples during this period.

The transient temperature history of the heater wire that is intended to simulate the re-entry thermal history is achieved by using a fixed autotransformer (30 amps) to attenuate a motor driven one (20 amps). Power is first applied to both autotransformers through a relay. The motor drive continues to increase power to the heater wire until 6.85 seconds elapse, after which power to the autotransformer is interrupted, the motor drive reversed, returning the autotransformer to its starting position. Figure 3 illustrates a temperature-time profile of a typical calibration test.

The heater wire was a 0.020 in. platinum 13 percent rhodium wire that was 7.0 in. in length held by a fixture that allowed for heater expansion without exerting enough tension to stretch the wire at high temperatures.

Several types of thermocouple junctions were fabricated and tested. The type of junction used with greatest success particularly as regards fabrication difficulties is illustrated in Figure 4. The standard or reference thermocouple was a 0.005 in. platinum verus platinum 13% rhodium thermocouple whose legs were spot welded to the heater wire diametrically opposite each other. Great care was taken to minimize excess material at the welds to avoid depressing the heater wire temperature. The 0.001 in. Chromel versus Alumel test thermocouple leads were likewise spotwelded to the top surface of the platinum leg of the reference thermocouple.

Two integrating digital voltmeters (IDVM's) were used to measure the thermocouples' outputs. These integrating meters measure the average input over a 1/60 second interval, resulting in cancellation of reversible current effects (Peltier heating/cooling). In brief, these meters measure microvolt level signals in the presence of large levels of superimposed noise and sum the results of the two components of the current flow. A maximum reading rate of 43 readings/sec. was possible with a resolution of 1 microvolt and an uncertainty of about 0.01 percent $\pm$ 3 microvolt. A separate meter was used for each thermocouple, both meters being triggered to read over exactly the same time period by an external square wave generator. The voltages so read were supplied in BCD form to an

eighteen column digital recorder. The buffered input made a rate of 20 readings per second possible. The large column capacity permitted side by side printing of the simultaneous meter readings.

The heater-wire thermocouple apparatus was located within a vacuum chamber (1.5 x 1.0 x 1.0 ft.) in an attempt to simulate the atmospheric environmental history expected during re-entry conditions. The chamber was provided with electrical feed-throughs for the heater power and thermocouple leads. Most of the tests were conducted at constant pressure levels since the gradually increasing pressures were achieved only at the expense of distorting the heater wire temperature due to gas flow (local convective effects) into the chamber.

Additional descriptive information regarding the instrumentation and operation experiences may be found in [1].

ANALYSIS

One of the first elements to consider in investigating the accuracy of any temperature measurement is the possible disturbance of the temperature field being measured produced by the measuring device itself. In the present case the possibility exists that the temperature field in the heater wire may be distorted appreciably in the region of the standard and fine-wire thermocouple junctions. A second factor to consider here, since the calibration procedure is transient in character, is the response of the thermocouple to the rapid temperature variation experienced by the heater wire.

To estimate the magnitude of thermal distortions, leading to estimates of inaccuracies associated with the calibration technique, it was decided to obtain closed form analytical solutions of the temperature field for a simplified junction approximating the actual one. The simplified junction considered was that of a 0.010 in. diameter platinum wire attached to the 0.020 in. diameter heater wire. Since the cross-sectional area of the reference junction leads are over 100 times larger than the fine wire thermocouple leads, disturbance of the temperature field due to the reference lead would be expected to be much larger than that due to the test lead. Consequently, the presence of the test thermocouple leads was not considered initially for the purposes of analytical tractability.

The system considered, then, is illustrated in Figure 5. The governing equations for describing the thermal distortion at the junction of the two domain system are:

For the radial heat flow in the heater wire:

$$\frac{1}{\alpha_2}\frac{\partial\theta_2}{\partial\tau} = \frac{\partial^2\theta_2}{\partial r^2} + \frac{1}{r}\frac{\partial\theta_2}{\partial r} + \frac{u'''}{k_2} \tag{1}$$

I.C.: $\theta_2(r, 0) = 0$

B.C.: $\theta_2(0, \tau)$ is finite

$$-k_2 \frac{\partial\theta_2}{\partial r}(R, \tau) = k_2\ \theta_2$$

and the axial heat flow in the reference thermocouple:

$$\frac{1}{\alpha_1}\frac{\partial\theta_1}{\partial\tau} = \frac{\partial^2\theta}{\partial x^2} - m^2\ \theta_1 \tag{2}$$

I.C.: $\theta_1(x, 0) = 0$

B.C.: $\theta_1(0, \tau) = \theta_2(R, \tau)$

$\theta_1(\infty, \tau) = 0$

where

$$\theta = T - T_\infty$$

$$m = \sqrt{hP/kA}$$

With reference to equations (1) and (2) several observations should be made. Heat flow in the heater wire is assumed to be one-dimensional in the radial direction. This is a good assumption for fine wires of large L/d. The magnitude of temperature depression produced in the heater wire by conduction losses to the voltage terminals was calculated [3] and found to have no influence on the central region of the 7 inch long heater wire where the thermocouple junction was located. Thus the one-dimensional radial heat flow model is realistic.

Heat flow in the reference thermocouple is also assumed one-dimensional in the axial direction. Since the thermocouple has only one-fourth the cross-sectional area as the heater wire and behaves as a fin attached to the heater wire, this assumption is believed justified. The implicit assumption is made that the thermocouple heater wire junction is flat, which is a reasonable approximation due to the relative sizes of the wires.

The solutions (according to [2, 4]) to equations (1) and (2) are:

For the heater wire surface temperature:

$$T_R = T_\infty + \frac{u'''\alpha\tau}{k} + \frac{u'''R}{2h} - \frac{2u'''Bi}{k} \sum_{n=1}^{\infty} \frac{e^{-\alpha\lambda_n^2\tau}}{\lambda_n^2[Bi^2 + \lambda_n^2R^2]} \tag{3}$$

or in dimensionless form,

$$\frac{T_r - T_\infty}{\frac{u'''R^2}{k}} = F\theta + \frac{1}{2Bi} - 2Bi \sum_{n=1}^{\infty} \frac{e^{-\alpha\lambda_n^2\tau}}{(\lambda_n R)^2\,[Bi^2 + (\lambda_n R)^2]} \tag{4}$$

and for the reference thermocouple temperature:

$$\frac{T - T_\infty}{T_R - T_\infty} = e^{-mx} \tag{5}$$

The solutions (3) and (5) were evaluated at 0.5 second intervals for a seven-second period and are listed in Figure 6. For a given instant of time the heater wire surface temperature served as one of the boundary conditions for the thermocouple (i.e., $T_1(0, \tau) = T_2(R, \tau)$. The temperature distribution in the thermocouple was evaluated from (5), which actually describes the steady-state distribution in a fin. Consequently, this procedure contains an implied assumption that the temperature throughout the fin reacts instantaneously to changes in the heater wire surface temperature.

Since the temperatures experienced in these calibrations tests range from 70 to 2500°F, accurate solutions to equations (1) and (2) require accurate thermophysical properties data and heat transfer coefficients over the entire temperature range. Equations for the thermophysical properties employed in the calculations described in the preceding paragraph are presented in Appendix I.

It is conceivable that under actual test conditions thermocouple conduction, convection and radiation losses may drain sufficient energy from the heater wire so as to result in a lower base temperature than calculated from (4). Practically speaking, the temperature measured by the thermocouple would be lower than the undisturbed surface temperature of the heater wire. In order to estimate the possible difference between the theoretically determined temperature and the actual temperature the following procedure was followed. From computed results similar to those tabulated in Figure 6, the temperature experienced by the thermocouple node in contact with the heater wire after 3.5 seconds (or midway) through the test was about 1325°F. Using this temperature and the steady-state temperature gradient in the thermocouple at that time, the convective, conductive and radiation heat losses from the node were evaluated, in addition to the stored energy within the node. (The free convection heat transfer coefficient was evaluated using a correlation presented in [6].) The effect of these heat losses upon the temperature distribution in the thermocouple lead was then determined for a seven-second test period. The resulting modified temperature distribution was found to differ by a negligibly small amount from the previously calculated one. In particular, the modification for conduction and radiation losses produce very little effect on the junction node temperature--an occurrence that will be discussed in a later section.

Radiation Effects

If radiation heat losses from the reference thermocouple and heater wire are taken into consideration initially, i.e., in the development of the governing equations, equations (1) and (2) are modified as shown below where for the heater wire the only change is the inclusion of the radiation

term in the last boundary condition and for the reference thermocouple wire the radiation term must be included in the primary equation.

Therefore the heater wire:

$$\frac{\partial^2\theta_2}{\partial r^2} + \frac{1}{r}\frac{\partial\theta_2}{\partial r} + \frac{u'''}{k_2} + \frac{1}{\alpha_2}\frac{\partial\theta_2}{\partial\tau} \tag{6}$$

I.C.: $\theta_2(r, 0) = 0$

B.C.: $\theta_2(0, \tau)$ is finite

or $\frac{\partial\theta_2}{\partial r}(0, \tau) = 0$

$$-k_2 \frac{\partial\theta_2(R, \tau)}{\partial r} = k_2\theta_2(R, \tau) + \epsilon\sigma\theta_2^{\,4}$$

and for the reference thermocouple:

$$\frac{\partial^2\theta_1}{\partial x^2} - m^2\theta_1 - \frac{\epsilon P}{k_1 A_1}\sigma\theta_1^{\,4} = \frac{1}{\alpha_1}\frac{\partial\theta_1}{\partial\tau} \tag{7}$$

I.C.: $\theta_1(x, 0) = 0$

B.C.: $\theta_1(0, \tau) = \theta_2(R, \tau)$

$\theta_1(\infty, \tau) = 0$

The transient temperature history of the heater wire and the thermocouple wire may then be obtained by the solution of these equations.

It is seen that equations (6) and (7) are both non-linear, (6) by virtue of the radiation boundary condition, and (7) by virtue of the non-linear radiation term in the governing equation itself. Solution of this system of non-linear partial differential equations is a considerable level of difficulty higher than that required in the solution of (1) and (2), and must be done numerically.

Even if (6) and (7) were to be solved, however, a factor which is not taken into account by these equations is the radiation exchange between the heater wire and thermocouple lead(s). Inclusion of this closer approximation to reality involves an additional considerable increase in level of difficulty in solving the governing system of equations.

DISCUSSION

Temperature Distributions in Junction Region

As indicated earlier, the analytically determined junction node temperature of the 0.020 in. reference wire is influenced very little by the average heat losses occurring at a temperature of about 1300°F for the entire seven-second test period. This occurrence appears to imply that the temperature within the heater wire in the junction region is not changed appreciably by the presence of the reference thermocouple. These results indicate that the conduction, convection and radiation losses from the reference junction node produce a temperature change of only a small fraction of a degree over a seven-second period. Viewed in a different perspective, the energy generated within the heater wire within a 3.5 second period is of such a magnitude as to raise the temperature of the thermocouple approximately 1245°F. In comparison the temperature change occurring as a result of the maximum heat losses within the reference junction node acting over twice that length of time produces only a very small temperature change. Consequently, the energy "drained" from the heater wire by the reference thermocouple is of such comparatively small magnitude that the temperature distribution within the heater wire is not disturbed significantly by the presence of the reference thermocouple leads. If this is true, then the disturbance produced by the presence of the fine-wire thermocouple leads is even less significant, since they offer a conduction path less than 1/100 times as large of that of the reference leads. Other possible sources of error, however, must be evaluated, one of which is the error associated with the precise nature of attachment to the heater surface.

Method of Attachment

The temperature gradient in the attached thermocouples, as exemplified by the temperatures tabulated in Figure 6, is quite steep close to the heater wire. This occurrence is related to another type of error that may exist in thermocouple measurements, namely that associated with the presence of a third material forming the thermocouple bead or providing the means of attachment to a surface. Generally the possible existence of a temperature difference across a thermocouple bead or substrate material is neglected in theoretical models of thermocouple systems. That is, most analyses deal with the case where the thermocouple bead is very small. Such simplifications are not always justified, as indicated from several investigations. Suh and Tsai [3], for example, found that in a typical measurement of a burning solid propellant the temperature difference across the thermocouple bead is of the order of 180 to 210°F, for a thermocouple of 0.0005 in. diameter.

Errors associated with thermocouple response characteristics also may be influenced by the presence of substrate or bead material. Such errors are discussed in [4], where tests were conducted on thermocouples surrounded with silver epoxy, plain epoxy, no epoxy, solder and glue. Not surprisingly, various response characteristics were observed. Perhaps of even greater importance relative to the present investigation is the following statement by Parker [6]: "In addition to the experimental work, several analytical heat transfer solutions were made with the use of a computer and compared with the experimental data. In general, there was poor agreement because it was extremely difficult to determine very small thicknesses between the thermocouple and substrate accurately."

In the calibration technique investigated here, very high temperature levels and large temperature gradients near the junction region are experienced, in addition to rapid temporal variations. Consequently the preceding comments are quite relevant. In general, any uncertainty in the precise location of the thermocouple junction with respect to the heater wire surface, whether produced by the presence of substrate material or a welding process, may result in significant error. If a bead is formed at the junction, obviously the uncertainty associated with response characteristics may be cause for considerable error.

Response Characteristics of Thermocouples

Both analytical and experimental techniques have been developed in the literature to describe the transient response characteristics of thermocouples, [8, 9]. In the present application the accuracy of the calibration technique appears strongly dependent upon the comparative response characteristics and may be of greater relevance than errors due to conduction and radiation losses per se. In the present calibration

procedure the possibility exists that the test thermocouple responds more quickly to the heater wire surface temperature than the relatively more massive reference thermocouple. Thus, though a difference between the indicated temperatures of the two thermocouples may be observed, it is conceivable that the temperature of the fine wire thermocouple may be more accurate than that of the reference thermocouple which was initially intended to provide the "true" surface temperature. It is believed that additional investigation of the response characteristics of the thermocouple assembly must be made before the accuracy of the calibration technique may be precisely and quantitatively evaluated.

Deterioration of Thermocouple Performance at High Temperatures

As discussed earlier, attempts to calibrate fine wire thermocouples at high temperature levels proves to be difficult because of oxidation (and destruction) of the thermocouple wires. The oxidation occurring at these high temperatures produced the need for the rapid transient calibration procedures being investigated here, and although the time at which the thermocouples are at high temperatures is short here, the possible influence of surface chemical reactions upon thermocouple accuracy should be considered.

Reference [10] discusses at some length catalytic activity in platinum group temperature sensors in connection with possible measurement errors. As in several other investigations the authors proposed the use of non-catalytic coatings on thermocouples for most reacting gas temperature measurements. It appears advisable in the present transient calibration procedure to also employ such coatings. A rather extensive discussion of thermocouple coatings and a compilation of pertinent literature may be found in [10].

In addition to preventing or minimizing chemical decomposition of the thermocouple wires the radiation heat interactions between the heater wire, thermocouple wires and environment, which are quite difficult to accurately determine analytically, would be greatly reduced due to the lowered surface temperature of the coating. The convective heat losses from the thermocouple leads would also be somewhat reduced for the same reason. Addition of coating material, however, could affect the relative response characteristics of the two thermocouples. The ultimate effect upon the accuracy of the calibration technique produced by the addition of coatings appears to be primarily dependent upon the two phenomena--reduced radiation heat transfer losses and transient response characteristics (although conduction losses and convective heat transfer with the environment must also be considered). Again, the need for investigation of transient response characteristics is indicated.

EXPERIMENTAL RESULTS

A plot of typical experimental results obtained is shown in Figure 3. Considering sources of error discussed in the previous sections, the magnitude of the maximum error measured (indicated reference thermocouple temperature minus fine wire thermocouple temperature) is quite small (14°F) over the temperature range experienced (2400°F). It is interesting to observe that the character of the calibration curves changes only slightly from one run to another. Most of the calibration shift occurred after the first run. Although not shown in Figure 3, the difference in the calibration curves from run 5 to run 20 was minimal.

CONCLUDING REMARKS

A transient technique for calibrating fine-wire thermocouples (.001 in.) up to temperatures of about 2500°F was developed and preliminary experimental tests and analyses were performed. The technique consisted of attaching the test thermocouple and a reference thermocouple (0.010 in.) to a horizontal heater wire (0.020 in.) at essentially a single junction. The heater wire was electrically heated to about 2500°F within a 6-8 second period, while the output of the two thermocouples was automatically recorded. The principle advantage of this transient technique is the avoidance of severe reduction of thermocouple performance that ordinarily results from steady-state calibrations in a high temperature oxidizing atmosphere. The theoretical thermal analysis considered a simplified model of the thermocouple junction which included only the reference thermocouple leads attached to the heater wire.

The results of the analytical and experimental data led to the following conclusions:

1. The temperature depression of the heater wire surface caused by the presence of the reference thermocouple leads was found to be negligible throughout the test. Consequently, the test thermocouple leads, having a cross-sectional area 1/100 times that of the reference thermocouple leads, will have essentially no effect upon the heater wire temperature. A definitive type analysis of the temperature-time-space field within the heater wire thermocouple junction region, considering variable thermal properties, electrical properties, and radiation heat exchange between adjacent surfaces, would require extensive computer analysis using numerical techniques.

2. Errors associated with the presence of substrate or bead material may be quite significant, due to the existence of a large temperature difference across the material or due to changes in response characteristics. Uncertainties in the placement of the fine wire junctions may also result in error, indicating that a more judicious placement of these junctions may be warranted.

3. Errors due to a difference in response characteristics of the reference and test thermocouples may be more significant than that due to disturbance of the heater wire temperature produced by the presence (attachment) of the thermocouple wires to it. It is possible to experimentally determine the transfer function of each thermocouple. Additional experimental and theoretical investigation of the comparative transient response characteristics of the thermocouples also appears warranted.

4. The addition of high temperature, chemically inert coating materials to the thermocouples appears desirable principally in order to minimize radiation heat transfer interactions at high temperature levels and to minimize aging effects produced by exposure of bare thermocouple wires to various atmospheres.

REFERENCES

1. Stewart, W.F., and Edwards, S.F., "Calibration of Small Gauge Thermocouples," Rev. Sci. Instr., Vol. 43, No. 1, p., 169, Jan. 1972.

2. Keshock, E.G., "Investigation of Factors Affecting the Heater Wire Method of Calibrating Fine Wire Thermocouples," Final Report, NASA Task Order No. NAS1-9434-2, NASA CR-112041, 1972.

3. Parker, John (Ed.), "Weston Engineering Notes," (W-1, Vol. 5, Number 1, Weston Electrical Instrument Corp., Newark, N.J., March 1950.

4. Carslaw, H.S., and Jaeger, J.C., "Conduction of Heat in Solids," 2nd Ed., Oxford at the Clarendon Press, 1959.

5. Suh, Nam P., and C.L. Tsai, "Thermocouple Response Characteristics in Deflagrating Low Conductivity Materials," (Paper No. 70-HT-7) ASME Headquarters.

6. Parker, Robert, (University of California), "Response of Thermocouples to a Rapid Temperature Rise," Advances in Test Measurement, Vol. 5, New York, October 28, 1968.

7. Moen, W.K., "Surface Temperature Measurements," Instruments and Control Systems, Vol. 33, p., 71, Jan., 1960.

8. Shepard, Charles E., and Isidore Warshawsky, "Electrical Techniques for Compensation of Thermal Time Lag of Thermocouples and Resistance Thermometer Elements," National Advisory Committee for Aeronautics, (NACA TN 2703), NACA Washington, D. C., (May 6, 1952).

9. "HT-Micro-Miniature Thermocouples," Technical Data 4336-1, Baldwin-Lima-Hamilton Co., Waltham, Mass.

10. Ash, R.L., Crossman, G., and Chitnis, R.V., "Catalytic Considerations in Temperature Measurement," 5th Symposium on Temperature Its Measurement and Control in Science and Industry, June 21-24, 1971.

11. "Chromel Alumel Thermocouple Alloys," Catalog M-61-C-A, Hoskins Mfg. Co., Detroit, Mich., 1961.

12. Caldwell, F.R., "Thermocouple Materials," NBS Monograph 40, U.S. Dept. of Commerce, March 1, 1962.

FIGURES

Fig. 1 Schematic of heater wire-thermocouple junction

Fig. 2 Calibration system schematic

Fig. 3 Typical calibration test results

Fig. 4 Compound thermocouple junction successfully fabricated and tested

Fig. 5 Simplified analytical model of heater wire-thermocouple junction analyzed

Fig. 6 Temperature distribution in thermocouple wire for seven-second heating period.

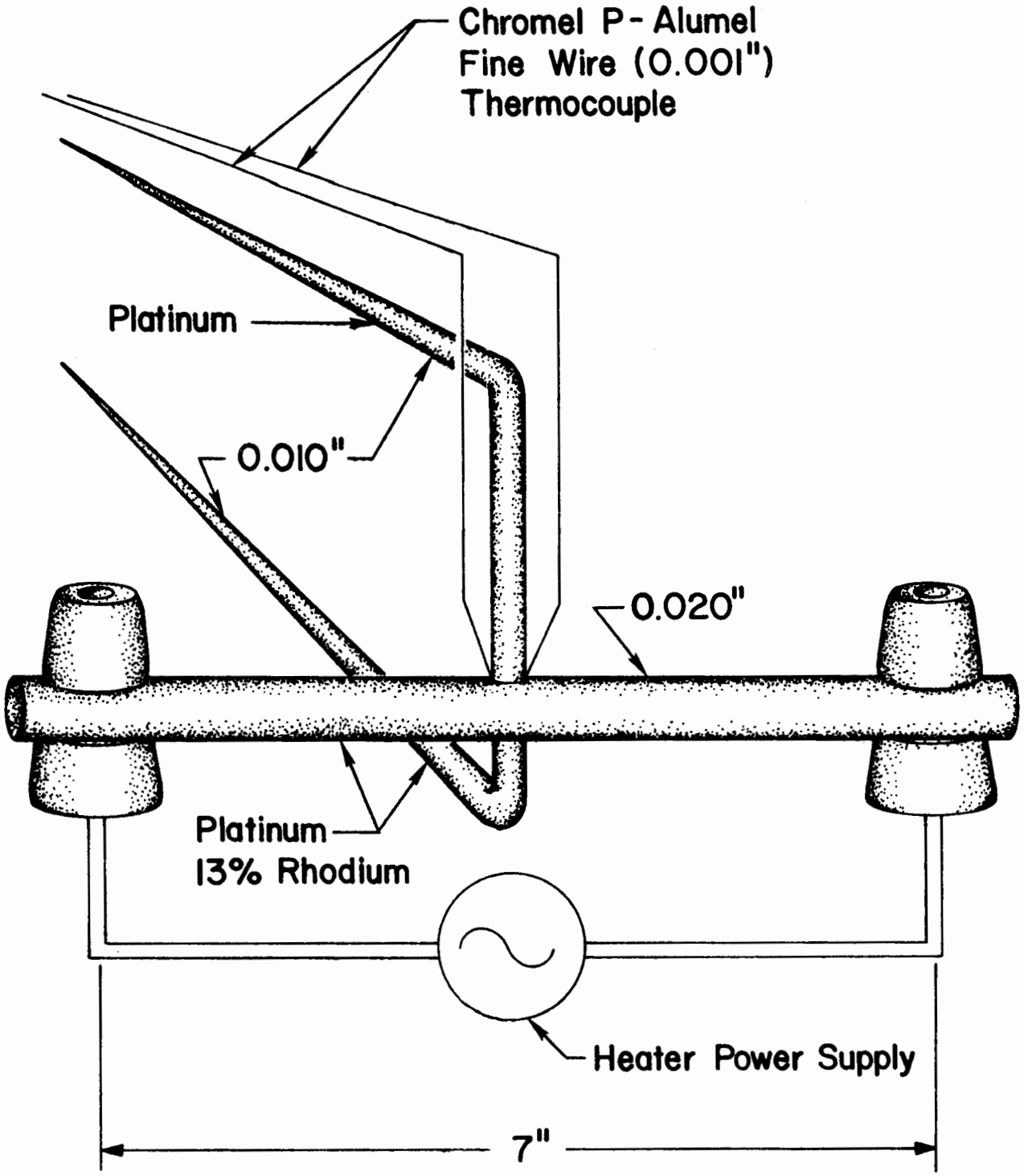

FIG. 1 Schematic of Heater Wire-Thermocouple Junction.

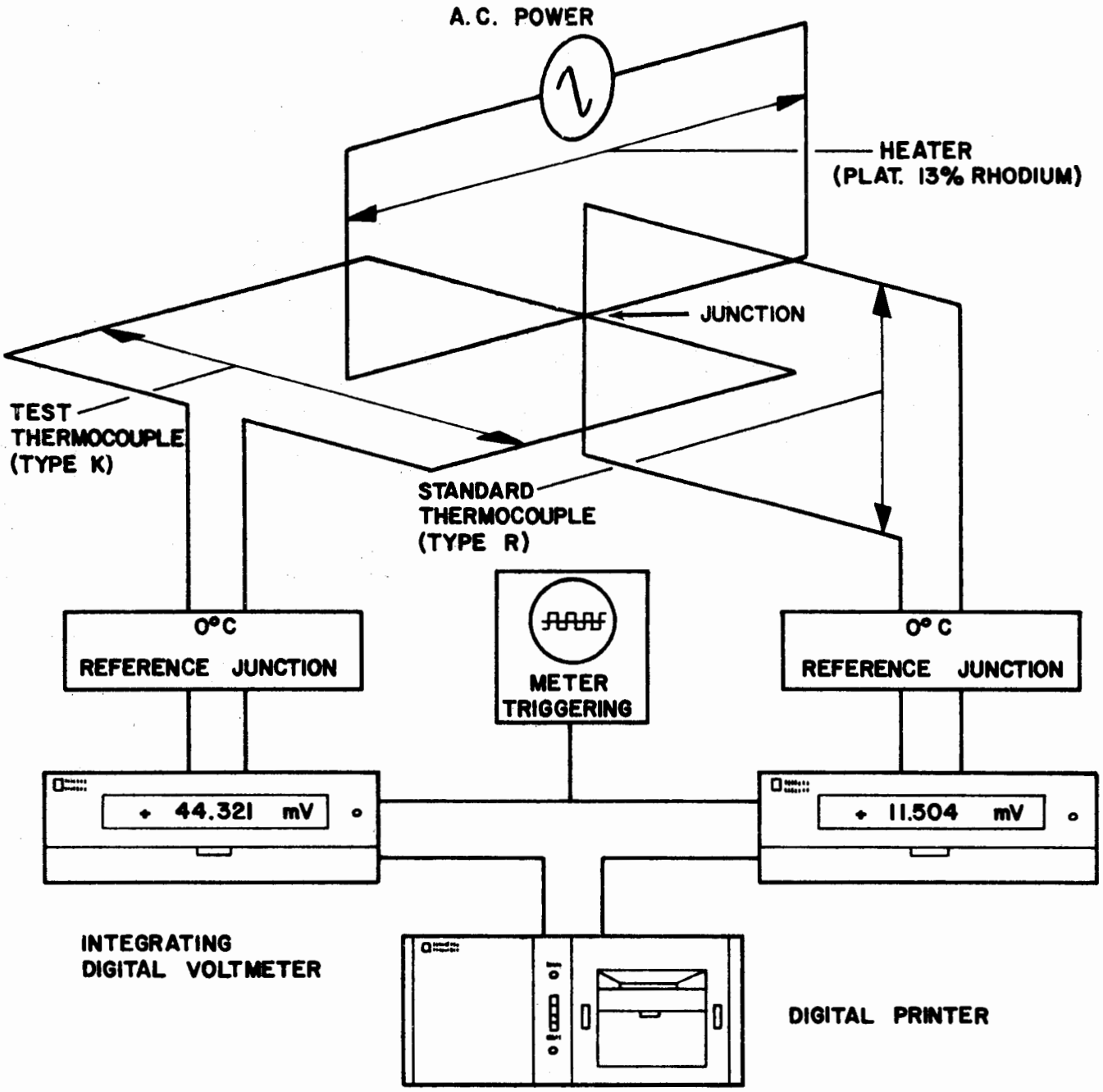

FIG. 2- Calibration System Schematic

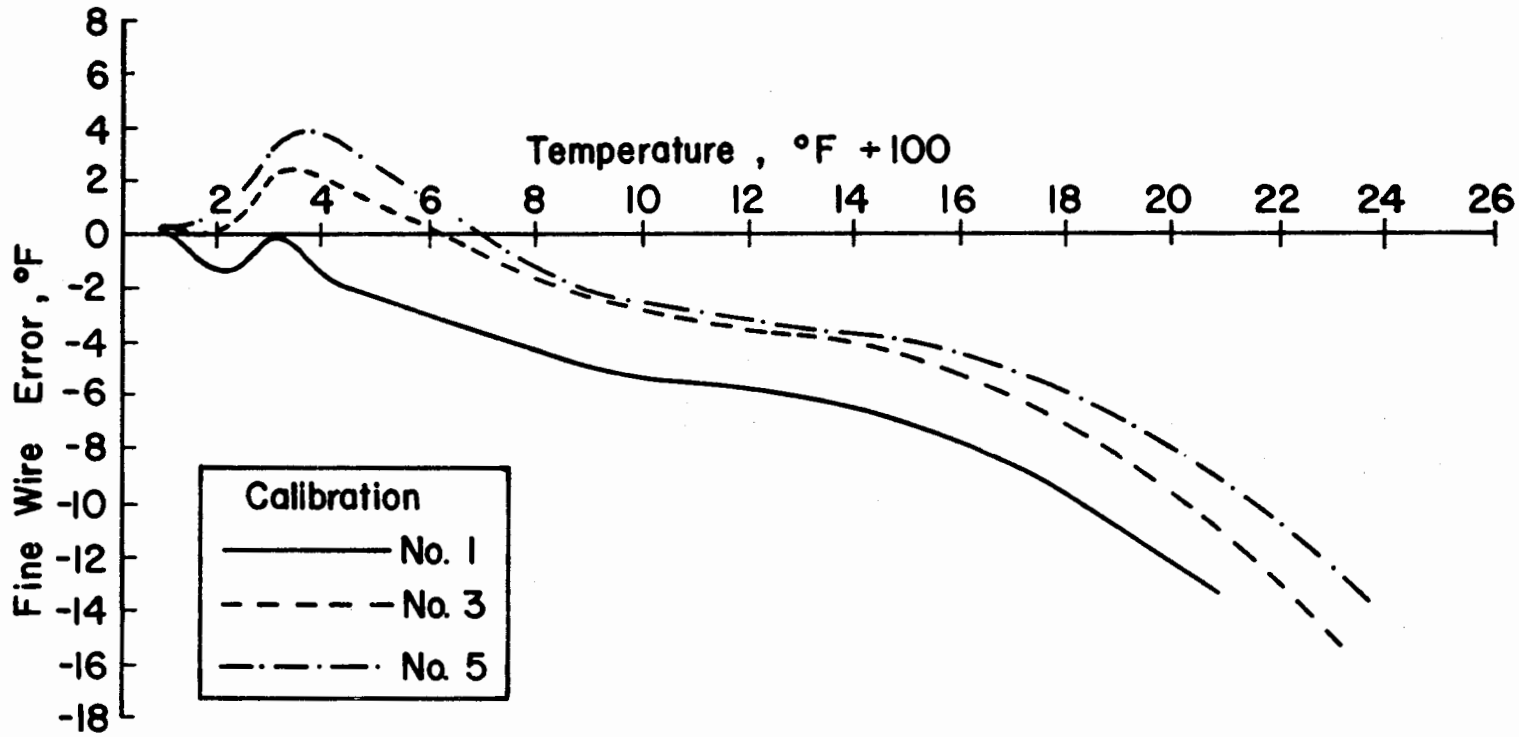

Fig. 3. Typical calibration test results. Thermocouple error vs. heater wire temperature.

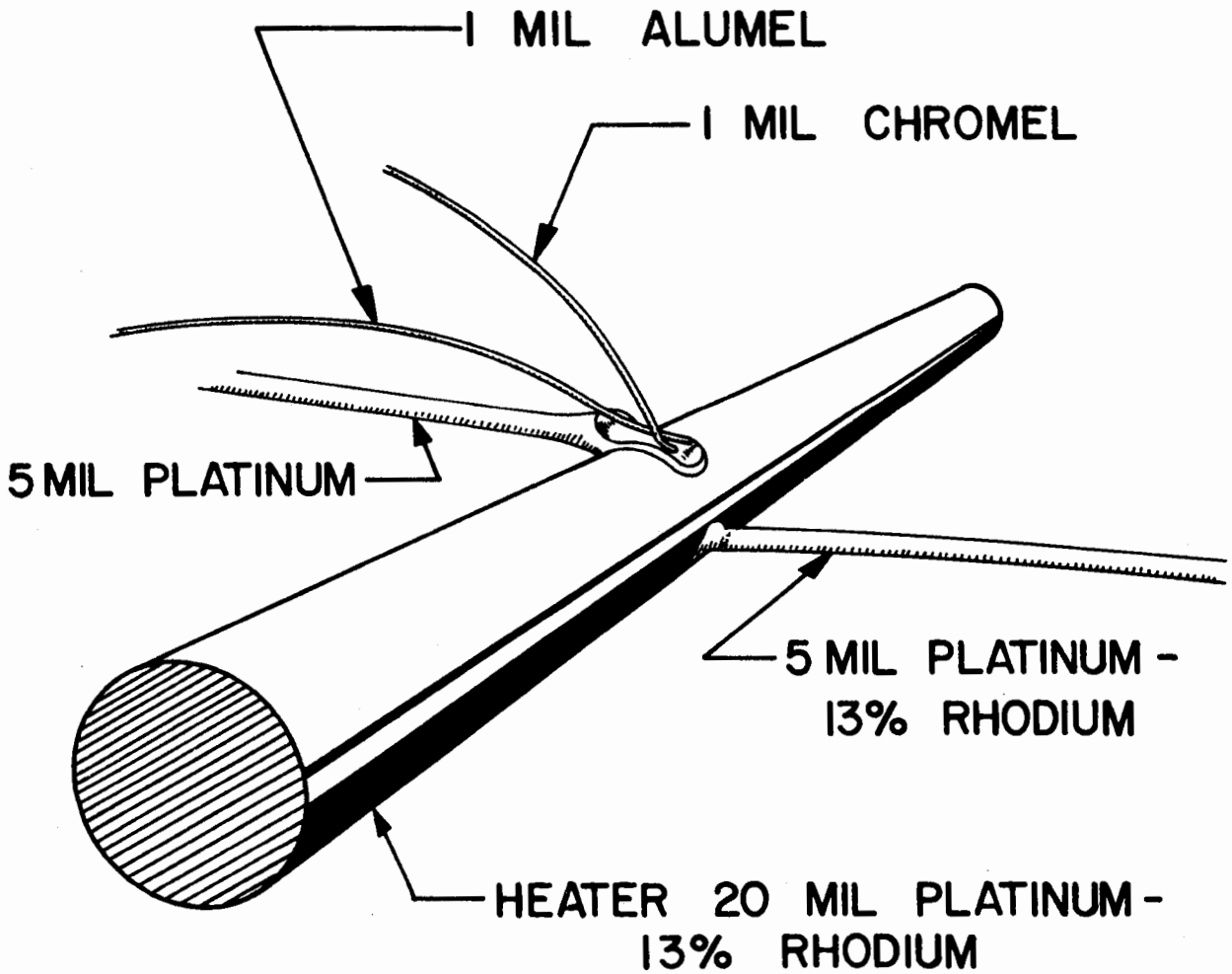

Fig. 4 Compound Thermocouple Junction

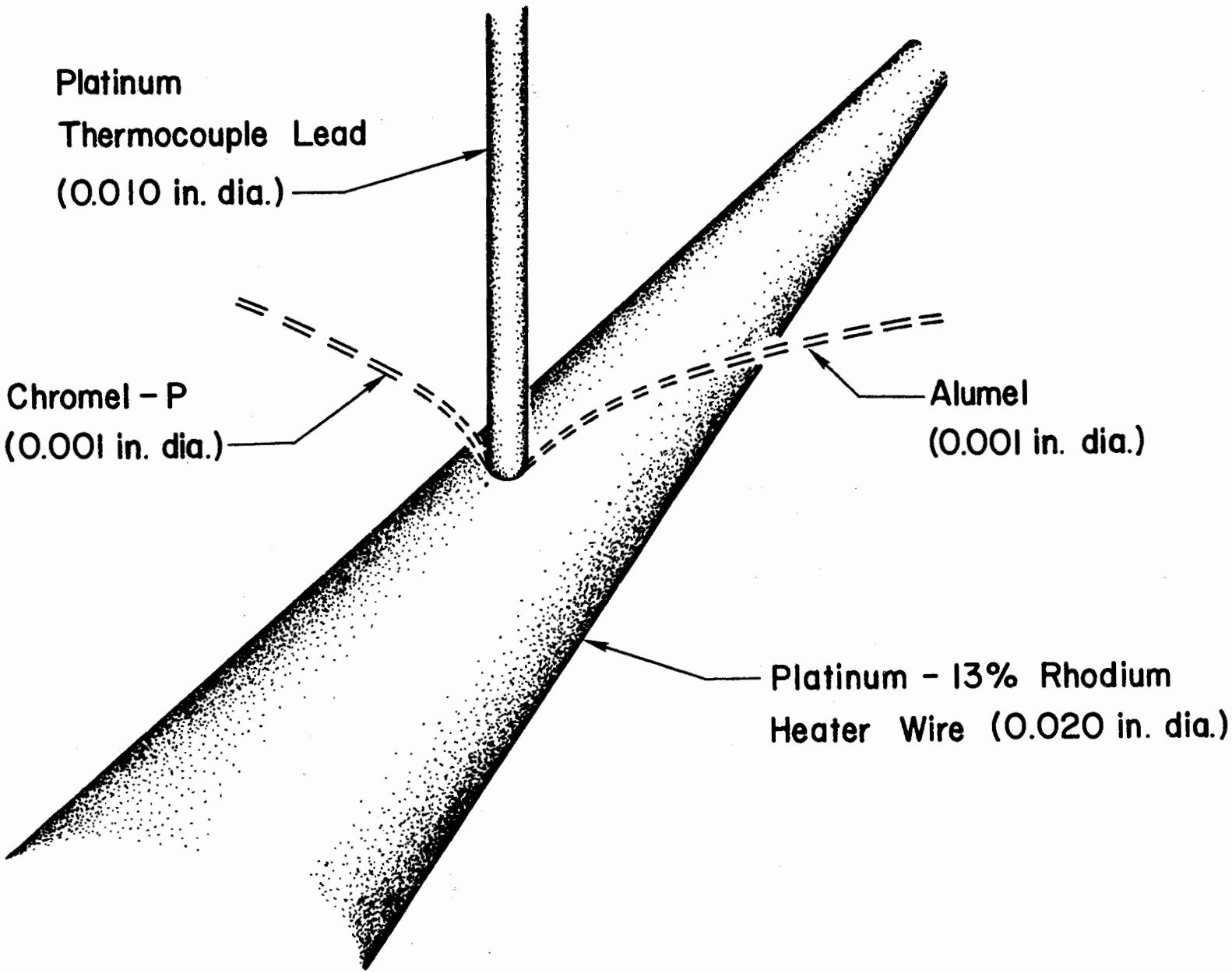

Fig. 5 Simplified Analytical Model of Heater Wire - Thermocouple Junction.

Node No.	Time = 0.00 sec Temp. (°F)	Time = 0.50 sec Temp.	Time = 1.50 sec Temp.
1	70.0	248.3	605.0
2	70.0	146.8	300.3
3	70.0	103.0	169.1
4	70.0	84.2	112.7
5	70.0	76.1	88.4
6	70.0	72.6	77.9
7	70.0	71.1	73.4
8	70.0	70.5	71.5
9	70.0	70.2	70.6
10	70.0	70.1	70.3

Node No.	Time = 3.00 sec Temp. (°F)	Time = 4.50 sec Temp.	Time = 6.50 sec Temp.
1	1140.1	1675.1	2388.4
2	530.6	760.9	1067.9
3	268.2	367.4	499.5
4	155.3	198.0	254.9
5	106.7	125.1	149.6
6	85.8	93.7	104.2
7	76.8	80.2	84.7
8	72.9	74.4	76.3
9	71.2	71.9	72.7
10	70.9	70.8	71.2

FIG. 6 Temperature distribution in thermocouple wire for seven-second heating period, (each node is of length 0.001 ft.).

APPENDIX I

PROPERTIES

For solids experiencing large temperature variations the heat flow and temperature distributions within those solids can be significantly influenced by a temperature dependent thermal conductivity (to a lesser degree the same holds for density and specific heat). Likewise, for a solid subjected to radiation and natural convection boundary conditions, both the radiative characteristics of the surface and the free convection heat transfer coefficient will in general be temperature dependent.

The following sections contain the expressions used to take into account temperature varying properties appearing in the equations from which the temperature-time histories described in the text were obtained.

Thermophysical Properties

Thermophysical properties for Chromel-P and Alumel were obtained from [11] for the temperature range from about 200 to 1000°F. For temperatures beyond 1000°F extrapolated values were employed by using the straight line equations indicated below.

Chromel-P

$k = 5.96 \quad (10^{-3})T + 9.76$ Btu/hr-ft-°F

$\rho = 545 \ lb_m/ft^3$

$c_p = 0.107$ Btu/lb_m-°F

For platinum and platinum-rhodium alloys property values may be found in [12]. For the system of units used herein the following expressions describe the property variations, as recommended in [12]:

Platinum

$k = 41.137-0.1387(10^{-2})T$ Btu/hr-ft-°F (T in °F)

$\rho = 1340 \ lb_m/ft^3$

$c_p = 0.371 \ (10^{-5})T + 0.0311$ Btu/hr-ft-°F (T in °F)

$\alpha = 0.864-0.2913(10^{-4})T$ ft^2/hr (T in °F)

Platinum-10% Rhodium

$$k = 41.3\,[1 + 1.11(10^{-4})\,(T-64.4)\,] \qquad \text{Btu/hr-ft-}^{\circ}\text{F} \quad (T \text{ in } ^{\circ}\text{F})$$

$$\rho = 1266 \text{ lb}_m/\text{ft}^3$$

$$c_p = 0.0383 \text{ Btu/lb}_m\text{-}^{\circ}\text{F}$$

$$\alpha = 0.853\,[1 + 1.11(10^{-4})\,(T-64.4)] \qquad \text{ft}^2/\text{hr} \quad (T \text{ in } ^{\circ}\text{F})$$

Since properties were not available for platinum 13% rhodium, the foregoing properties for platinum 10% rhodium were used.

Emissivity

Total and spectral emissivities of platinum may be found in [12]. Emissivity, as understood therein, referred to the ratio of energy radiated hemispherically per unit area per unit time by a surface to that radiated by a blackbody at the same temperature.

Expressions describing the total emissivity of platinum are:

$$E = 0.828\,(10^{-4})T \qquad 240 < T < 1690$$

$$E = 0.0837 + 0.333(10^{-4})T \qquad 1690 < T < 2890 \quad (T \text{ in } ^{\circ}\text{F})$$

No similar data was available for platinum-rhodium alloys. In the absence of such data the above expressions could likely be used without appreciable error.

No data describing radiative surface characteristics of Chromel-Alumel materials appears available in the literature.

Resistivity

For temperatures up to 2700°F, an equation relating the resistivity of platinum to temperature is:

$$R_t = R_o\,[1 + 3.9788(10^{-3})T - 5.88(10^{-7})T] \quad \text{ohms/cmf} \quad (T \text{ in } ^{\circ}\text{C})$$

Free Convection Heat Transfer Coefficient

Generalized correlations for free convection heat transfer coefficients involve the property groupings of the Prandtl and Grashof numbers of the surrounding fluid. These properties are readily available.

A REPORT ON THE ACTIVITY OF COMMITTEES INVOLVED IN STANDARDIZATION OF TRANSDUCERS AND RELATED MEASUREMENTS

Dale W. Rockwell
Navy Metrology Engineering Center
Pomona, California

Steve Rogero
Jet Propulsion Laboratory
Edwards Air Force Base, California

7th Transducer Workshop of the Telemetry Group
Range Commanders Council
Albuquerque, New Mexico
4 – 6 April 1972

AMERICAN NATIONAL STANDARDS INSTITUTE (ANSI)

The purposes of the American National Standards Institute (formerly ASA and USASI) include the following: To act as the national coordinating institution for voluntary standardization in the United States of America through which organizations concerned with standardization may cooperate in recognizing, establishing, and improving standards of the United States of America based on a concern with standardization may cooperate in recognizing, establishing, and improving standards of the United States of America based on a consensus of parties at interest, to the end that such standards remain dynamic; that duplication of work is minimized; that promulgation of conflicting standards may be avoided; and that individual enterprise and initiative is encouraged. Committee activities in the general field of transducers are described in the following paragraphs. (American National Standards Institute, Inc., 1130 Broadway, New York, N. Y. 10018)

B88 CALIBRATION OF MEASURING SYSTEMS FOR PRESSURE, TEMPERATURE, FLUID FLOW, LIQUID LEVEL, FORCE, MASS, AND DENSITY

SCOPE: Establishment of standard techniques for calibration of measuring systems for pressure, temperature, fluid flow, liquid level, force mass, and density.

CHAIRMAN: J. W. Murdock, Naval Ships Engineering Center Philadelphia Division, Code 6760, Philadelphia, PA 19112

SPONSOR: American Society of Mechanical Engineers

PUBLICATIONS: None

DOCUMENTS BEING DRAFTED:

(a) "A Guide for the Dynamic Calibration of Pressure Transducers" prepared by the Subcommittee on Pressure. This document has been approved by the B88 Committee and is being forwarded to ASME for approval.

(b) "A Guide for the Static Calibration of Pressure Transducers" is presently being prepared by the Subcommittee on Pressure.

ANSI B88 Continued

(c) "Guide for Calibration of Differential Pressure Type Flow Meters" is being drafted by the Subcommittee on Fluid Flow.

(d) The Subcommittee on Liquid Level is preparing a procedure for bench calibration of Sounding Rules and Gaging Tapes.

(e) The Subcommittee on Force is working on a document.

DOCUMENTS BEING CONTEMPLATED: The Subcommittee on Pressure plans to prepare a number of generalized calibration procedures covering both static and dynamic calibration of pressure transducers.

Individuals interested in participating may contact the chairman as most subcommittees are open to a limited number of qualified individuals.

C96 TEMPERATURE MEASUREMENT THERMOCOUPLES

SCOPE: Requirements for temperature measurement thermocouples, including terminology, fabrication procedures for ascertaining accuracy, limits of error, wire sizes, installation, color code of thermocouple and thermocouple extension wire, and temperature emf tables.

CHAIRMAN: J. Ward Percy, 55 Wingra Ave, Rutherford, NJ

SPONSOR: Instrument Society of America

PUBLICATIONS: C96.1-1964 (R1969) Temperature Measurement Thermocouples (This document was revised and approved in 1969 and is based on ISA RP1.)

Various sections are open to well qualified new members. Individuals interested in participating in the committee's activities may contact the chairman.

S1 ACOUSTICS

SCOPE: Standards, specifications, methods of measurement and test, and terminology, in the fields of physical acoustics, including noise, architectual acoustics, electroacoustics, sonics, and ultrasonics and underwater sound, but excluding those aspects which pertain to safety, tolerance and comfort.

CHAIRMAN: J. W. Percy, 55 Wingra Avenue, Rutherford, NJ

SPONSOR: Acoustical Society of America

PUBLICATIONS:

S1.1-1960 "Acoustical Terminology (Including Mechanical Shock and Vibration)".
S1.2-1962 "Physical Measurement of Sound, Method For".
S1.4-1961 "General-Purpose Sound Level Meters, Specification for".
S1.6-1967 "Preferred Frequencies and Band Numbers for Acoustical Measurements".
S1.8-1969 "Preferred Reference Quantities for Acoustical Levels".
S1.10-1966 "Calibration of Microphones, Method For The".
S1.11-1966 "Octave, Half-Octave, and Third-Octave Band Filter Sets, Specification for".
S1.12-1967 "Laboratory Standard Microphones, Specifications For".

S2 MECHANICAL SHOCK AND VIBRATION

SCOPE: Standards, specifications, methods of measurement and test, and terminology in the fields of mechanical shock and vibration, but excluding those aspects which pertain to biological safety, tolerance, and comfort.

SPONSOR: Acoutical Society of America; American Society of Mechanical Engineers

CHAIRMAN: D. C. Kennard, Jr., Northwestern Michigan College, Traverse City, Michigan 49684

ANSI S2 Continued

PUBLICATIONS:

S2.2-1959 "Calibration of Shock and Vibration Pickups, Methods for the".
S2.3-1964-1964(R1970) "High-Impact Shock Machine for Electronic Devices, Specification for".
S2.4-1960(R1966) "Specifying the Characteristics of Auxillary Equipment for Shock and Vibration Measurements, Method for".
S2.5-1962 "Specifying the Performance of Vibrating Machines, Recommendations for".
S2.6-1963 "Specifying the Mechanical Impedance of Structures, Nomenclature and Symbols for".
S2.10-1971 "Analysis and Presentation of Shock and Vibration Data, Methods for".
S2.11-1969 "Calibrations and Tests for Electrical Transducers Used For Measuring Shock and Vibration, Selection of".

Z7 ILLUMINATING ENGINEERING NOMENCLATURE AND PHOTOMETRIC STANDARDS

SCOPE: The definition of terms used in illuminating engineering and photometry, together with the formulation of general principles to govern the measurement of light and illumination and the application of such measurements in practice.

SPONSOR: Illuminating Engineering Society

PUBLICATIONS: 27.1-1967 "Illuminating Engineering, Nomenclature and definitions for"

AMERICAN SOCIETY OF MECHANICAL ENGINEERS (ASME)

PTC 19 COMMITTEE ON INSTRUMENTS AND APPARATUS

SCOPE OF THE SUBCOMMITTEE: The scope of the work of PTC Committee No. 19 on Instruments and Apparatus is to describe the various types of instruments and methods of measurement likely to be prescribed in any of the ASME Power Test Codes. Such details as the limits and sources of error, method of calibration, precautions, etc., as will determine their range of application are given.

CHAIRMAN: J. C. Westcott, General Electric Co., Bldg 2, Room 620, 1 Rain Road, Schenectady, NY 12345, Ph (518) 374-2211 Ext 52438

PUBLICATIONS:

ASME Power Test Codes related to PTC 19.2, "Instruments and Apparatus: Pressure Measurement," 1965.
PTC 19.3, "Instruments and Apparatus: Temperature Measurement," 1961
PTC 19.5.2, "Instrument and Apparatus: Volumetric (Displacement) Meters," 1966
PTC 19.5.3, "Instruments and Apparatus: Fluid Velocity Measurement," 1965
PTC 19.5.4, "Instruments and Apparatus: Flow Measurement," 1959
PTC 19.5.5, "Instruments and Apparatus: Special Methods of Flow Measurement," 1966
PTC 19.17, "Determination of the Velocity of Liquids," 1965

DOCUMENTS/REVISIONS PLANNED:

a. Revision of PTC 19.2 on Pressure Measurement to bring it up to the "state-of-the-art".
b. A document on real time computer application for performance testing.

The chairman is looking for qualified new members to Committee 19.2, on pressure, and for a committee on computer applications in testing. Interested individuals are invited to contact the chairman.

AMERICAN SOCIETY FOR TESTING AND MATERIALS (ASTM)

The American Society for Testing and Materials is a national, nonprofit, technical scientific and educational society which centers its activities on research and standardization of specifications and methods of testing materials. American Society for Testing and Materials, 1916 Race St., Philadelphia, PA 19103

INSTRUMENT SOCIETY OF AMERICA

STANDARDS AND PRACTICES DEPARTMENT

NATIONAL INDUSTRY STANDARDS PREPARED BY TRANSDUCER STANDARDS DIVISION

H. N. Norton Director[1]
4800 Oak Grove Drive
Pasadena, CA 91103

ISA-537.1 ELECTRICAL TRANSDUCER NOMENCLATURE AND TERMINOLOGY

SCOPE: Establishes standard uniform nomenclature for transducers and uniform simplified terminology for transducer characteristics.

CHAIRMAN: Harry Norton (task complete)

PUBLICATIONS: ISA-537.1 Electrical Transducer Nomenclature and Terminology.

ISA-537.2 SPECIFICATIONS AND TESTS FOR PIEZOELECTRIC ACCELERATION TRANSDUCERS

SCOPE: New document to supersede existing "aerospace testing" document; also new document to avoid, wherever possible, conflicts with similiar ANSI committee.

CHAIRMAN: John Ramboz

PUBLICATIONS: ISA-RP 37.2 Specifications and tests for Piezoelectric Transducers for Aero-Space Testing (1964)

DOCUMENTS BEING DRAFTED:

(a) ISA-SP 37.2

ISA-537.3 SPECIFICATIONS AND TESTS FOR STRAIN-GAGE PRESSURE TRANSDUCERS

SCOPE: Establishes uniform minimum specifications for design and performance characteristics; uniform acceptance and qualification test methods, including calibration techniques; uniform presentation of minimum test data; a drawing symbol for use in electrical schematics

CHAIRMAN: Paul S. Lederer (task complete)

PUBLICATIONS: ISA-SP37.3

(1) Inquiries regarding committee activities and membership should be sent to the director.

ISA-537.4	SPECIFICATIONS AND TESTS FOR RESISTIVE (PLATINUM-WIRE) TEMPERATURE TRANSDUCERS.	SCOPE: Prepare document on platinum-wire type temperature transducers. CHAIRMAN: Howard Chandon PUBLICATIONS: None DOCUMENTS BEING DRAFTED: ISA-SP37.4. A preliminary draft has been circulated among committee members.
ISA-S 37.5	SPECIFICATIONS AND TESTS FOR STRAIN-GAGE ACCELERATION TRANSDUCERS	SCOPE: See (S 37.3) CHAIRMAN: Loyt Lathrup, (task complete) PUBLICATIONS: ISA-SP 37.5
ISA-537.6	SPECIFICATIONS AND TESTS FOR POTENTIOMETRIC PRESSURE TRANSDUCERS	SCOPE: See (S37.8) CHAIRMAN: Harry Norton (task complete) PUBLICATIONS: ISA-SP 37.6
ISA-SP 37.8	SPECIFCATIONS AND TESTS FOR STRAIN-GAGE FORCE TRANSDUCERS (LOAD CELLS).	SCOPE: Prepare document on Strain-Gage Force Transducers. CHAIRMAN: Charles Silver PUBLICATIONS: None DOCUMENTS BEING DRAFTED: ISA-SP 37.8 A draft has been prepared and circulated among committee members.

ISA-S37.9	SPECIFICATION AND TEST FOR THERMOELECTRIC TEMPERATURE TRANSDUCERS	SCOPE: Prepare document on thermoelectric temperature transducers CHAIRMAN: Richard Bidstrup PUBLICATIONS: None DOCUMENTS BEING DRAFTED: No recent activity. May need redefinition of objective to avoid duplication with ANSI ASTM and SAE committees.
ISA-S37.10	SPECIFICATIONS AND TESTS FOR PIEZOELECTRIC PRESSURE AND SOUND-PRESSURE TRANSDUCERS	SCOPE: (See s 37.3) CHAIRMAN: Dave Keast (task complete) PUBLICATIONS: ISA-SP 37.10
SP 37.11	SPECIFICATIONS AND TESTS FOR SERVO ACCELERATION TRANSDUCERS	SCOPE: Prepare document on Servo Acceleration Transducers CHAIRMAN: Otis Ingebritsen PUBLICATIONS: None DOCUMENTS BEING DRAFTED: (a) ISA-SP37.11. This is a fairly new committee and work on the standard has just begun.
ISA-S37.12	SPECIFICATIONS AND TESTS FOR POTENTIOMETIC DISPLACEMENT TRANSDUCERS	SCOPE: Prepare document on Potentiometric Displacement Transducers CHAIRMAN: Robert Bronson PUBLICATIONS: None DOCUMENTS BEING DRAFTED: ISA-SP 37.12. Only preliminary work completed. Little activity since mid 1970.

ISA-S37.13	SPECIFICATIONS AND TESTS FOR HIGH-LEVEL Dc-OUTPUT PRESSURE TRANSDUCERS.	SCOPE: Prepare document for high level dc-output pressure transducers CHAIRMAN: Jon Inskeep PUBLICATIONS: None DOCUMENTS BEING DRAFTED: (a) Final draft in review.
ISA-S31	TURBINE FLOWMETERS	SCOPE: (See S 37.3) CHAIRMAN: Phil Bliss PUBLICATIONS: None DOCUMENTS BEING DRAFTED: Final draft with review summary is ready for balloting by Standards and Practices Board
ISA-S40	STRAIN GAGES	SCOPE: (See S37.3) CHAIRMAN: None - one is needed. No work currently under way.

SR;nl

JANNAF INTERAGENCY PROPULSION COMMITTEE

COMMITTEE ON INSTRUMENTATION AND TEST DATA

SCOPE: Currently, to review the state of the art of pressure transducers capable of detecting high frequencies.

CHAIRMAN: D.T. Harrje, Princeton University

PUBLICATIONS: CPIA Publication No. 170 "Special Considerations for Combustion Instability Instrumentation and Data Presentation", June 1968.

DOCUMENTS BEING DRAFTED:

(a) In 1972, a report listing the types of high frequency pressure transducers presently available and the types needed will be published.
(b) In 1973, the committee will review the mounting problems of these transducers.

At present there is no requirement for additional members.

RANGE COMMANDERS COUNCIL (RCC)

The Range Commanders Council has published numerous IRIG Standards for use by governmental agencies and industries under contract to them for use in the fields of missiles, rockets, and associated equipment. Limited copies are available to authorized non-government agencies from the Secretariat, Range Commanders Council, STEWS-SA-R, White Sands Missile Range, New Mexico 88002. Documents related to physical measurements include: IRIG: 106-71 Telemetry Standards; IRIG 118-71 Test Methods for Telemetry Systems and Support Systems; IRIG 103-64 Methods for Estimating Accuracy of Position, Velocity and Acceleration Data. Additional documents are being considered at this time.

SAE AEROSPACE COUNCIL of the SAE TECHNICAL BOARD
SOCIETY of AUTOMOTIVE ENGINEERS

E-21 DESIGN AND GENERAL STANDARDS FOR AEROSPACE PROPULSION SYSTEMS

PURPOSE: The committee E-21 will assess the design, manufacture, operation and maintenance of Aerospace Propulsion Systems; such assessment has the objective of identifying specific areas that require or benefit from standardization. The committee has the further purpose of assuring that the necessary standards are developed, coordinated, documented and released. Professionalism, technical integrity and general quality of technical documents will be adhered to.

CHAIRMAN: A. H. Lamber, Air Force Rocket Propulsion Laboratory (DOZS) Edwards, CA 93423 Ph (714) 553-2139-2739

SPONSOR: Society of Automotive Engineers, Inc.

PUBLICATIONS: None relating directly to transducers. Numerous other documents have been issued.

DOCUMENTS BEING CONTEMPLATED: Consideration underway for turbine engine thermocouple probe check. Periodic ground checks of the temperature sensing systems employing the use of portable heater ovens that can be installed over the engine thermocouples to check operation and accuracy. Project effort yet to be determined could be accomplished by SAE Committee E-21, SAE Committee EG-1 Aerospace Propulsion Systems Support Equipment of SAE subcommittee AE-2 Engine Temperature Sensing.

SUBCOMMITTEES AND WORKING GROUPS: SAE Subcommittee AE-2, Engine Temperature Sensing. Working panel on optimum metric threads for Aerospace Fastener Systems. Members of Committee E-21 are limited to individuals of the Prime Aerospace Propulsion Communitiy. Individuals qualifying as such and interested in participating in the committee activity may contact the chairman.

AE-2 ENGINE TEMPERATURE SENSING

SCOPE OF THE SUBCOMMITTEE:

1. To maintain a samll, highly restricted body of men experienced in the problems associated with engine temperature sensing.
2. To expedite the exchange of technical information through the sponsorship of meetings, publications and bibliography work.
3. To formalize and correlate the collective experience in the form of Aeronautical Information Reports (AIR).
4. To develop preliminary standards where practical and publish them for industry wide availability in the form of Aeronautical Recommended Practices (ARP).

CHAIRMAN: W. J. O'Brian, Detroit Diesel Allison Division of General Motors Corp.
P. O. Box 894, Indianapolis, Ind 46206

PUBLICATIONS:

Aerospace Information Reports (AIR)
AIR 46, "Preparation and Use of Chromel Alumel Thermocouples", 1956
AIR 65, "Thermoelectric Circuits and The Performance of Several Aircraft Engine Thermocouples" 1968
Aerospace Recommended Practices (ARP)
ARP 464, "Thermocouple Mount", 1958
ARP 465, "Thermocouple Mounting Flange", 1.500 in Centers", 1958
ARP 466, "Thermocouple Mounting Flange 1.875 in Centers", 1958
ARP 485, "Nomenclature for Temperature Measuring Devices", 1957

DOCUMENTS BEING DRAFTED: Rewrite and combining of AIR 46 and AIR 65

DOCUMENTS BEING CONTEMPLATED: Possible survey of infra-red sensing of turbine temperatures for control

The chairman will consider the addition of qualified new members to the subcommittee.

SCIENTIFIC APPARATUS MAKERS ASSOCIATION (SAMA)

The Scientific Apparatus Makers Association is active in the generation of standards and specifications for scientific instruments and related products, as well as data related to the scientific instrument industry. SAMA has several standards committees active at present. Publications are available from: Scientific Apparatus Makers Association, 1140 Connecticut Avenue, N.W, Washington, D.C. 20036.

SAMA Publications in the area of transducers include:

SAMA: II 1 & 2 Load Cell Terminology and Recommended Test Procedures, 2nd edition, 1964

RC 5-10 "Resistance Thermometers, 2nd edition, 1963

SAMA: RC 8-10 "Thermocouple Thermometers (Pyrometers), 2nd edition, 1963

SAMA: RC 20-11, Measurement and Control Terminology, 1964

SAMA: RC 21-4-1966, Temperature-Resistance Values for Resistance Thermometer Elements of Platinum, Nickel and Copper, 1966

INTERNATIONAL STANDARDIZATION

INTERNATIONAL ORGANIZATION FOR STANDARDIZATION (ISO): The American National Standards Institute is the Member Body representing the United States in the International Organization for Standardization (ISO). Fifty-six national standards bodies comprise the world membership and cooperate in formulating the technical program in which each member maintains a status as a participant or observer in accordance with the interest of the members in the specific standard under consideration.

INTERNATIONAL ELECTROTECHNICAL COMMISSION (IEC): The American National Standards Institute has administrative and technical affiliation with the U.S. National Committee of the IEC. This committee, in turn, represents the U.S. in the IEC. The IEC holds the international responsibility for the coordination and unification of all national electrotechnical standards and it is affiliated with the ISO. It also acts as the coordinating body for the activities of other international organizations whose responsibilities relate to or overlap the electrotechnical field.

DISCUSSION SUMMARY

SESSION III

Dynamic and Static Testing and Calibration

Papers: Rathke and Woodward; Gordon and Clark; Keshock, Stewart, Edwards; Rockwell and Rogero

Highlights of the Discussion Period:

Questioning the need for end-to-end calibrations in only a few responses. In some tests of parachute recovery systems, strain transducer telemetry systems are checked by the application of known forces to transducer, and by monitoring the resulting ground station output. A rocket test facility has their instrumentation system under computer control. Transducer calibration is stored in the system and used for data reduction. Elaborate statistical procedures are used to verify accuracy. Naval Air Test Center uses a model of the transducer (based on the laboratory calibration of the transducer). This analog model, simulating transducer input and output impedances, at various measurand levels, is then used for an end-to-end calibration of instrumentation system (including dynamic calibrations using an electrical function generator). At present, models exist for resistance bridge transducers. The desire was expressed for the manufacturer to supply the parameters necessary to model his transducers.

In another system, used in ordnance testing an electrical check is performed immediately preceding each shot. Means used are series or shunt resistance changes or voltage injection, depending on the type of sensor. Another organization uses a six wire system, enabling them to switch known resistors across an arm of a bridge to simulate a known measurand change. This approach, it was pointed out, is not very practical for nuclear or high-explosive tests in view of the long cables involved. Also, in such tests, the transducer cannot be recovered and check calibrated after the test.

It was pointed out that in a procedure like a shunt calibration, a dynamic check of the system can be obtained if the shunt resistor can be switched in rapidly and cleanly (without contact bounce).

The need for assurance of transducer quality immediately prior to and even during measurements, was emphasized by recent developments in medicine. In cardio-vascular research, small pressure transducers are permanently implanted in research animals for periods of up to a half a year. It seems important to be able to assess continuing adequacy of transducer performance during this time span.

Complaints were voiced by some vendors about overly detailed required performance specifications, without adequate time for the vendors careful study of them. In addition, some of the specifications require tests by the manufacturers and test documentation, which he

cannot supply adequately and economically. The lack of proper communication between vendor and user seems to cause many misunderstandings and mis-interpretations of user requirements and specifications.

An argument over who should lead the way in developing universally understandable specifications and standards for transducers, was not resolved. Manufacturers and users representatives each argued that they should have the responsibility.

A point raised by a vendor was that a users specification should not only list what the transducer should do but also what it should not do (eg. not susceptible to certain specified operating environments.

A question was asked whether there was a good central source of information on tests run on many different transducers. It was suggested that it is probably desirable to re-test some transducer types periodically to evaluate the effects of new materials and new production techniques. A comment was made that if a government agency took the responsibility for the extensive testing of transducers, the manufacturers could then refer users to that agency for information on the transducers performance (editors comment: "Consumers Union"?). One possible drawback might be posed by the fact that a government agency is not likely to be permitted to compare the quality of the products of different vendors, nor indeed to make any value judgements. It was indicated that telephone inquiries could produce a less inhibited response than those obtained from printed official reports.

In fact, there was a Defense Department sponsored Transducer Information Center at Battelle Memorial Institute which kept up effectively with transducer research, development, and evaluation efforts. Not being a government agency, it had access to proprietary information. It was difficult to obtain continuing funding for it throughout its existence. Finally, DOD produced a set of operating instructions for the Air Force (sponsoring agency of the TIC) including: unlimited funding, no restrictions on service or customers, no discontinuance of center without special permission. These conditions were unacceptable to the sponsor and the center was closed.

Finally on the subject of dynamic calibration, the question was raised whether results from such calibrations are used to correct the measurement data or simply to select a suitable transducer. An argument for static calibration as being sufficient was countered by several persons. They pointed out the extreme difficulty of predicting the dynamic response of a transducer without actually dynamically testing it.

SESSION IV

MANUFACTURERS' PANEL DISCUSSION

Mr. Peter Stein, Chairman, Arizona State University

DISCUSSION SUMMARY

SESSION IV

Highlights of the Discussion:

This session was entirely a discussion session for dialog between transducer "users" and "manufacturers." A manufacturers' panel representing typical types of instruments in common use on test ranges was assembled as follows:

Dr W Kistler	Kistler Instruments
Mr J Kicks	Kulite Semiconductor Products
Mr J Maybach	Rosemount
Mr R Whittier	Endevco
Dr H Erichsen	Tyco Instruments
Mr S Cox	Bell & Howell Instruments

The audience also included other representatives from these companies and representatives from PCB Co, General Electric and Cetra Systems Inc.

Measurement parameters represented include pressure, temperature, acceleration, vibration, shock and flow. Measurement methods represented primarily included strain gages, piezoresistance, piezoelectric, servomechanism force balance, capacitive, thermoelectric, and thermoresistive.

This discussion was chaired by Mr P K Stein, Instrumentation Consultant, Arizona State University. The discussion was lively and continued for three hours. Full reporting is neither desirable or possible; the major areas of discussion are summarized below. The discussion was considered quite beneficial by a sampling of both users and manufacturers.

Discussion topics included:

1. Specification Sheet Parameters

   a. Believability - Buyer specify tests

   b. Missing Parameters - Some data available if requested

   c. Transient or Time Varying Tests - Not normally tested; no standards

   d. Combined Environments - Not normally tested; no standards

e. Statistical Model - Spec numbers are supposed to be "two-sigma" type numbers

2. Price Information

a. Generally not routinely supplied; strong desire expressed

b. Trend seems to be to include at least an approximate price

3. Product Improvements

a. Routinely made by manufacturers

b. Not publicized

c. Can cause problems (e.g. new epoxy may improve bond but react with gas being measured)

4. Quality of Local Representatives

5. Manufacturer Involvement in User Application

a. Contractor desires involvement

b. Cannot provide $1000 worth of consultation on use of a $50 transducer

c. Involvement nearly illegal for government situations

d. Purchase Order should indicate intended use in addition to performance specifications

6. Relationships if a transducer fails to perform

a. Manufacturer eager to evaluate and diagnose the problem

b. Failed instrument should be recovered if possible

c. Highly competitive business; word of failure circulates fast

7. Delivery time (6 weeks for "Standard" Items)

a. Can build in 1 week but must then stabilize, cycle and test

b. One company canvassed users' needs, stocked inventory accordingly for quick delivery, and subsequently absorbed a million dollar loss.

8. Quality Control

a. User reports: 15% rejection on the dock as received due to damaged housings, nicks, scratches, cut wires, leaks, bent connectors, etc

b. Manufacturers: No excuse for shipping shoddy hardware

9. Interchangeability - Transducers and Electronics (Use of one manufacturer's sensor with another manufacturer's electronics)

a. Not generally feasible

b. One manufacturer's response: It is not in the manufacturer's interest from his point of view to do this. We like to price our products as a set of equipment.

c. Strain gage and semiconductor sensors are somewhat interchangeable with increased risk of errors.

SESSION IV-a

QUICKIE PAPERS: NEW TECHNIQUES

STANFORD RESEARCH INSTITUTE
Menlo Park, California 94025 · U.S.A.

PIEZORESISTIVE TRANSDUCERS FOR MEASUREMENT OF TRANSIENT DYNAMIC STRESS

By

D. E. Grady, M. J. Ginsberg, and D. R. Curran

Abstract

New applications have increased the demand for piezoresistant transducers capable of measuring transient dynamic stress. Applications include stress measurements in various geological media *in situ*, in high radiation environments under adverse temperature conditions, in experiments involving highly divergent material flow, and measurements of stress history in materials subject to intense pulsed laser beams. Gages are required to measure stresses from as low as a fraction of a kilobar to many kilobars for times ranging from a fraction of a microsecond to a number of milliseconds. New piezoresistant materials have been investigated for applications to these problems. Considerable progress in transducer and systems technology has been made.

INTRODUCTION

Piezoresistant stress transducers consist of a foil or film of some material whose electrical resistance is a function of its state of strain, and can be related to stress or pressure by suitable calibration techniques. Originally, these gages were developed to measure static pressures in hydrostatic loading experiments, but were then modified so that measurements of dynamic stress up to several hundred kilobars were possible. The rise times associated with these stress waves is typically considerably less than a microsecond, and pulse widths are usually ten microseconds or less. Recently, there has been a considerable amount of interest in measurement of transient stresses of much lower magnitude and often with longer pulse widths. Rise times of interest range from nanoseconds to about a millisecond.

Piezoresistant stress transducers can have the following important features:

(1) The ability to be actually placed in the material of interest, so that disturbance to the flow is minimized (these gages are usually referred to as "in-material gages").

(2) Small size

(3) Low temperature sensitivity

(4) Good signal-to-noise ratio

(5) Fast response (as low as 10 nsec in some cases)

(6) Ability to survive in extremely hostile environments for sufficient time to make the measurements of interest.

Stanford Research Institute has been concerned with the development of piezoresistant stress transducers for over ten years, and this paper describes some of the results of that effort. A brief background review presents the framework which has guided piezoresistant transducer development over the

past decade. Investigations of different piezoresistant materials are discussed, and current programs which have created the increased demands on transducer usage are considered along with the technology necessary to meet the problem.

BACKGROUND

The behavior and properties of materials that have been subjected to intense dynamic loading have been the subject of a large number of investigations. Both the transient behavior and the terminal (postshock) effects have been of interest. The extremely high stresses involved have usually been produced either by explosives or by compressed gas guns (Fowles et al., 1970) which propel a flat-faced projectile against a planar target. With explosives, workers in this country have obtained pressures as high as 3 megabars (Rice et al., 1958) while Russian investigators have reported reaching 10 megabars (Al'tshuler, 1965). Some compressed gas guns are capable of producing pressures in the target above a megabar, but most are designed to produce stresses in the range of one to 100 kilobars (lasting for several microseconds) in targets which are usually between two and four inches in diameter. It is in this lower stress region that material strength significantly affects dynamic response, and research in this area is very active.

Determination of high pressure equations of state and the effects of high stresses and strain rates on, for example, the magnetic, electrical, and mechanical behavior of materials has been the motivation for this type of work. There is also considerable interest in the stress wave propagation itself. Determination of the mechanical constitutive equations, which can be used in conjunction with computer codes to predict dynamic response to

arbitrary stress wave inputs, provides understanding of many aspects of the mechanical behavior of materials.

The measurement of transient stress-time histories is crucial to work of this nature. Considerable effort over the past decade has focused on this problem, and a large part of this effort has been expended in development of in-material piezoresistive stress transducers.

Various compressed gas gun installations differ in detail but their purpose is the same. They use high pressure gas to propel a projectile of known material properties against a target containing the material sample of interest. The impact is planar and produces a stress wave which propagates through the material in a time duration of several microseconds. This process is illustrated in Figure 1 where a typical projectile and target design geometry are shown. In the sample one or several peizoresistant gages are embedded at different planes but the plane of each gage is normal to the direction of wave propagation. Each gage will record the stress-time history of the material at the plane in which it is mounted. A record obtained with a manganin piezoresistant gage in 6061-T6 aluminum is shown in Figure 2. In Figure 3, results from several gages located at different gage planes illustrate how the stress wave structure changes with propagation distance in the test sample. These multiple stress gage measurements are then compared with profiles predicted by finite difference computer codes to verify various material constitutive models. More recent work has shown that the multiple stress histories can be analyzed by a method presently known as Lagrangian analysis (Fuller and Price, 1964; Fowles and Williams, 1970; Cowperthwaite and Williams, 1971) to determine actual stress-strain paths which can then be used to determine a constitutive relation for the material.

Details involved with in-material stress gage installations are many. The difficulties are largely determined by the pecularities of each individual experiment. Much research has been done on this problem and is well documented (Keough, 1968; Keough and Williams, 1967). Both wire and etched foil gages are used, and in some cases vapor-deposited elements which provide a thinner transducer package and, therefore, high frequency response. An epoxy resin is normally employed to make the in-material bond.

Excitation of the transducer requires either a constant current source (Keough, 1968; Grady, 1970) or a constant voltage or bridge source (Keough, 1963). The frequency response required for the dynamic transient measurement prohibits use of any ac excitation source. Lead configuration poses special problems. Depending on the power supply used either two or four leads must be brought from the gage to an accessible point. The primary problem is lead survival in the very high stress region experienced by the gage. A typical gage configuration is shown in Figure 4, where a vapor-deposited gage is mounted in-material in a soda-lime glass medium.

Manganin is a material well suited for dynamic stress measurements. It is relatively insensitive to temperature effects, is well calibrated and has been used in laboratory experimentation for a number of years (Bernstein and Keough, 1964; Fuller and Price, 1964). It is, however, difficult to use at low stress, in divergent flow, and in high radiation environments. It is this type of problem which has stimulated further investigation of new piezoresistant materials and techniques.

Dynamic calibration of piezoresistant gages poses special problems. Testing is destructive and therefore stringent quality control and standardization must be prescribed in gage and package material in order that calibration performed on one gage may be assumed for the next. The calibration is necessarily statistical in nature. Calibration for stress

loading and unloading is provided by subjecting a gage to a series of pressure steps of known amplitude. This calibration is usually performed with the compressed gas gun and necessarily restricts calibration data to the microsecond region.

Calibration can also be performed statically. Flatness of frequency response in the intermediate region is assumed if there is consistency between the static and dynamic calibration data. Most piezoresistant materials are observed to exhibit a residual resistance change when subject to a dynamic pressure pulse and then relieved to zero stress. This effect has been attributed to work-induced damage and complicates the unloading calibration.

NEW MATERIALS

Changing interests and emphasis have required the development of new types of piezoresistant stress gages. Some of this change has been brought about by better understanding of the material properties that affect the wave propagation constitutive relations. For instance, in *in situ* geological material, workers have become aware of the fact that macroscopic cracks, rock inhomogenieties, water content, and other factors difficult to duplicate in the laboratory environment, significantly affect the propagation and attenuation of ground motion (Grine, 1971). Because of this, experimental emphasis has shifted to the problem of making measurements in the field, and new and severe requirements have been impressed on stress transducer systems. Gages must often record down to the kilobar or subkilobar region. The system must survive for a number of milliseconds and drive thousands of feet of transmission cable in a high noise environment. Recent experimentation on material subject to severe radiation in horizontal line of site (HLOS) pipes in nuclear underground testing has posed other difficult problems for stress transducers. These problems appear in terms of gage

survival and temperature sensitivity. Other fields of recent interest include stress wave propagation due to deposition of energy from pulsed lasers at material surfaces and use of stress gages in divergent flow fields.

To summarize, recent experimental interest in transient wave phenomena require stress transducers amply sensitive at lower stresses, capable of longer recording in severe environmental conditions, and capable of surviving in high radiation regions under adverse temperature conditions. At Stanford Research Institute efforts have been focused on development of transducer packages and systems, and on the investigation of new materials to meet these problems.

Selected materials investigated are listed in Table 1 along with material properties that are significant in transducer operation. Also listed is the alloy manganin. Although manganin is marginally sensitive in the low kilobar region it is the best calibrated and is used routinely for transient stress wave experimentation in a number of laboratories. It serves as a standard for comparison of other potential transducer materials. Semiconductor materials have not been considered because of their known sensitivity to temperature and shear components of stress.

As is expected, a universal transducer material capable of satisfying all of the requirements for all situations probably does not exist. For sensitivity ytterbium appears to be the best, followed closely by lithium and calcium. They have pressure coefficients on the order of 20 and 10 times that of manganin, respectively. On the other hand, for use in a high radiation environment the atomic number is a crucial property. Heating is determined by the opacity of the material to radiation, and the opacity is strongly dependent on the atomic number. From this perspective carbon and

lithium are promising. Temperature dependence is determined by specific heat, density, sensitivity of the temperature coefficient of resistivity and sensitivity of the pressure coefficient to temperature change. Convenience in handling is an important factor. Ytterbium and bismuth are relatively inert while calcium and lithium are chemically active materials, which create considerable problems during transducer construction.

It can be seen that there are a number of trade offs. The gage material must be chosen to best satisfy the requirements of each individual experiment. Piezoresistant materials which have been studied in this laboratory will be discussed briefly. References are given for more detailed information on this work.

Ytterbium

Of the new materials investigated to date this stable rare earth has proven the most promising (Keough, 1970; Ginsberg, 1971). It has been calibrated for stress wave loading and is currently used for both laboratory and field testing. It has the highest pressure coefficient of resistance although its pressure resistance curve is nonlinear. It is useful from the subkilobar regions up to 39 kbar at which point it is reported to undergo a polymorphic phase transition (Hall and Merrill, 1963). Both vapor-deposited and etched foil gages have been used. It exhibits resistance hysteresis on the unloading portion of the pressure profile. Ytterbium is presently being calibrated on unloading. Other than manganin, it has the least sensitivity to temperature effects.

Bismuth

This element is also stable and exhibits a nonlinear pressure resistance curve up to 26 kbar at which point it undergoes a polymorphic phase transition. Vapor-deposited gages can be made quite readily. Static and limited dynamic calibration data are available (Keough, 1970).

Lithium

This low Z element has shown many promising properties favorable for transducer use. Its pressure sensitivity is larger than most. It exhibits some hysteresis on unloading. Substantial calibration has been performed on lithium (Keough et al., 1968), but its high chemical activity makes it difficult to handle. It can be vapor deposited provided the deposition substrate is treated with either LiF or MgF_2 as a surface passivator. It is also inert to paraffin wax which has been used as a sealant. Its low melting point limits its usefulness--it is expected to melt under shock compression at about 70 kbar.

Calcium

Calcium is also quite active and requires similar passivator and sealant techniques. It appears to show little hysteresis but its temperature sensitivity is close to prohibitive. There are limited calibration data (Williams, 1965).

Carbon

This material appears very promising. It can be readily vapor deposited on a number of substrate surfaces, these deposits having an amorphous structure. It is presently being calibrated and should be useful as a high radiation environment stress transducer (DeCarli, Ginsberg, and Dempster, 1972).

Others

Several other materials have been investigated for use as dynamic piezoresistant transducers with limited or no success. Strontium is extremely active and a passifying agent was never found (Keough, 1970).

Several iron-nickel alloys have been investigated (Williams, 1965). Their response was low due, presumably, to ferromagnetic properties. Lead and indium showed insufficient piezoresistant sensitivity and cadmium showed showed large but very erratic response (Williams, 1965).

Of the newer piezoresistant materials investigated, the most promising appear to be ytterbium and carbon and possibly lithium in a limited region.

TRANSDUCER APPLICATIONS

Fielding

As was previously mentioned, there is a significant effect of macroscopic material properties on wave propagation in geological materials in the sub-kilobar to 10 kbar region. Realistic experimental data must be provided by gages placed *in situ* near high explosive and nuclear underground tests to verify present geological constitutive models and computer predictions. SRI has recently developed a hardened ytterbium gage field system capable of recording in earth mediums such as rocks, soil, sands, or clays. This gage system is able to record in the 30-kbar to subkilobar region for a number of milliseconds and can be placed in the often hostile water-saturated environments weeks prior to transducer use (Smith et al., 1971; Smith, 1972).

A representative gage package is shown in Figure 5. The sensor consists of a 2-mil etched ytterbium foil grid of 10 ohms resistance. Lateral dimension of the grid is approximately one inch. The transducer element is contained in a homolite resin-fiberglass package. This package has been found extremely tough, and the fiberglass tends to prevent punch-through from local inhomogeneities in the test medium and to average out the stress in the vicinity of the sensitive element. Design of the package and cable connections provide minimum differential motion between gage components and, therefore, maximum survival probability of the gage.

Installation procedure at the test site is determined by the test medium and any experimental peculiarities. In hard material the gage is emplaced in drill holes and packed with impedance-matching grout. In softer material, cutting tools can be used to provide slots for gage installations.

Usually several hundreds to thousands of feet of transmission cable are required and the noise environment is high. With a pulsed bridge power supply and the high sensitivity of ytterbium, the system provides ample signal magnitude--usually several volts.

This stress gage system has been used with considerable success on high explosive tests ranging from 100 lb to 100 tons charge weight. In Figure 6 a gage record obtained in water-saturated sand from a 100-lb explosive event is shown. A peak stress of 6 kbar was reached, and the transducer recorded for about half a millisecond showing a complete stress-time history from arrival to peak stress and back to zero stress.

It is worth mentioning that in explosive testing a one-dimensional flow field is not always experienced by the gage. For instance, close in to an explosive source there is spherically divergent flow which subjects the gage element to stretch. With the large pressure coefficient of resistance of ytterbium the stretch effect is a small portion of the gage factor in most test situations. This is not true for manganin where the divergence effect can be a substantial contribution to the gage factor (Keough et all, 1971). This effect is not completely prohitive, however. If the divergent flow is known, adequate calibration can be obtained. At SRI miniature manganin gages (active area = 1 sq mm) have been successfully developed for quality control in testing of blasting caps (Rosenberg, 1972). The stresses were over 100 kbar and the flow field was highly divergent.

High Radiation Environment

Testing of the effect of radiation deposition on materials is currently performed in HLOS pipes in nuclear underground tests. Of interest is the mechanical response and blowoff phenomenon associated with the deposition process aimed, ultimately, at understanding survival ability of the test material. In-material stress-time history is required. The primary criterion of a stress transducer performing in this environment--transparency to the incident radiation--is necessary so that the deposition profile in the test material is not affected and so that destruction of the stress gage element is prevented. This criterion is satisfied if the gage material and associated leads are constructed of material with low atomic number.

Carbon with an atomic number of 6 appears promising as a piezoresistant material for this purpose and is presently being investigated in this and several other laboratories (DeCarli, Ginsberg, and Dempster, 1972). Carbon can be vapor deposited on a number of substrates and 50-Ω gages can be made in realistic transducer dimensions. A stress record of a step input pulse is shown in Figure 6. From this record it appears that carbon shows no residual resistance on unloading. This fact would greatly simplify the calibration process, which is now being carried out.

Laser Deposition

In the area of lower stress measurements work is currently in progress which involves measuring the transient response of 6061-T6 aluminum to deposition from a pulsed laser. A 300-joule, 20-microsecond pulsed CO_2 laser capable of providing a 100-megawatt peak pulse is used. Stress pulses are produced in the aluminum with amplitude of 50 to 200 bars and with time durations of several microseconds. Small 12-Ω in-material ytterbium stress

transducers used with a constant current power supply have provided very good stress-time histories (Erlich and Colton, 1972). The temperature sensitivity of the ytterbium is noticeable at this low stress but is found not to be a serious problem. These tests were nondestructive and the system is potentially capable of repetitive dynamic measurements.

CURRENT TRENDS

Understanding the dynamic response of materials to impulse loading requires that the complete stress-strain path of a material element be known. Thus, in-material gage technology requires transducers capable of monitoring the total stress profile including loading, unloading, and multiple wave structure. Piezoresistant transducers are presently able to reproduce this structure, and, when properly calibrated, the gage response can be related to the stress history of the material.

Increasing demands for accuracy and precision require careful gage calibration in order to relate the measured resistance profile to the transient stress history of the material. Temperature effects are a source of complication. Joule heating occurs due to the dc current density in the necessarily small dimension gage elements. Shock heating occurs due to the adiabatic compression of transducer material and neighboring package and test material. The magnitude of shock heating differs between the gage and specimen materials, and heat will flow during the time of measurement. The temperature effect can occur either in the temperature coefficient of resistance or due to temperature dependence of the pressure coefficient of resistant and can create a complicated time-dependent gage factor.

Observation of permanent resistance change after stress loading and subsequent unloading suggests that there is hysteresis in the pressure resistance curve. This phenomenon requires that a different calibration factor be used for unloading than is used for loading. This problem naturally brings

forth the question of path dependence of the pressure-resistance curve. Does the resistance change associated with a given pressure depend on the path by which the gage reached this pressure? The gage may also be sensitive to the medium in which it is making the measurement. This medium can determine the path and can affect the amount of mechanical working occurring in the gage material.

These problems must be considered in the dynamic calibration process. They must be understood and corrected for or they must be eliminated. They are fairly well understood for the most part and are discussed in a considerable body of literature (see previous references). They are continually considered in the investigation of new gage materials and techniques.

Reduction or elimination of these problems would be of considerable value. Material properties, such as the temperature coefficient of resistance, the temperature dependence of the pressure coefficient of resistance, and the hysteresis effects might well be changed by introduction of impurities or material damage. Preliminary work suggests that ion implantation provides a reasonable means of controlling these effects. Impurity introduction reduces the temperature sensitivity while the implantation process causes considerable damage to the material structure. The latter would tend to nullify the damage created by the shock process during actual gage operation, and to reduce the hysteresis problem. This technique offers excellent possibilities in terms of reduction of calibration difficulties and improving gage operation. It should prove to be an active area of research in the near future.

The trend toward dynamic measurement at lower stresses should continue. There are unique problems associated with measurement in this region which must be solved. One such problem occurs because of the mechanical strength of the gage material and the material under test. At high stresses the elastic

limits of gage and package material are well exceeded and essentially hydrostatic pressure obtains. At lower stresses, the gage factor can be sensitive to the mode of deformation, due primarily to the tensor property of the gage material (true even for mechanically isotropic materials) (Barsis et al., 1970). This problem will affect the frequency dependence of the gage factor and increase the dependence of the transducer response on gage package material and the test media. Increased requirements for piezoresistant transducers usable in the low and subkilobar region will require further investigation of these problems.

REFERENCES

Al'tshuler, L. V., Soviet Phys. Usp (English Trans.) 8, 52 (1965).

Barsis, E., E. Williams, and C. Skoog, (1970), J. Appl. Phys., 41, 13.

Bernstein, D. and D. D. Keough, (1964), J. Appl. Phys. 35, 1471.

Cowperthwaite, M. and R. F. Williams, (1971), J. Appl. Phys. 42, 456.

Erlich, D. C. and J. D. Colton, (1972), Private Communication.

Fowles, G. R., G. E. Duvall, J. Asay, P. Bellamy, F. Feistmann, D. Grady, T. Michaels, and R. Mitchell, Rev. Sci. Instrum. 41, 984 (1970).

Fowles, G. R. and R. F. Williams (1970), J. Appl. Phys. 41, 360.

Fuller, P. J. A. and J. H. Price, (1964). Brit. J. Appl. Phys. 15, 751.

Ginsberg, M. J. (1971), Stanford Research Institute Final Report, Defense Atomic Support Agency, Contract No. DASA01-69-C-0014.

Ginsberg, M. J., P. S. DeCarli, and J. W. Dempster (1972), Private communication.

Grady, D. E. (1969). Rev. Sci. Instr. 40, 1399.

Grine, D. R., "Stress Waves in Rocks," in Shock Waves and the Mechanical Properties of Solids, J. Burke and V. Weiss, eds. (Syracuse University Press, New York, 1971).

Hall, H. T. and L. Merrill, (1963). Inorg. Chem. 2, 618.

Keough, D. D. (1963), Stanford Research Institute Final Report, Project 3713, Defense Atomic Support Agency, DASA No. 1414.

Keough, D. D. (1968), Stanford Research Institute Technical Report AFWL-TR-68-57.

Keough, D. D. (1970), Stanford Research Institute Final Report, Defense Atomic Support Agency, Contract No. DASA-69-C-0014.

Keough, D. D., C. W. Smith, and M Cowperthwaite (1971), Stanford Research Institute Final Report, Defense Atomic Support Agency Contract No. DASA01-70-C-0098.

Keough, D. D. and R. F. Williams (1967), Stanford Research Institute Techinical Report AFWL-TR-67-81.

Keough, D. D., R. F. Williams, and R. A. Pasternak (1968), Stanford Research Institute Final Report, Sandia Contract No. 18-5816.

Rice, M. H., R. G. McQueen, and J. M. Walsh (1958), In "Solid State Physics," Vol. 6 (Seitz and Turnbull, eds.), Academic Press, New York.

Rosenberg, J. T. (1972), Private communication.

Seaman, L., R. F. Williams, J. T. Rosenberg, D. C. Erlich and R. K. Linde (1969), Stanford Research Institute Technical Report No. AFWL-TR-69-96.

Smith, C. W. (1972) Stanford Research Institute Final Report, Defense Atomic Support Agency Contract No. DASA01-71-C-0081.

Smith, C. W., D. E. Grady, L. Seaman, and C. F. Petersen (1972), Stanford Research Institute Final Report, Defense Atomic Support Agency, Contract No. DASA01-70-C-0098.

Williams, R. F. (1965), Stanford Research Institute Final Report, Defense Atomic Support Agency, Contract No. DA-49-146-XZ-096.

Table 1

PHYSICAL PROPERTIES OF SELECTED PIEZORESISTIVE CONDUCTORS

Property	Lithium	Calcium	Manganin	Ytterbium	Bismuth	Units
Atomic No.	3	20	28.6	70	83	
Density	0.534	1.55	8.41	6.97	9.74	gm/cm^3
Resistivity	8.55	3.91	48.0	28	107	$\mu\Omega$ cm
Melting Point	179	851	1020	824	271	°C
Temp Coeff of Resistance	4.45	4.16	0.015	1.3	4.0	$x10^{-3}\Omega/\Omega$ °C
Pressure Coeff of Resistance at Pressure (kbar)						
Static	0.008(15)[a] 0.008(30)[a]	0.015(15)[a] 0.019(30)[a]	0.06(15)[a] 0.08(30)[a]	0.07(15)[a] 0.16(30)[a]	0.022(15)[a] 0.026(25)[a]	Ω/Ω kbar
Dynamic	0.0238[b] (0 to 55)	0.024[c] (0-30)	0.0029[d] (0-170)	0.087(10)[e]	0.035(10)[f]	Ω/Ω kbar
Transition Pressure				39.5 (25°C)	25.3 (25°C)	kbar
Specific Heat	0.83	0.156	0.097	0.03	0.029	cal/gm°C

a After Bridgman.
b Keough et al., 1968.
c Williams, 1965
d Keough, 1967.
e Ginsberg, 1971.
f Keough, 1970.

Figure 1 Shown are the important components involved in a compressed gas gun experiment. A projectile of known material makes planar impact with the sample target creating a state of high transient stress in the test material. Necessary electrical components and gage configuration are also indicated.

Figure 2 Record obtained with manganin in-material piezoresistive stress transducer. Time base is 0.2 μsec/cm. The peak stress is about 30 kilobars. The test material was 6061-T6 aluminum (Seaman et al.,1969). Both the elastic precursor and plastic wave can be seen followed by the unloading wave. Note the residual resistance after complete unloading.

Figure 3 Multiple stress profiles from gages located at different distances from the impact surface. This indicates the complexity of the response of the material to dynamic loading. Records such as these are used to verify constitutive models and computer code predictions of the behavior. Test material in this case is 2024-T8 aluminum (Seaman et al., 1969).

Figure 4 Shown is one method for installation of in-material stress transducers. The sensitive element in this case is vapor deposited and electrical leads protrude through the back of the test material. The test material shown is soda-lime glass. Many materials are investigated by this technique.

Figure 5 One configuration of a field stress gage. The ytterbium element is 3 mils thick and has a lateral dimension of approximately 1 inch. The total package length is about 8 inches. The package material is a fiberglass-homolite resin composite. The gage design is determined by the expected material flow in order to obtain maximum gage life time.

Figure 6 Stress record obtained with gage configuration shown in Fig. 5 Time base is 50 μsec/cm. Peak stress is 6 kilobars. Record was obtained in a 100 lb explosive test in water saturated sand.

Figure 7 Carbon gage record. Time base is 0.5 μsec/cm. Verticle sensitivity is 0.5 volts/cm.

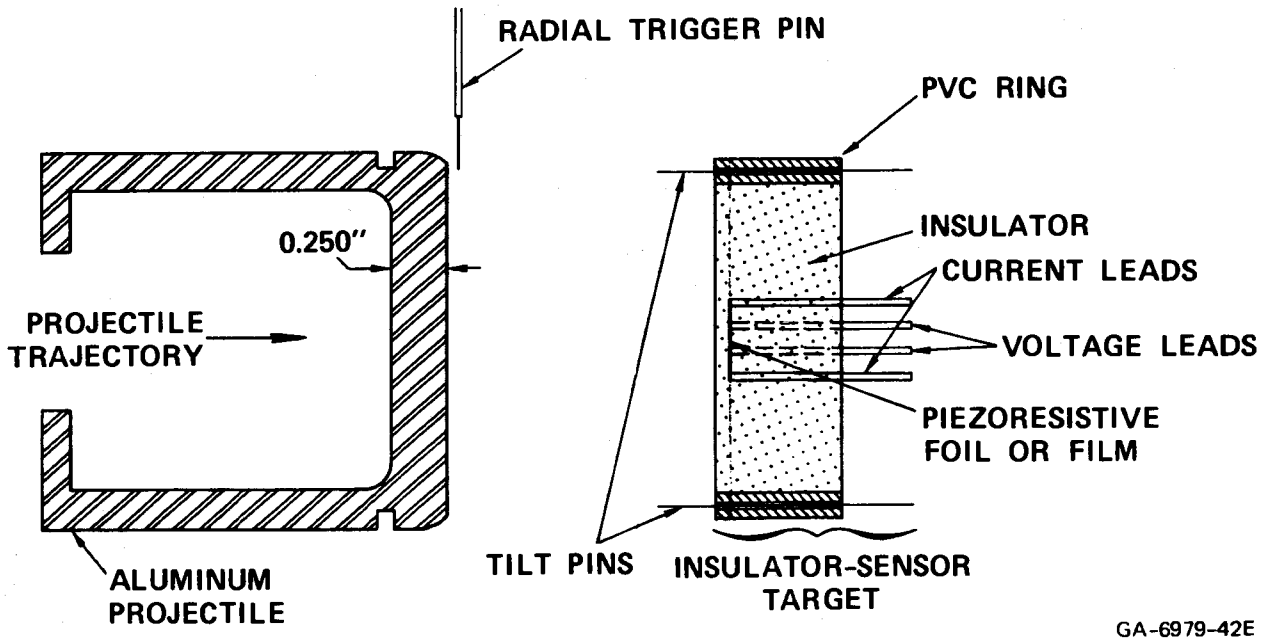
RADIAL TRIGGER PIN
PVC RING
0.250"
INSULATOR
CURRENT LEADS
PROJECTILE TRAJECTORY
VOLTAGE LEADS
PIEZORESISTIVE FOIL OR FILM
ALUMINUM PROJECTILE
TILT PINS
INSULATOR-SENSOR TARGET
GA-6979-42E

FIGURE 1

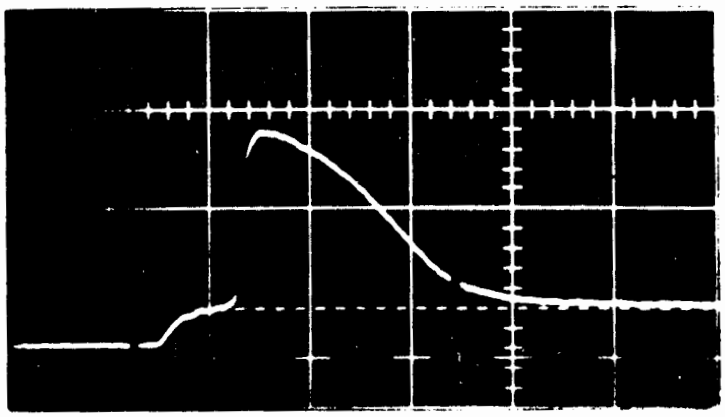

FIGURE 2

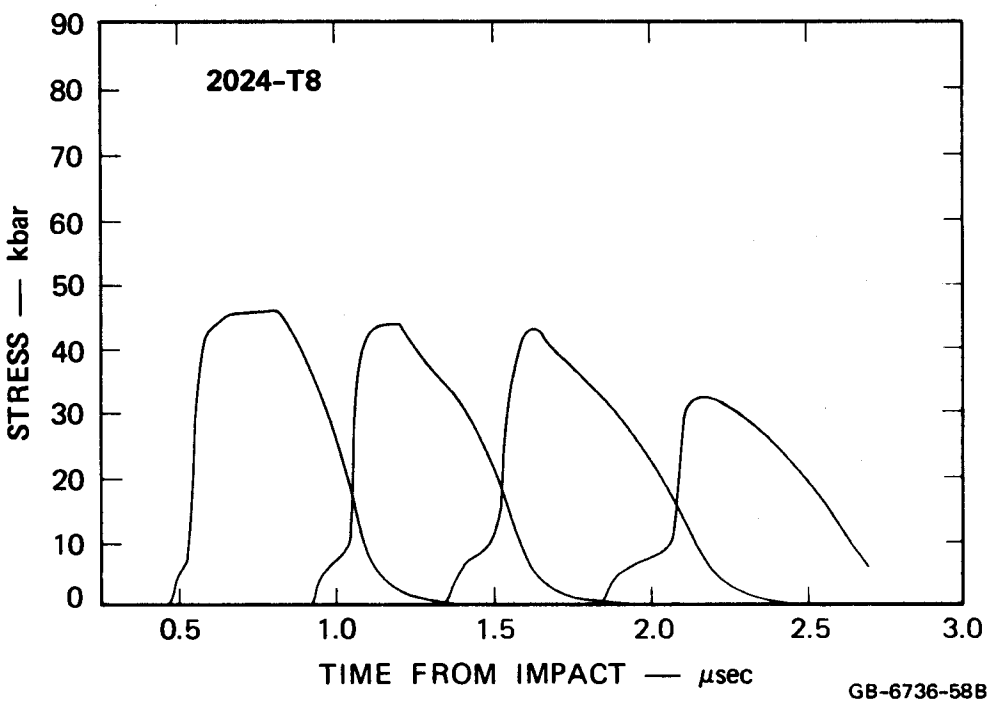
2024-T8
STRESS — kbar
90
80
70
60
50
40
30
20
10
0
0.5
1.0
1.5
2.0
2.5
3.0
TIME FROM IMPACT — μsec
GB-6736-58B

FIGURE 3

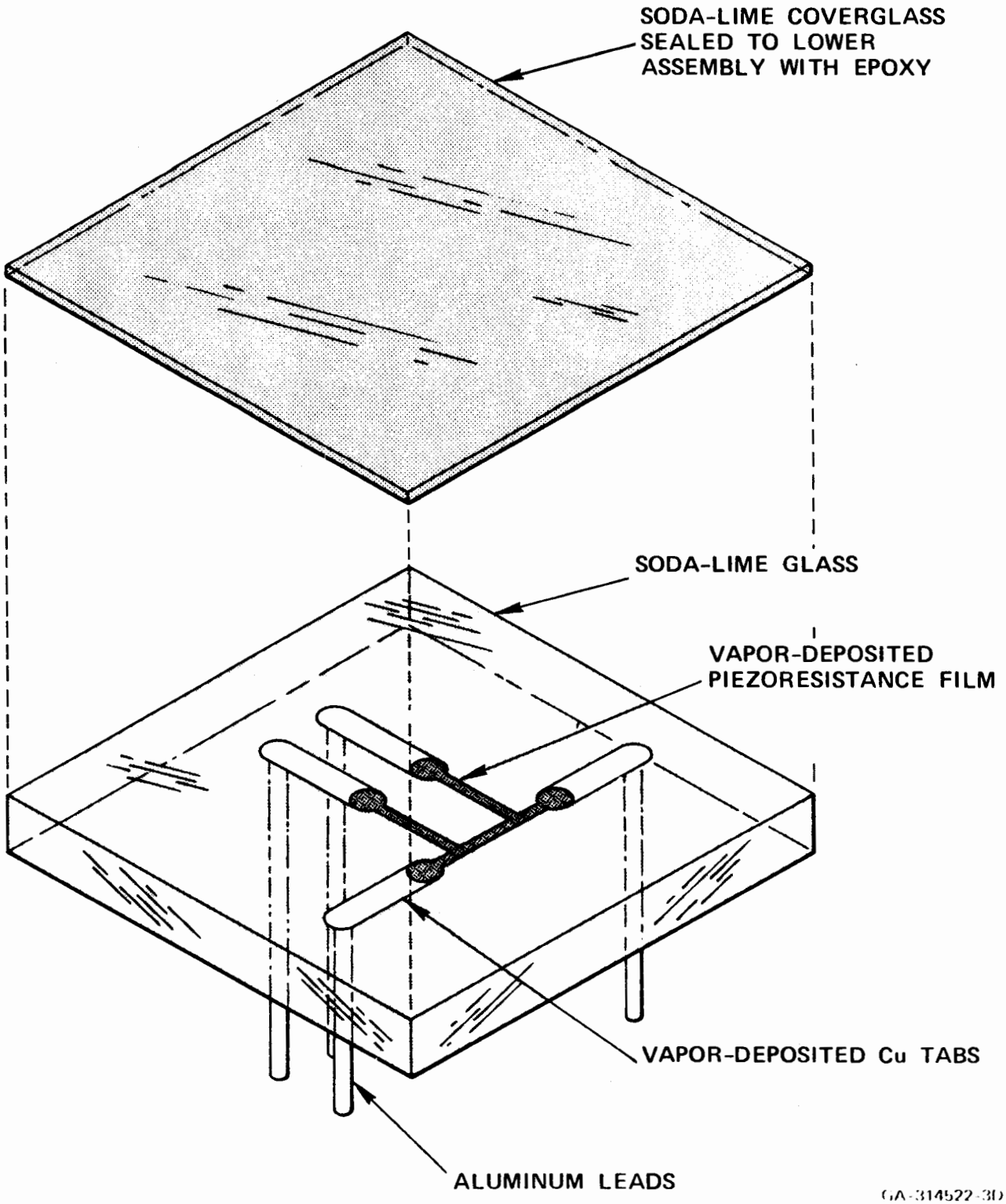
SODA-LIME COVERGLASS
SEALED TO LOWER
ASSEMBLY WITH EPOXY
SODA-LIME GLASS
VAPOR-DEPOSITED
PIEZORESISTANCE FILM
VAPOR-DEPOSITED Cu TABS
ALUMINUM LEADS
GA-314522-3D

FIGURE 4

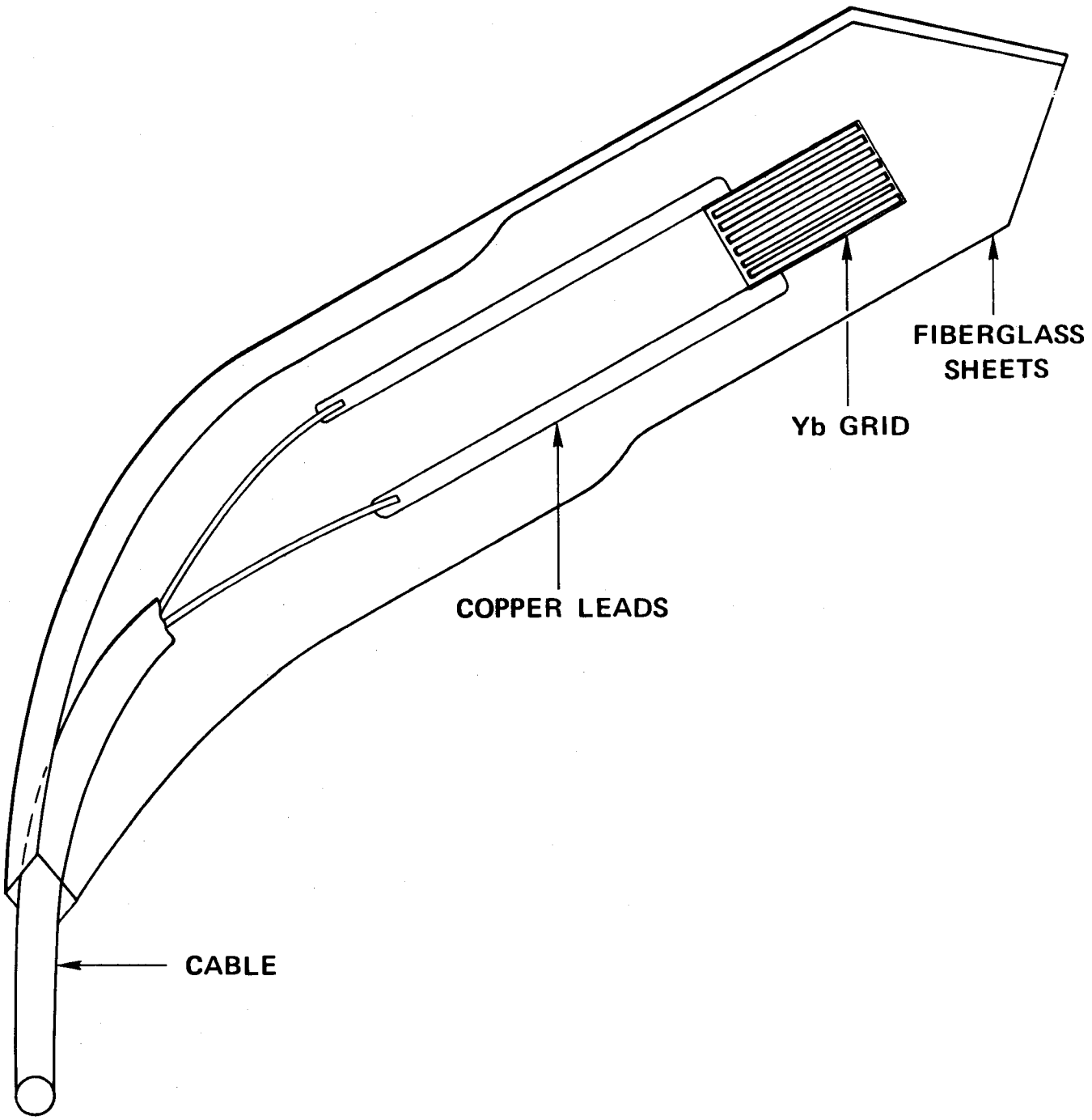

GA-8567-72A

FIGURE 5

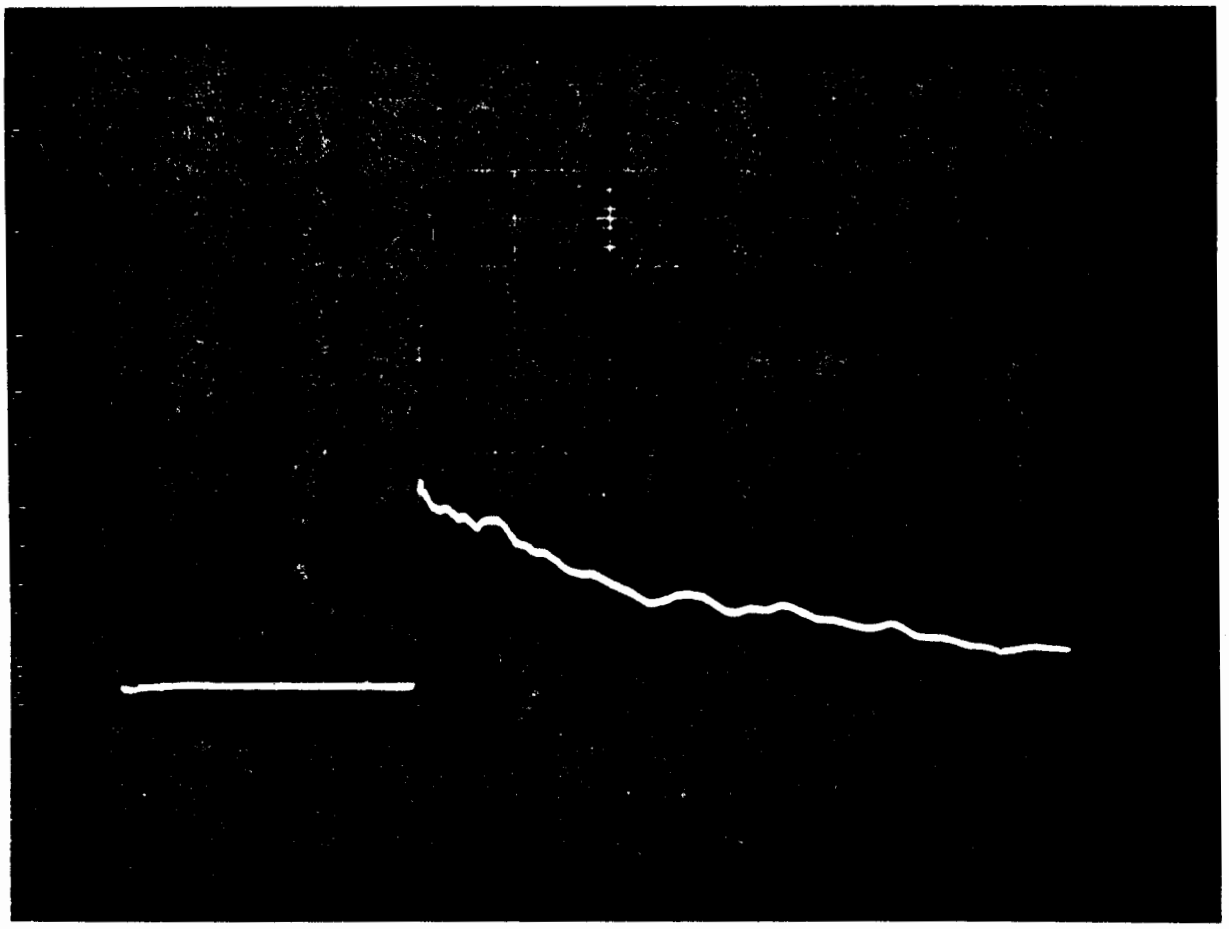

MP-314524-1

FIGURE 6

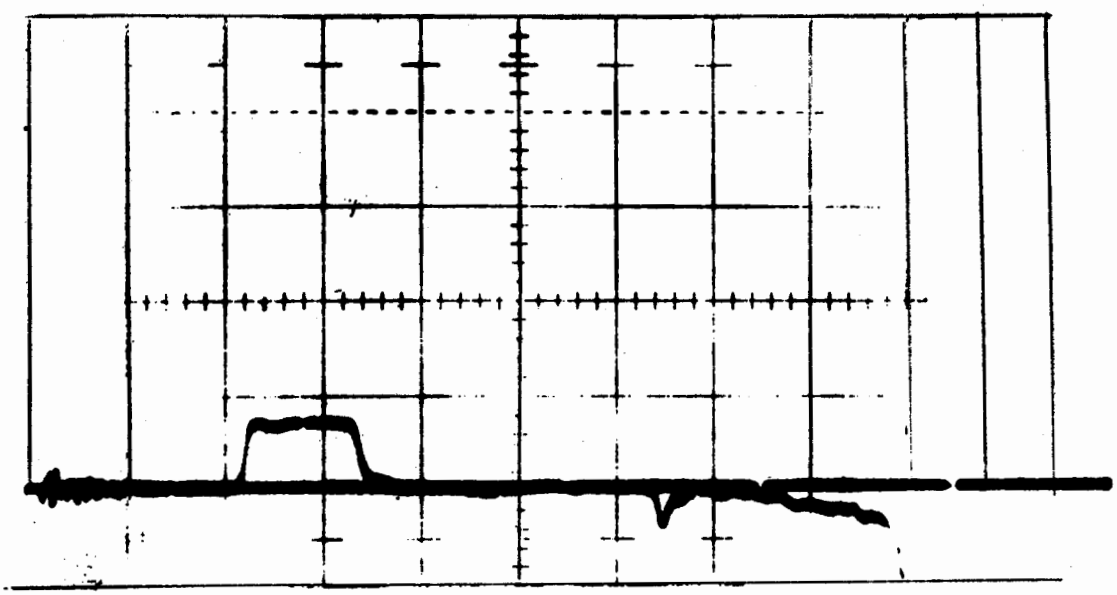

MP-314524-2

FIGURE 7

ON OPERATION OF HIGH WORKING PRESSURE DIFFERENTIAL PRESSURE TRANSDUCER

by

L. D. Worster, P.E.
Senior Engineer
Plant Instrument Engineering
DOUGLAS UNITED NUCLEAR, INC.
Richland, Washington

ON OPERATION OF HIGH WORKING PRESSURE DIFFERENTIAL PRESSURE TRANSDUCER

INTRODUCTION

The differential pressure transducer operation, maintenance and calibration techniques discussed below were developed in our six years operation of the 1003 channel coolant flow monitor at the Atomic Energy Commission's N Reactor at Richland, Washington. The 1003 differential pressure transducers in the system include three ranges - 0-20, 0-28 and 0-35 psid. The system working pressure is 1600 psig.

OPERATING EXPERIENCE

Experience with the above system has shown that differential pressure calibration at low base pressure is not adequate to verify performance of the transducers. After two to three years of operation, some of the transducers were found to exhibit a high pressure characteristic shift which could not be detected in differential pressure testing at base pressures below 400 to 500 psig. In most cases this shift was caused by loss of a portion of the bellows internal fill fluid. This internal fluid fill is required to permit the bellows to withstand the high working pressure while retaining the sensitivity to detect small differential pressures. Loss of the internal fluid results in a small void inside the bellows. As the working pressure increases beyond the bellows unsupported strength the gas filling the void is compressed and the bellows is distorted by an amount corresponding to the size of the void. As indicated above, because of the physical strength of the bellows the threshold for this distortion is 400 to 500 psig.

The fill fluid is lost through leakage through failed "O" rings or through very small (pinhole) leaks in bellows. From the vendor's experience "O" ring aging affect failures begin to accelerate after 4 to 5 years of operation. In some cases, however, no signs of leakage were observed upon disassembly of transducers exhibiting the high pressure characteristic shift. In these cases the shift was attributed to either inadequate original fill or to a phenomenon, which has not been proven in this case, which speculates that the fluid under the constant high pressure rearranges itself into smaller spheres permitting a volume reduction and causing a void inside the bellows. In the cases where no leakage was observed the problem was corrected by addition of a few drops of fill fluid and the

transducer recalibrated and returned to service with no reoccurrence of the shift being observed over a two-year period. Replacement of "O" rings on bellows also corrected the leakage problem with the transducers giving satisfactory operation after repair.

An additional complicating factor in the detection of the characteristic shift is that the shift is proportional to the indicated d/p making it impossible to detect with a 0 d/p high pressure test. Figure I shows a representative input d/p versus output signal for a normal transducer and a transducer affected by characteristic shift. In the most extreme cases this shift was as high as 15% at full scale d/p and working pressures above 500 psi but was not detectable at low d/p and low working pressures. Thus, it was established that a combination of full scale d/p plus full system working pressure is required for an adequate calibration check of this type of transducer.

CALIBRATION FACILITY

In calibration checks the transducer is first checked for high pressure characteristic shift in the facility discussed below. Upon verification that the shift does not occur or correction of a shift that does occur, the transducer is checked for precise calibration at low working pressure. Low working pressure calibration has been demonstrated to be valid for those transducers not affected by the high pressure shift.

A block diagram of the high pressure shift test facility is shown in Figure II. To avoid the handling of high pressure gases and the associated hazards, this test facility was designed for water only. The piping in the facility was kept as short as possible to minimize volume. The standard transducer is a larger transducer of the same type as the in-service transducer. As can be seen in Figure II, the transducer under test and the standard transducer are connected in parallel to the pressure source. With the equalizing valve open the hand pump is used to pressurize the two transducers to full system working pressure (1600 psi) pumping water only. The very small amount of gas in the water and system elasticity make pressurizing a relatively simple operation, even though pumping water into a completely filled system as shown might seem to create a difficult pressure control problem. With the very limited quantity of gas in the system, the

system pressure drops rapidly upon sustaining a leak with no dangerous jets of water as would occur with the use of high pressure gases to pressurize the facility. Once the facility is pressurized to 1600 psi, the equalizing valve is closed. The cylinder drive is started. This motor moves the cylinder piston displacing water from one side of the cylinder and permitting water to enter the other side. The result of this displacement is a d/p developed across the two transducers. The output of the standard transducer is applied to the X input of the X-Y recorder and the output of the transducer under test is applied to the Y input of the X-Y recorder. The X-Y recorder then traces a curve similar to that shown in Figure I with the affects of high pressure shift showing up as shown by the dashed line in Figure I. The cylinder is driven full scale and back to 0 to test for excessive hysteresis in the transducer. Normally the curves will coincide. On rare occasions, however, a distorted bellows will show excessive hysterisis and so is a valuable test. The trace from the X-Y recorder is filed as a permanent record of the test and succeeding tests are recorded on the same sheet for trend monitoring purposes.

A single range standard transducer accommodates all three ranges of system transducers simply by controlling the ratio of the standard transducer supply voltage to the transducer under test voltage. The standard transducer has a 0-35 psi range. The voltage to this transducer is controlled to provide a full scale X-Y recorder input for 0-20, 0-28, or 0-35 psid to match the transducer under test.

The standard transducer is checked every six months against a high pressure manometer to assure its accuracy.

This facility is capable of detecting shifts of 0.25% of full scale and has been instrumental in maintaining the 1003 transducers within the accuracy limits of $\pm$ 1.5% with a minimum expenditure of maintenance effort. Because no high pressure gas is used the facility is inherently safe.

Because of this the elaborate safety measures needed in handling high pressure gas are not required and the facility throughput is on the order of double that possible in a gas pressurized facility.

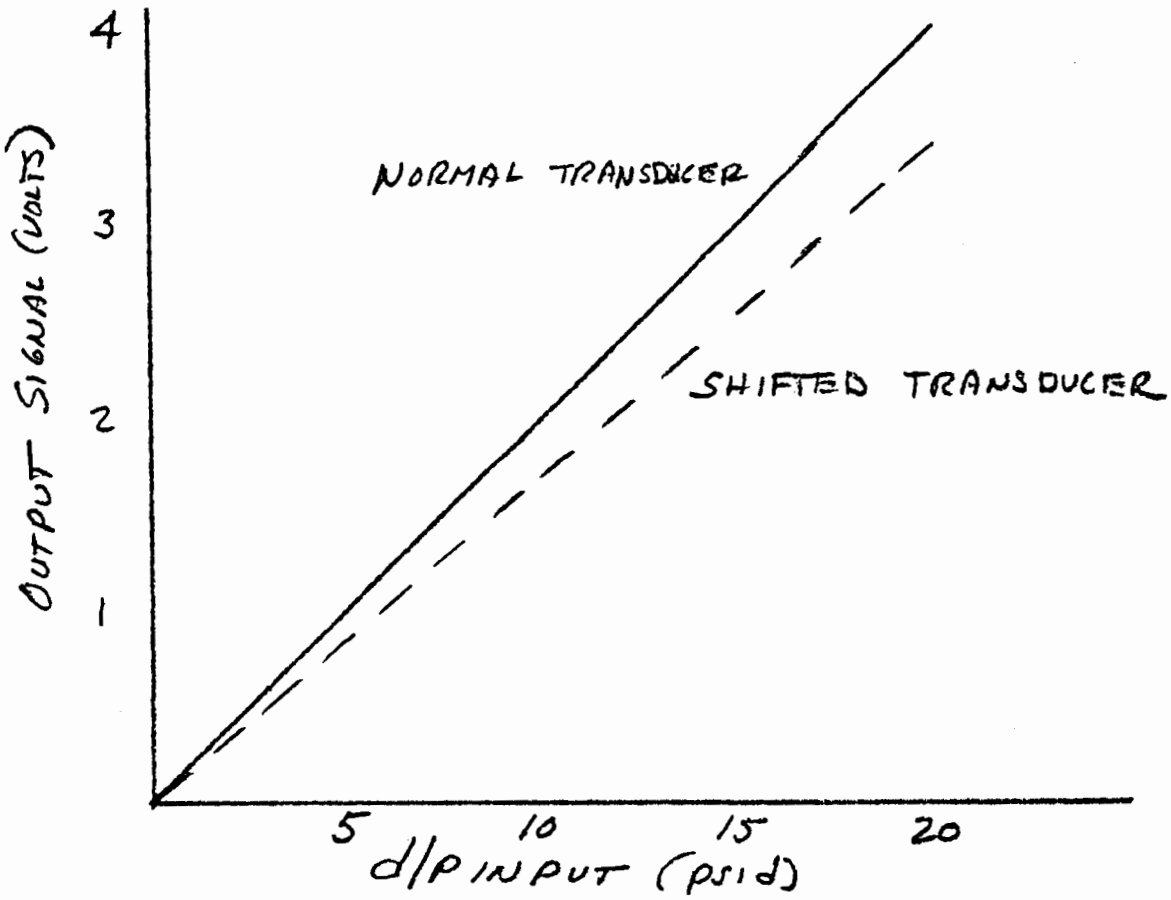

FIGURE I - NORMAL VS SHIFTED TRANSUDCER

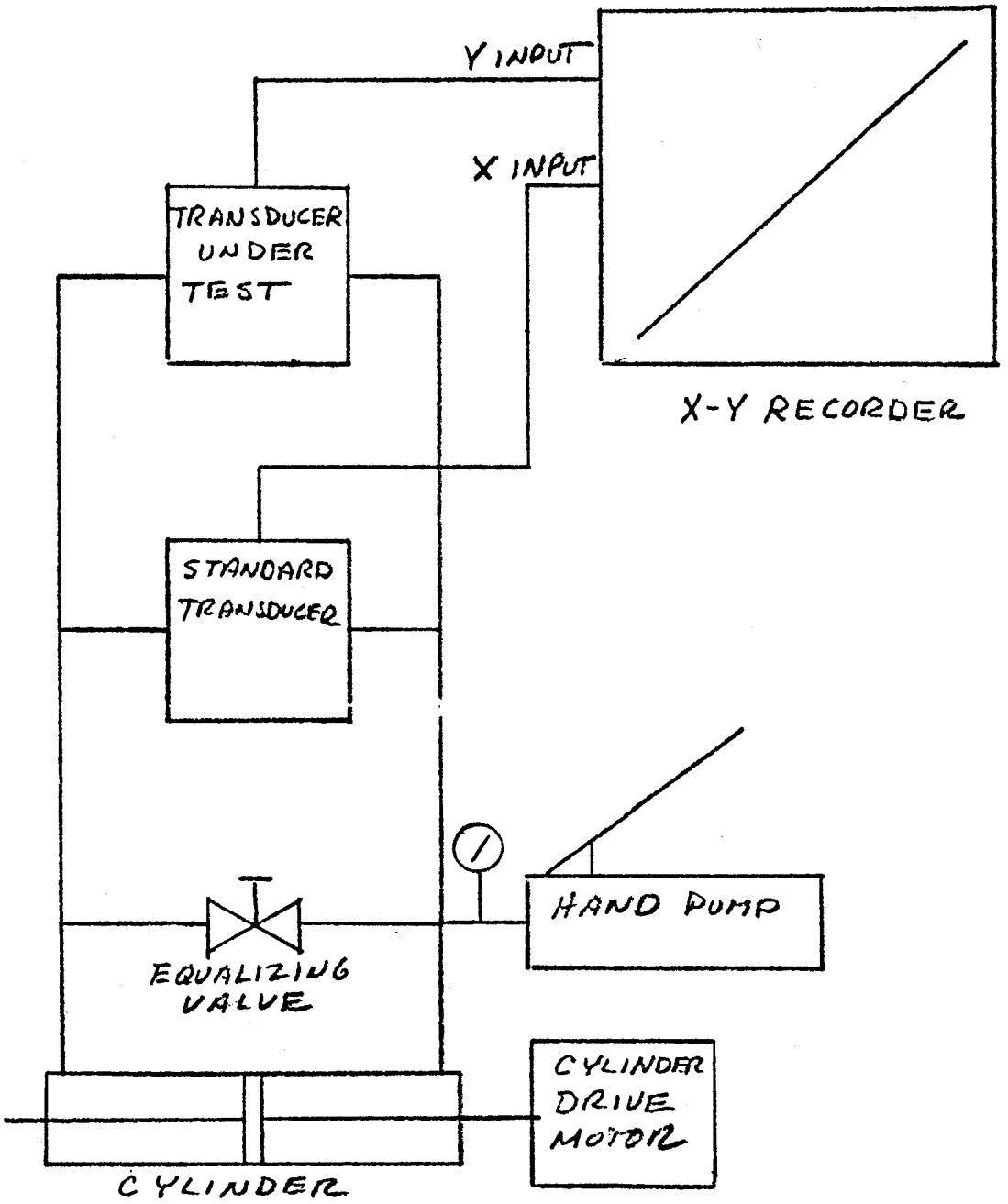

FIGURE II - HIGH PRESSURE SHIFT TEST FACILITY

The Diffractographic Strain Gage

Small strains can be accurately measured using the diffraction of light through an aperture which is fixed to a structure so that its size is a function of strain

by T. R. Pryor and W. P. T. North

ABSTRACT—A method for measuring strain using diffraction of light from a single aperture is described, and results of a comparison tensile test with an electrical-resistance strain gage are presented. The "diffractographic strain gage" is shown to have high sensitivity, linearity, accuracy and temperature compensation and the ability to operate in a variety of hostile environments. It is furthermore simple, inexpensive, and the data can be collected by eye without assistance from further instrumentation.

Introduction

The first use of optical interference or diffraction phenomena to measure strain was by R. V. Vose[1] in 1935, who utilized two Fabry-Perot interferometer plates clamped to a specimen. While this method has been succesfully used for highly precise measurements, its excessive sensitivity to unwanted disturbances of every sort has ruled it out for most applications. It is interesting to note however, that the technique could be "modernized" and considerably improved using a laser interferometer with a retro-reflective element (similar to those used for control of machine tools).

In 1953, J. F. Bell[2,3] devised the "diffraction-grating strain gage" which has since been used primarily for studying plastic wave propagation in solids. The Bell device utilizes a diffraction grating consisting of equally spaced parallel lines ruled on the surface of a specimen. Very narrow line widths are typically employed causing the light from each line to be diffracted quasi-uniformly throughout space. The far-field pattern of the grating then exhibits spatial modulations due predominately to interference between the light from each line, with the form of the modulation depending on the number of lines irradiated. Regardless of this number, however, certain maxima (grating orders) will be formed at positions dependent solely on the wavelength of the light used, the angle of light incidence to the grating and the inter-line grating spacing. To obtain strain, one monitors a change in position of an order (wavelength and incidence angle held constant) which is directly relateable to a change in line spacing and, thus, strain.

As a strain gage, the Bell method has many advantages—particularly for high strains and strain rates. For example, gage lengths of 0.125 mm or less can be used, no contact need be made or glue used to attach anything to the specimen, and the system can accurately respond to any strain rate encountered. Despite these advantages, the method has been little used by others—primarily because of the difficulties inherent in ruling gratings, and a lack of sensitivity even if one succeeds in applying the grating. While several variants of the Bell method have recently appeared in the literature (some of which allow partial relaxation of grating-application requirement), the basic sensitivity problem remains.[4-6] For example, the minimum error reported in Refs. 4 and 5 is 500 microstrain.

Here at the University of Windsor, we have attempted to develop methods which would preserve, if possible, the advantages of the Bell technique without the disadvantage noted. While there are a large number of possible approaches which can be tried (particularly if a laser source is considered), the most promising we have found is also the simplest. We call it the "diffractographic method" since it works in all cases by utilizing the diffraction properties of a single aperture.

Theory of Measurement

A diffraction pattern produced by a single-slit aperture of width w irradiated by monochromatic plane waves of wavelength λ, is shown in Fig. 1. The pattern is of the characteristic "Fraunhofer" type which occurs whenever $R >> w$ or in the focal plane of a lens (where R is effectively infinite). As derived in many optical tests (see, for example, Ref. 7), the intensity distribution in the diffraction pattern is represented by the equation

$$I = I_o \frac{\mathrm{Sin}^2 \beta}{\beta^2} \tag{1}$$

where I_o is the intensity on the center line $\theta = 0$ and

$$\beta = \frac{\pi w \,\mathrm{Sin}\, \theta}{\lambda} \tag{2}$$

As can be seen from the intensity equation which is also shown schematically in Fig. 1, one is constrained to working with small values of θ unless unrealistically high-powered light sources or super-sensitive detectors are employed. In this small-angle region, we can approximate eq (2) by

$$\beta = \frac{\pi w y}{\lambda R} \tag{3}$$

From eq (1), we see that when $\beta = n\pi$, ($n = 1, 2, 3, \ldots$) intensity zero's or minima occur in the diffraction pattern.

The technique is based on relating changes in such diffraction patterns to changes in the aperture width w caused by strain. To install such a gage, it is necessary only to have an aperture on or connected to, the specimen under test. The detection of resulting diffraction-pattern changes can be done in several ways, though only one method will be discussed here—that of following the position of a particular minima by eye and measuring the change in y and, thus, w using eq (3). This technique is extremely simple, requires no readout instrumentation and is linear for any value of strain (within the limits of the small angle approximation).

Aperture Configurations

Specimen apertures may be of many types and geometric forms. For example, such an aperture can be formed by an opaque strip on the surface of a polished specimen or, alternately, a reflective strip on the surface of a diffusely scattering background. Many variations exist and all such versions have the same advantages of the Bell method plus easier application and shorter gage length. However, they also have equally low sensitivity to strain. We are investigating several methods of improving this, but a basic limitation remains—i.e., that a 0.01-percent strain changes the aperture width by 0.01 percent and, thus, by said amount the angle at which a particular monitored point in the diffraction pattern occurs. While such a change can be detected, "noise" due to optical alignment or intensity shifts becomes very significant at this level and must be adequately compensated—a rather involved process which limits the practical usefulness of the technique at lower strain levels.

A Diffraction-effect Multiplier

In order to improve the sensitivity of the method, the version shown in Fig. 1 has been devised—where we have essentially "traded" gage length for sensitivity. The effective linear gage factor of such an arrangement can be quite high, since a given strain changes the slit width w by the same value as it changes the gage length l—i.e., $\epsilon l = \Delta l = \Delta w$. Defining gage factor in the traditional manner used for electrical strain gages, we see that

$$\text{Gage factor} = \frac{\Delta w / w}{\epsilon} = \frac{l}{w} \tag{4}$$

This strain-multiplier effect is virtually the same as employed in capacitance gages, and for $l = 40$ mm, $w = .04$ mm, we obtain for the diffractographic gage an intrinsic linear gage factor of 1000—before any further multiplication by mechanical or optical means. From this exercise, we also may visualize the sensitivity problem inherent in the diffractographic gage without the multiplier as well as the Bell gage and its derivatives—i.e., they have a linear gage factor of one.

Besides the large increase in sensitivity, another advantage is apparent from Fig. 1. If we make the "blades" of the same material as the specimen, the gage will measure the same strain regardless of expansion due to temperature changes. If the "blades" are suitably affixed, we can therefore accurately measure strain under very unusual tem-

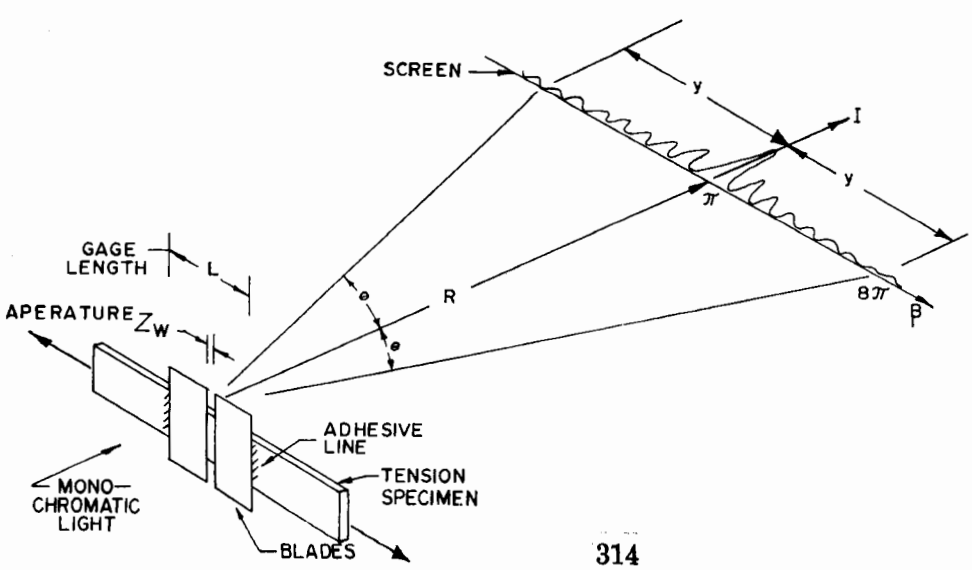

Fig. 1—Schematic diagram of the experimental arrangement

perature conditions.

An experimental program was undertaken by the authors (both at the University of Windsor and at the National Bureau of Standards in Washington, D.C.) to evaluate the method. Many different types and arrangements of edges and materials have been tried, as well as various detection techniques. To illustrate the simplicity of the method, we have chosen to present here the results of a standard tensile test in which the naked eye and a ruler formed the readout system.

Experimental Arrangement

Two diffracting edges were mounted using conventional strain-gage adhesives to an aluminum specimen having a 76-mm-long test section and 12.7 mm × 3.17 mm cross section. While many types of edges are suitable for this purpose, razor blades were used for their convenience and could have been attached to the specimen by knife edges, welding, or any other suitable means. In this case, the edges were fixed such that a roughly parallel aperture of some 0.145 mm was formed on either side of the model as the blades extended beyond the edge of the specimen on both sides and, by interrogating both aperture sections formed, it was possible to determine if the stress was in fact uniaxial. Due to the dimensions of the razor blades, the gage length was 38.5 mm and the frosted glass screen on which the diffraction pattern changes were observed was some 2.78 meters from the tensile specimen. A 5-milliwatt He-Ne laser was used as the light source and an electrical-resistance strain gage was mounted on the specimen for comparison purposes. From eq (4), we see that the effective linear gage factor of this arrangement was therefore 266.

Experimental Procedure and Results

At zero strain (as indicated by the electrical strain gage), an initial measurement of the distance between the two 8th-order minima was taken using a clear-plastic ruler graduated in millimeters and taped to the frosted-glass screen. This distance when divided by 2 gives y and, thereby, the initial aperture width w_o, using eq (2) and a value of $\beta = 8\pi$. After loading the specimen to a given strain level determined by the electrical gage (say, 500 microstrain) the separation between the 8th-order minima was again measured and the aperture width at that strain level calculated. The difference in aperture widths Δw then could be related to strain by eq (4). Figure 2 depicts the average results of four tests performed in this manner, while diffractograms representing four different strain levels (photographed off the frosted-glass screen) are shown in Fig. 3.

Discussion

Application of the razor blades to the specimen can be done by eye with no special jigs or the like, to obtain apertures of 0.1 mm or less. Aperture width can be determined after application and it is only necessary to position the blades approximately parallel, since one can always read the pattern in the plane containing light diffracted from a chosen pair of points on the blades.

The detection system described is not only cheap, accurate and easy, but it automatically accounts for any reasonable shift in alignment between the laser beam and the aperture plane. While the diffraction order used (the 8th) and the aperture to screen distance, R, were chosen for convenience, the maximum sensitivity will be realized at the largest value of sin θ at which a given minima can be reliably observed. When the naked eye is used, this value will be a function of scale design, source intensity, aperture width and background-lighting condition. Though no attempt was made to optimize the detection method in our experiment, it was nevertheless possible to observe changes of 20 microstrain by eye while agreeing, at all times, within 5 percent of the electrical-resistance gage. Indeed, when a light source with a precisely known wavelength is used (such as a laser), the diffractographic strain gage is capable of considerably better resolution than its electrical-resistance counterpart. This can be seen from eq (2) whose only remaining variable Sin θ may be precisely determined as well. If properly applied, the diffractographic gage is unaffected by humidity, temperature, radiation, transverse strain, time effects and

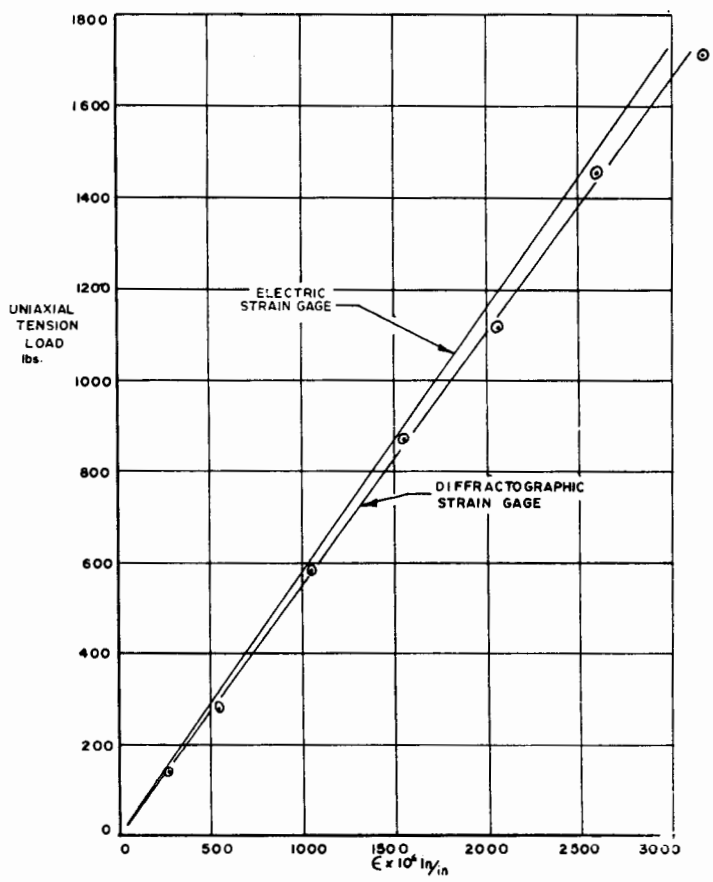

Fig. 2—Comparison of load vs. strain for the electric and diffractographic strain gages

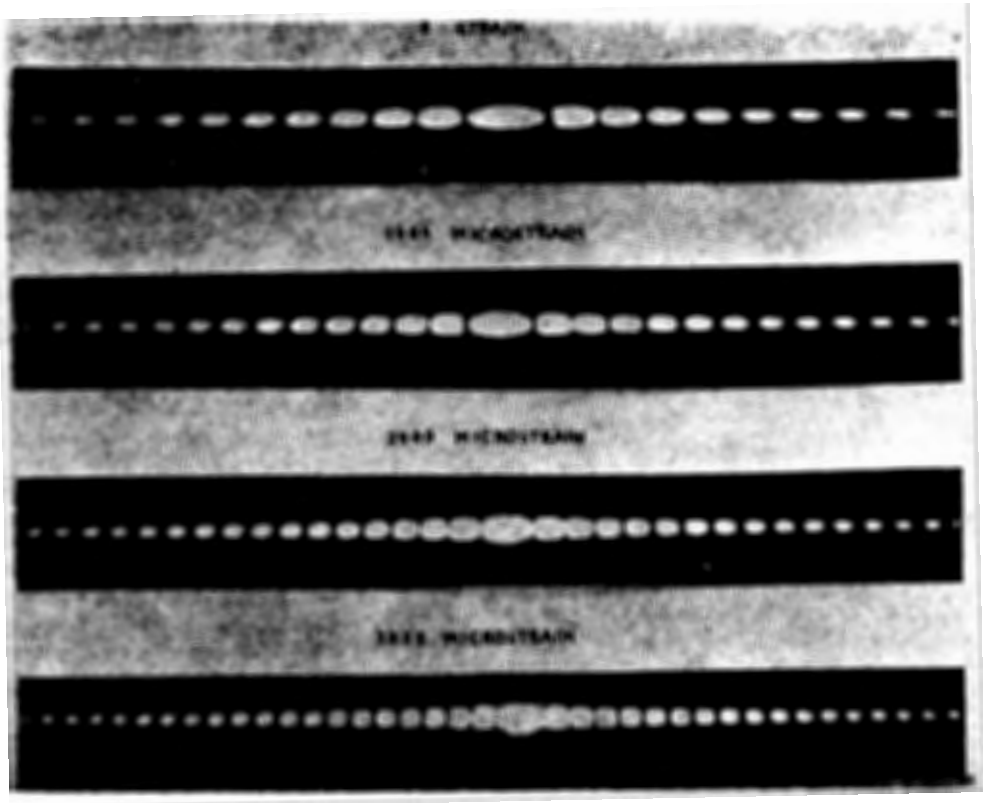

Fig. 3—Diffractograms at various strain levels. (Note that an opaque mask covers the central maximum for better contrast.)

most other variables affecting the output of electrical gages.

A visible laser source has been employed in this experiment and is virtually essential for accurate observation of fringe movements by eye. With photoelectric or photographic detection, however, many other sources will suffice.

Conclusion

The diffractographic strain gage has been shown to be:

1. Sensitive to small strains.
2. Essentially linear over all strain ranges when small angles are used.
3. Insensitive to lateral strains.
4. Inexpensive as well as easy to apply, use and interpret.
5. Mountable by means which do not reinforce the specimen.
6. Noncontacting in the sense that there need be no physical connection between specimen and readout.
7. Readable by the naked eye, if desired.

Furthermore, it is obvious without experiment that it can be:

(a) Easily made to be temperature compensating.
(b) Usable in hostile environments.
(c) Stable with time, temperature and humidity.
(d) Readable by photoelectric means permitting dynamic-strain measurements.

Disadvantages of the method depend on the application but, in general, are:

1. Possible alignment problems if a reflective aperture is used in conjunction with a photoelectric detector system.
2. Sensitivity decreases linearly with gage length.
3. Measurement in constrained areas may be impossible, if no suitable means can be found to get the light "in and out", or if no miniature sources and detectors will suffice.

Acknowledgments

The authors wish to acknowledge the support of the National Research Council of Canada, Grant No. A3360, and express their gratitude for the valuable assistance and encouragement offered by K. D. Mielenz and other members of the Quantum Metrology Branch of the National Bureau of Standards in Washington, D.C.

References

1. *Dove, R. C. and Adams, P. M., "Experimental Stress Analysis and Motion Measurement," 11, Charles E. Merrill (1964).*
2. *Bell, J. F., U.S. Patent Number 2,929,242.*
3. *Bell, J. F., "Diffraction Grating Strain Gage," Proceeding of the S.E.S.A., XVII (2), 51-64 (1959).*
4. *Douglas, R. A. et al, "Strain-field Investigations with Plane Diffraction Gratings,"* EXPERIMENTAL MECHANICS, *5 (7), 233-238 (1965).*
5. *Sharpe, W. N., "The Interferometer Strain Gage,"* EXPERIMENTAL MECHANICS, *8 (4), 164-170 (1968).*
6. *Pryor, T. R., U.S. Patent Number 3,458,257.*
7. *Towne, Dudley M., "Wave Phenomena," Chapter 12, Addison-Wesley (1967).*

SESSION V

PERFORMANCE SPECIFICATIONS, STANDARDS, AND INFORMATION SOURCES

Mr. Jack Shrager, Chairman, Federal Aviation Agency

STATIC/DYNAMIC ACCURACY CONCEPTS

AN UNCONVENTIONAL VIEWPOINT AS SPRINGBOARD FOR DISCUSSION

Prepared as a brief presentation
for Session V:

Performance Specifications, Standards and Information Sources

SEVENTH TRANSDUCER WORKSHOP
Telemetry Group
Range Commanders Council
Inter Range Instrumentation Group

April 4 - 6, 1972
Albuquerque, New Mexico

Peter K. Stein
Professor of Engineering
Laboratory for Measurement Systems Engineering
Mechanical Engineering Faculty
ARIZONA STATE UNIVERSITY

Publication No. 41
Laboratory for Measurement Systems Engineering
ARIZONA STATE UNIVERSITY
Tempe, Arizona

April 1972

STATIC/DYNAMIC ACCURACY CONCEPTS:

AN UNCONVENTIONAL VIEWPOINT AS SPRINGBOARD FOR DISCUSSION

Peter K. Stein
Professor of Engineering
Laboratory for Measurement Systems Engineering
Mechanical Engineering Faculty
ARIZONA STATE UNIVERSITY
Tempe, Arizona

Prepared for presentation to the Seventh Transducer Workshop of the Telemetry Group, Range Commanders Council, Inter-Range Instrumentation Group, at Albuquerque, New Mexico, April 4-6 1972

Before statistical concepts bearing on accuracy, tolerance analysis or error analysis can be applied to the OUTPUTS from measuring systems, the right to do so must be established beyond reasonable doubt. It is the experimenter's responsibility to prove that: (Fig. 1)

1. The data truly represent the process being investigated, and that the measuring-system/process interface has not affected the data (Ref. 1). Example: Resistance sensor/CRO interface.

2. Undiscovered controlling variables do not affect the data, masquerading as statistically distributed results (Ref. 2). Example: Impurities in Platinum effect on RTC and TC behavior.

3. That test results do not represent the individualistic responses of particular transducers which are arranged in deviation-amplifying structural relationships with each other (Refs 3, 4). Example: Differential pressure transducer with bellows

4. That the measuring system output represents not only the data, but ALL of the data, and that significant information has not been lost in the measuring process (Refs. 4, 5). Examples: Frequency/Transient response, linearity, hysteresis, etc.

5. That the measuring system output represents not only the data and all of the data, but also NOTHING BUT the data: that combinations of undesired-environment-created responses, and undesired responses created by desired environmental factors have been kept under control (Ref. 6). Example: Magnetic and thermal effects in strain measurement.

6. That the quantity being observed and measured is really the appropriate quantity to describe the process being investigated. (Ref. 4). Example: F may equal (ma) but that does not mean that acceleration measurement characterizes "vibration" phenomena.

If, and only if, questions such as the six listed above, have been satisfactorily answered, has the experimenter earned the right to apply statistical principles to the analysis of measuring system outputs. In a surprising number of cases, when these six questions have been correctly treated, statistical concepts are no longer necessary to the analysis and interpretation of experimental data. Some simple methods for treating the problems described above are also cited in Ref. 7.

References

1. Traceability: The Golden Calf, P. K. Stein, Measurements & Data Vol. 2, No. 4, July-Aug. 1968, pp. 97-105. Also in Proc. Western Regional Conf. for 1968, ASQC, Milwaukee, Wis. pp. 109-121.

2. Thirty Years of Strain Gages, P. K. Stein, Instruments & Control Systems, Vol. 41, No. 2, Feb. 1968, pp. 75-78.

3. The Role of the Individual in Transducer Society, P. K. Stein, Proc. 1st Meas. Science Conf., Cal. State Polytechnic College, San Luis Obispo, Cal. 1971. Western Periodicals, Los Angeles, Cal.

4. Measurement Engineering, Vol. I: Basic Principles, P. K. Stein Stein Engineering Services, Inc., Phoenix, Az. 6th ed., 1971.

5. A New Conceptual and Mathematical Transducer Model: Application to Impedance-Based Transducers such as Strain Gages. Proc. 2nd Discussion Meeting, IMEKO Sub-Comm. on Measurement of Force & Weight, VDI Verlag, Düsseldorf, Germany (scheduled for 1972 publ.)

6. The Response of Transducers to their Environment: The Problem of Signal and Noise, P. K. Stein, Proc. 6th Transducer Workshop, Doc. 112-70, White Sands Missile Range, N.M., 1970, pp. 91-106. Shock & Vibration Bull. Vol. 40, No. 7, pp. 1-15, U.S. Naval Research Lab., Washington, D.C. 1970. Jnl. Environmental Sciences May-June 1971, pp. 10-17.

7. Organizational Meeting of Laboratory Groups, Lab. for Meas. Syst. Eng., ASU, Publ. 32, Lf/MSE, ASU, September 1971, Tempe, Arizona.

The above references are all taken from the Lf/MSE series of publications and are available from the Laboratory for Measurement Systems Engineering, Arizona State University, Tempe, Arizona 85281.

FIGURE 1: PROBLEM AREAS IN MEASURING SYSTEMS WHICH PRECEDE THE OUTPUT

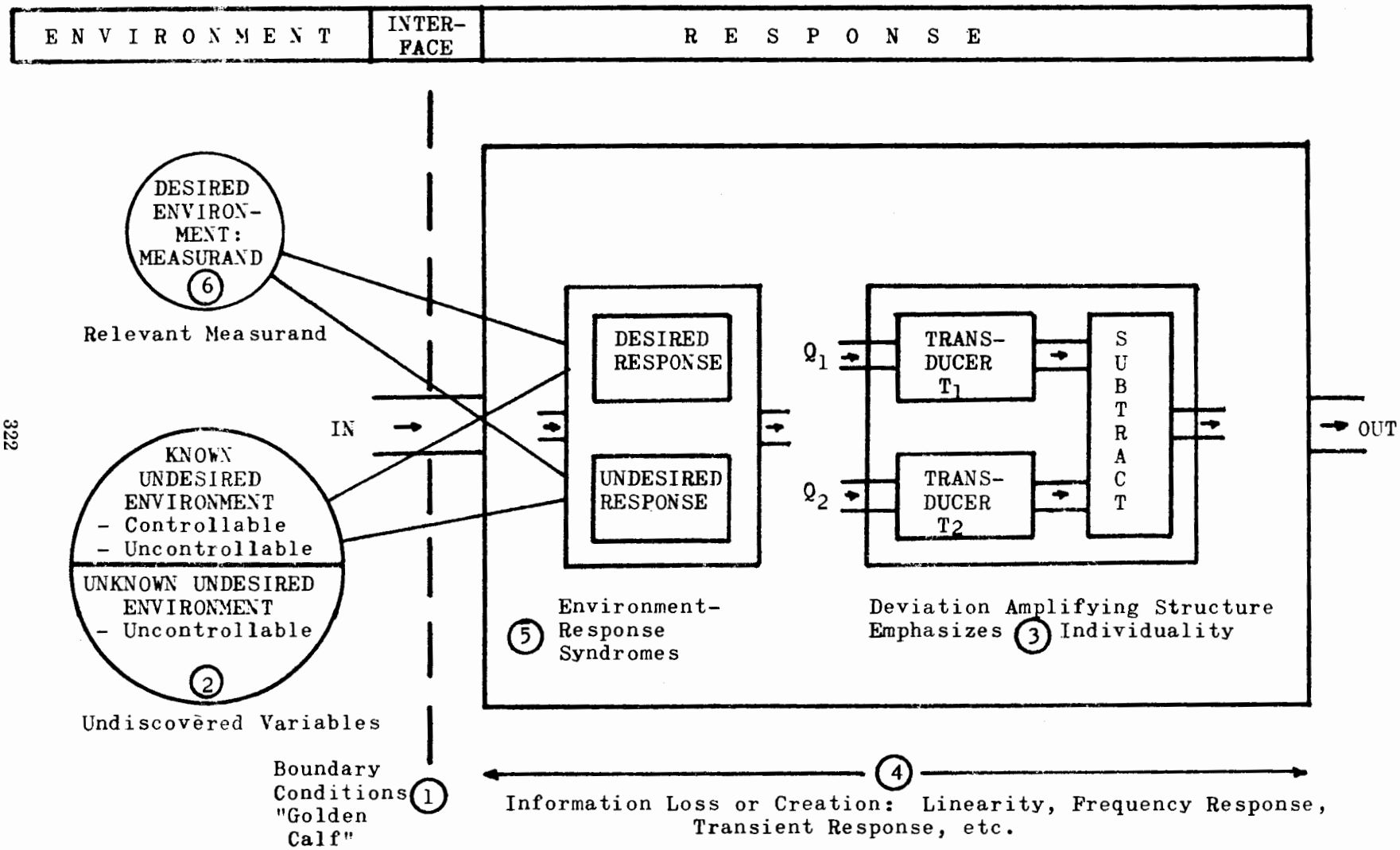

EXAMPLES AND APPLICATIONS

Typical simple examples of the first three items cited above are included in this paper:

1. A Typical Interaction Problem: An electrical-output transducer such as a strain gage load cell, and an electrical amplifier, such as in a cathode ray oscilloscope.

2. Undiscovered Controlling Variables: Study of the effect of impurities in Platinum thermocouples and resistance thermometers.

3. The Individuality of Transducers: Measurement of differential quantities, and associated problems.

These areas are among the less recognized in measurement system design. The references cited earlier cover this material in more detail and cite additional references.

Examples are not cited for the remaining three problem areas partly because of space and time limitations, and also for the reasons cited below:

4. Information Loss: Problems relating to linearity, frequency response and transient response are treated extensively in the literature. It is this author's viewpoint that these should NOT be treated as errors, but as correction factors, or as design targets. Thus any of these effects can be minimized beyond any arbitrary limit by system design.

5. Environment-Response "Syndromes": The fact that all components in a measuring system respond in all ways in which they can to all environmental factors, past and present, was treated in detail in this author's contribution to the 6th Transducer Workshop. The measurement engineer's job is to select the single desired environment-response combination and enhance it, while suppressing all other combinations.

6. The selection of measurands to truly represent the process being investigated is not directly the function of the measurement engineer, but of the test requestor. The measurement engineer must be concerned -- but this topic is not discussed in this paper.

EXAMPLE 1: A TYPICAL INTERACTION PROBLEM (Fig. 2)

The cathode ray oscilloscope has been calibrated from a pure voltage source with no internal impedance. It was thus exposed to a specific boundary condition during calibration: short circuit. The transducer, for which a Thevenin equivalent circuit is shown, was calibrated by using a pure voltage detector as read-out. It was thus exposed to a specific boundary condition during calibration: open circuit.

In use, however, these two devices are inter-connected and "see" each other under boundary conditions under which neither was evaluated; each is now part of the other's environment -- a word now used in its most general sense.

In the simple example shown in Fig. 2, the loading factor may be calculated:

$$\text{Loading Factor } L = \frac{e_o}{e_i} = \frac{Z_1}{Z_1+Z_2} = |L| \angle L$$

$$|L| = \frac{R_1}{R_1+R_2} \cdot \sqrt{\frac{1 + w^2.\tau_2^{\,2}}{1 + w^2.\tau_1^{\,2}}}$$

$$\angle L = \text{arc.tan.} \left[\frac{w(\tau_2-\tau_1)}{1+w^2.\tau_1.\tau_2}\right]$$

where

$$\tau_1 = \left[\frac{R_1.R_2}{R_1 + R_2}\right](C_1 + C_2)$$

$$\tau_2 = R_2.C_2$$

w = frequency in radians per second; τ = time constant in seconds, L identifies the magnitude of the loading factor, $\angle L$ its phase angle, using the forcing function, e_i as phase reference.

A numerical example might be as follows:

R_1 = 1 megohm
C_1 = 47 picoF
R_2 = 1000 ohm
C_2 = 300 pico F

$$\frac{R_1}{R_1+R_2} = 0.999 \qquad f_1 = 460 \text{ kHz}$$

$$\frac{C_2}{C_1+C_2} = 0.89 \qquad f_2 = 530 \text{ kHz}$$

Regardless of the frequency-response of the CRO, 10% of the signal is "lost" if it occurs at frequencies above about 460 kHz. The use of impedance-multiplying probes usually implies gain-division. Since outputs from most devices such as thermocouples, strain gages, etc. are already in the millivolt range, loss in gain can not be traded for increased impedance level, which would minimize the interaction effect.

FIGURE 2: A TYPICAL INTERACTION PROBLEM -- ELECTRICAL EXAMPLE

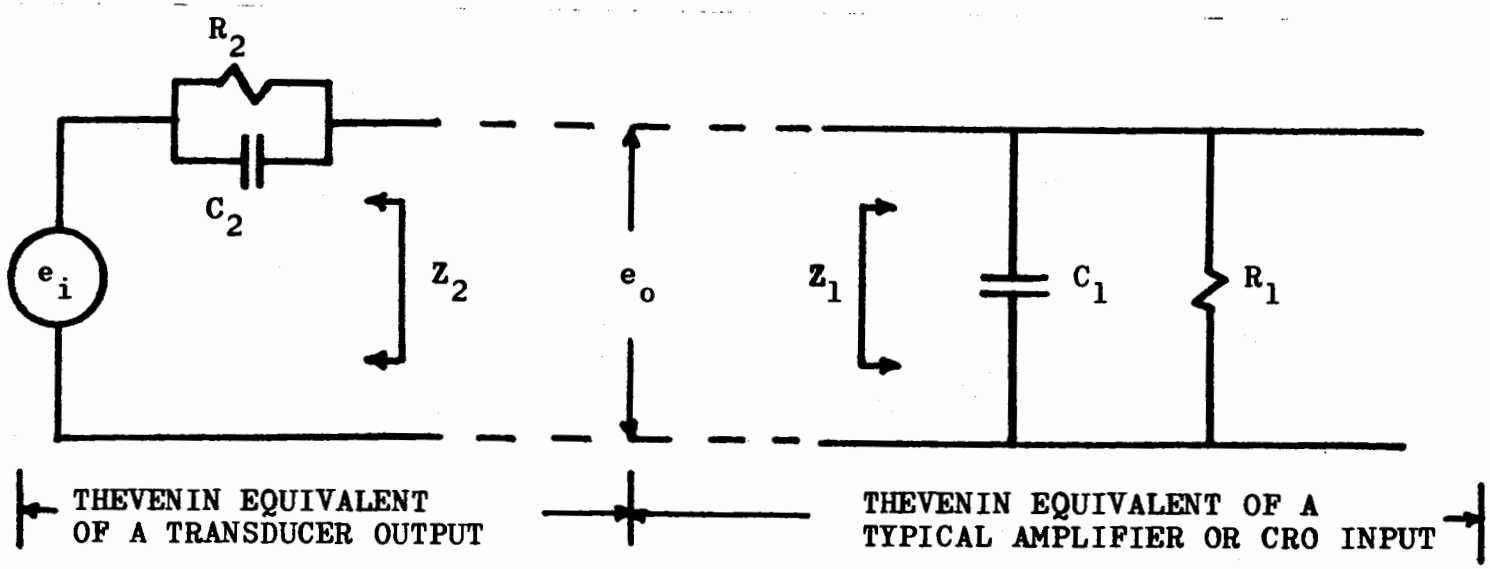

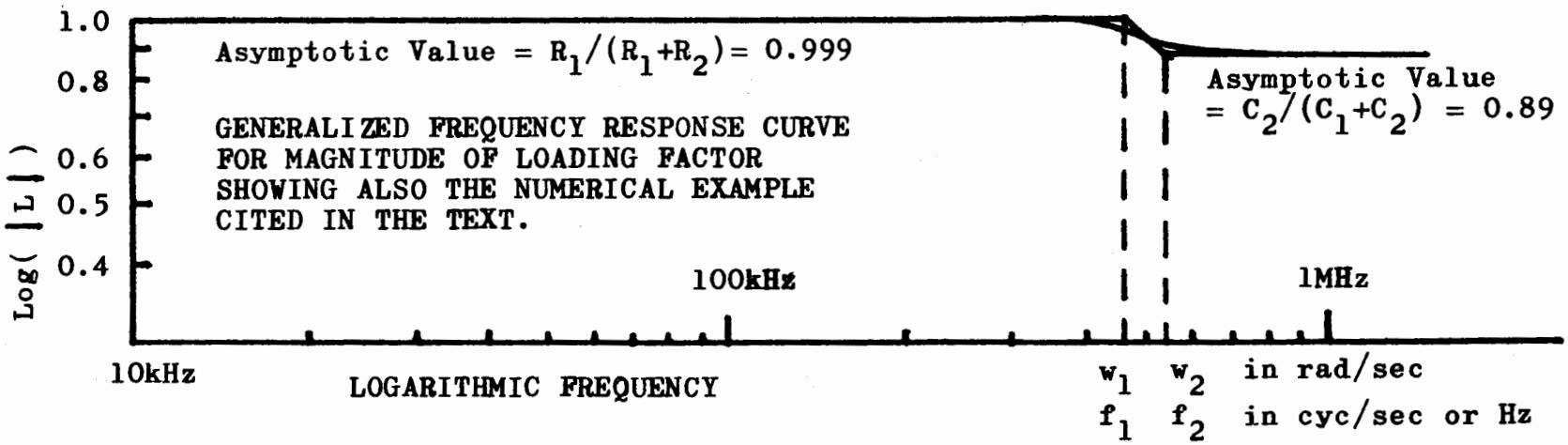

EXAMPLE 2: UNDISCOVERED CONTROLLING VARIABLES (Excerpt from Ref. 7)

When unknown factors affect test data, two courses of action are possible:

i) The use of statistical techniques to (hopefully) average out any (hopefully) random effects.

ii) A detailed investigation, taking the deterministic (where-there-is-an-effect-there-is-a-cause) approach to determine the unknown or uncontrolled variables which affect the data.

Depending on the problem, either approach may be desirable. In production work, statistically based quality control may be more economical, in spite of a certain expected rejection rate, than a research program to deliberately increase the yield of the process.

In scientific work, where progress from magic and superstition to science rests almost entirely on the discovery, understanding, and control of previously unknown cause-effect relationships or physical laws, the second approach may be more helpful.

Man has always tried to control his environment, We want specific actions on our part to produce specific results. When we correctly pair causes and effects -- when we have discovered the controlling variables in a given situation -- we speak of SCIENCE.

When we incorrectly pair causes and effects -- when we get our instrumentation working by giving it a sharp rap on the side panel -- then we have started a SUPERSTITION, which is nothing more than an uncontrolled variable which happens to assume an appropriate value once in a while; just often enough for us to think that we really know what we're doing. We are then magicians, shamans, not scientists.

As time passed, individual practitioners in any given field, would discover certain scientific relationships and keep them secret -- these individuals would become the magicians or shamans of their tribe, or in later times, the priests and emperors who knew when the live-giving floods of the Nile or the Yellow River would occur; but calendars which allowed such predictions were jealously guarded state secrets in those days. As Needham writes (*):

> "Furthermore, owing to the close association between the calendar and State power, any imperial bureaucracy was likely to view with alarm the activities of independent investigators of the stars, or writers about them, since they might secretly be engaged upon calendrical calculations which could be of use to rebels interested in setting up a new dynasty."

(*) Joseph Needham, F.R.S., SCIENCE AND CIVILISATION IN CHINA, Vol. 3, Mathematics and the Sciences of the Heavens and the Earth, p. 193. Cambridge University Press, England, 1959.

Needham continues:

> " Hence it is not at all surprising to find exhortations to security-mindedness addressed century after century to astronomical officials. For example:
>
> "In the twelfth month of the 5th year of the Khai-Chheng reign period (+840) an imperial edict was issued ordering that the observers in the imperial observatory should keep their business secret. 'If we hear', it said, 'of any intercourse between the astronomical officials or their subordinates and officials of other government departments or miscellaneous common people, it will be regarded as a violation of security regulations which should be strictly adhered to. From now onwards, therefore, the astronomical officials are on no account to mix with civil servants and common people in general. Let the Censorate look to it.'
>
> "As a sociological phenomenon, therefore, there was nothing new about Los Alamos or Harwell. But whether or not the best and greatest scientific achievements happen under such conditions is another question. . . "

Today we call knowledgable but secretive individuals CONSULTANTS or MANUFACTURERS. Such "shamans" can produce "magic" if their formulas are followed exactly. Such practices can, however, hardly lead to an understanding of measuring systems by the majority of users. A brief description of how the present-day knowledge of resistance strain gages developed from 1938 to 1968 will be found in Lf/MSE Pub. 11 and presented as the development from magic to science through the discovery of uncontrolled variables.

Another good example of a by-pass of statistics in favor of a rather elaborate research program aimed at gaining understanding, is a recent paper by John Cochrane, part of whose work appeared in the Sept. 1970 Engelhard Technical Bulletin, Vol. XI, No. 2, (58-75), and part of whose work is reported in the 5th International Symposium on Temperature, June 1971, Washington, D.C., proceedings in publication.

Part of his work concerned the effect of minute impurities on the thermoelectric and thermoresistive properties of platinum, with a view towards gaining an understanding of the mechanisms involved. The total predicted effect on a number of impurities found in any specific specimen was identified by a factor: K(EMF) for thermoelectric properties. Fig. 3 from Cochrane's paper identifies the theoretically predicted relationship based on studies with individual impurities, and the actual relationship for different impurity combinations and for other impurities.

A usual statistical analysis of the data in Fig. 3, would have disregarded points E and I, in all probability, and then run some least-square correlation or regression analysis for "best-fit" data; a process which would not have added an iota to our understanding of why platinum thermocouples do what they do, nor to our ability to control the behavior of a specific batch of platinum wire.

Cochrane, however, notes: "Attention was then concentrated on points displaced from the curve. Some definite trends of displacement were noted for points highly influenced by particular impurities, indicating that some adjustment in their (individual effects) was probably required. Adjustments to some values were subsequently made as the results of special experiments of high qualifications. Studies of other displacement plots (off-line points) revealed a variety of data transcription errors, test condition deviations, drifted reference standards and uncertainties of data qualification, considerations of which were helpful in designing further improvements in the conditions of tests . . . Studies of inter-relationships of data have proved to be useful towards attaining and maintaining high standards of platinum thermocouple quality control." A list of some of Cochrane's points is given below:

A. If E.M.F. is determined on an unetched wire, a plot calculated from spectrographic results based on an etched condition may fall below the curve, since the surface of the wire may contain a higher concentration of impurities, especially iron, than the core.

B. If E.M.F. and spectro test conditions are equally representative of a common specimen cross-section, a plot may fall below the curve owing to physical stress in the E.M.F. wire due to inadequate annealing and/or too rapid cooling of the wire after annealing, i.e. due to inadequate relief of stresses originally present in the worked metal or to fresh stresses imposed upon it.

C. A plot may be displaced below or above the curve owing to a drift in the E.M.F. Reference Standard employed. This is the more evident when plots in a consecutive series of measurements tend to fall systematically more or less parallel to the curve.

D. Plots in a series tending to be displaced from the curve systematically in more or less constant ratio to the reported levels of a particular impurity having significant relative effect, e.g. iron, may indicate an inadequacy of the Spectro Reference Standards in respect of such element.

E. Errors of calculation or transcription involving a shift of decimal point can result in substantial displacements in the case of elements having relatively great effect on E.M.F. In the region of E.M.F. negative to Pt 27 a reported content of 10 p.p.m. iron would be immediately suspect and a displacement of 9 K(EMF) units would indicate a decimal point shift.

F. A plot displacement below the curve may be due to the presence of unreported effective impurities. Such displacements are usually due to elements having both a high k(emf) value and a relatively high limit of spectro detection, such as lead or tungsten.

G. A plot calculated on the assumption that some reported impurity, such as silicon, is ineffective, will fall below the curve if it is actually present, wholly or partially, in electrically-effective condition.

H. A plot calculated on the assumption that some impurity, such as zinc, is effective, will be displaced above the curve if such impurity is actually present, wholly or partially, other than in effective condition. A plot so calculated, for example, for a zinc-platinum alloy prepared under cover of argon, would be so displaced if the test wire had been annealed in air rendering part of the zinc ineffective by oxidation.

I. Plot displacement above the curve can be due to a spurious figure appearing in a spectro report. This might be due to contamination of the spectro sample, to a misinterpretation of lines, or to a printing error such as lead appearing in place of palladium, etc.

J. Plot displacements above and below the curve may be due to a spectro sample being unrepresentative of the portion of metal yielding the reported E.M.F. value, by reason of lateral inhomogeneity in the wire. Such cases are usually associated with very small melts and/or with the presence of several effective impurities at relatively high concentrations. Serious inhomogeneity may relate to only some components such as lead or iron.

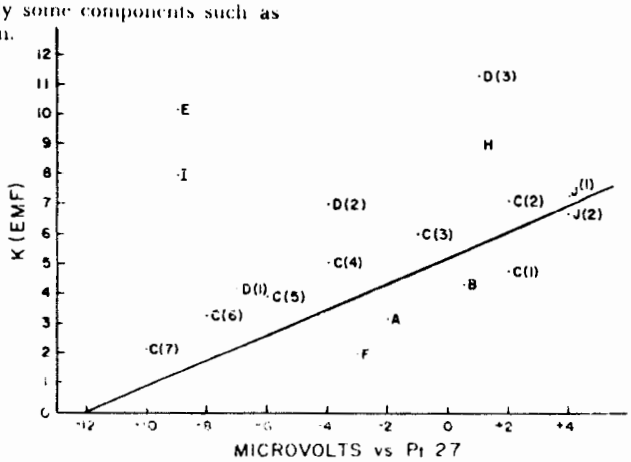

Figure 3. Examples of causes of apparent discord in the K(E.M.F.)/E.M.F. relationship (referred to Figure 1 curve).

That there are still unknown cause-effect relationships awaiting discover can be illustrated in dozens of ways; two examples are selected at random:

> "Checking the course of roads on terra firma was beset with considerable hazards (trying to locate ancient trade routes in the Near East deserts). Sinking trenches was laborious and wasteful. But where the sand-covered surface refused to disclose any trace to the earth-bound examiner, one measure proved phenomenally rewarding; all one had to do was to drive a train of camels over the vicinity, and the desert beasts would file along the hidden road-bed. Such uncanny cameloid proclivities (were) found corroborated in a passage from a Roman writer Vegetius, who observed that these animals seemed to have a natural instinct for following in the steps of their long-departed kin." (Leo Deuel, Flights into Yesterday: The Story of Aerial Archaeology, St. Martin's Press, N.Y., 1969, p. 97)

> "In addition to calendars, plants have built in clocks, whose mechanism is not yet understood. Some can tell time within an hour or so, and some almost to the minute, regardless of the season. There is a simple marine algae that luminesces (gives off light) at just about midnight every 24 hours. It can be grown in a laboratory where it continues its luminescing habit regularly. Its built-in clock is so accurate that it can tell when midnight comes even when it is deprived of the information of the rising and setting of the sun. When it grows in complete darkness it still luminesces at midnight, night after night, and it doesn't miss by more than a minute or two either way. Such timing is uncanny." (Henry & Rebecca Northen, Ingenious Kingdom: The Remarkable World of Plants, Prentice-Hall, N.J., 1970, p. 151)

EXAMPLE 3: THE INDIVIDUALITY OF TRANSDUCERS

Because of differences in their environmental exposure in the past, the present-day behavior of apparently identical transducers will differ. When measurements of differential quantities are made, it is therefore of utmost importance to prove that the measuring system output indeed represents the difference of the inputs, and NOT the differential behavior of apparently identical transducers.

The problem of measuring differences occurs often in engineering. Pressure drops across orifices, compressors, flow meters; temperature drops across heat exchangers; differentiao torques; differential vibration in modal analyses; differences in electrical potential, etc., are a few examples. Even a mechanical beam balance is a moment-subtracting device.

The basic problem of the measurement of differences between quantities is: TO MEASURE A DIFFERENCE INDEPENDENT OF ITS LEVEL. The quantities Q_1 and Q_2, the difference of which is desired, are each applied to a transducer. These two transducers, T_1 and T_2 are differentially coupled -- i.e., so arranged that their outputs subtract.

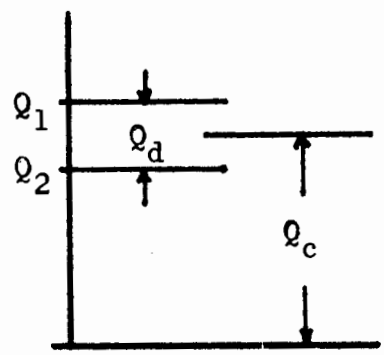

No measuring system can subtract two inputs without SOME evidence of their average level remaining at the output. The ability of the measuring system to reject this average level, or common mode, is called the COMMON MODE REJECTION RATIO, n, which is defined below (Ref. 4, Ch. 6):

$$n = \frac{\frac{1}{2}(T_1+T_2)}{(T_1-T_2)} = \frac{T_c}{T_d} = \frac{\text{(Average Gain of the 2 Channels)}}{\text{(Differential Gain between them)}}$$

For perfect subtraction, n must tend to infinity, or

$$T_1 = T_2 \quad \text{at all amplitudes and frequencies of signal.}$$

Given the individuality of transducers as a general principle, it is highly unlikely that the above condition can be fulfilled except approximately over a restricted range of amplitudes and frequencies of signal. The burden of proof that a correct differential measurement has been made is on the measurement engineer. There are very simple techniques and sub-routines in a test program, which can prove beyond reasonable doubt, that the differential data are valid, and not contaminated by common mode.

It is important to note that both ZERO SHIFTS and CALIBRATION CHANGES may occur due to common-mode-induced effects. This phenomenon is particularly well known for differential pressure transducers. In general, all differentially coupled systems are deviation-amplifying in that they exaggerate small differences in the characteristics of individual transducers.

THE DIFFERENTIALLY COUPLED SYSTEM AS DEVIATION AMPLIFYING

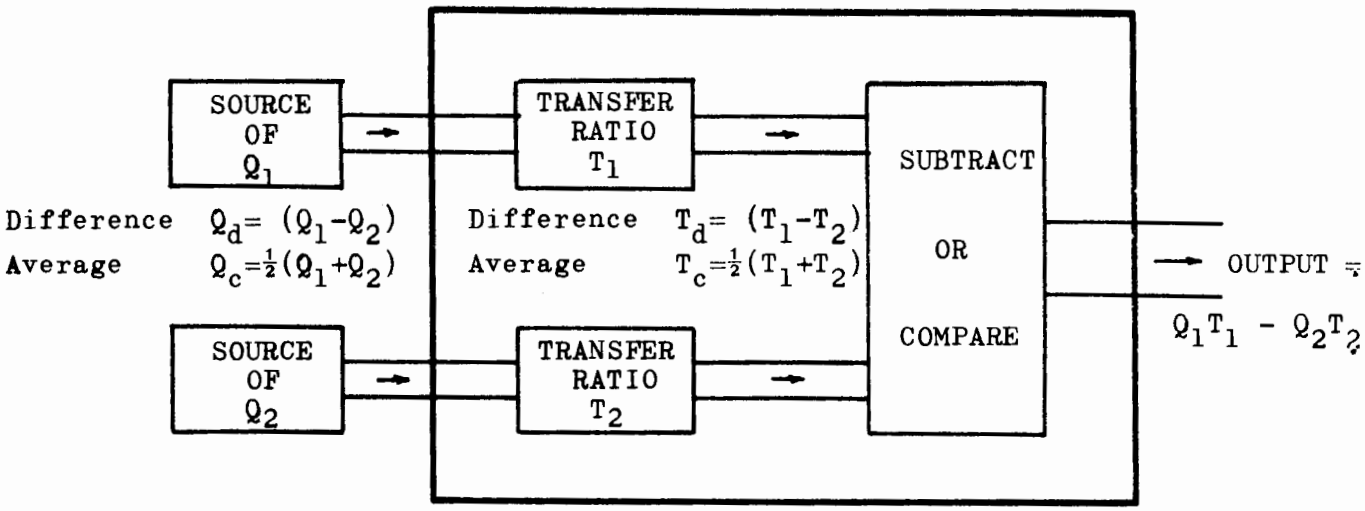

In the absence of losses across the boundaries: $\boxed{\text{OUTPUT} = Q_d T_c + Q_c T_d}$

A Differential Pressure Transducer

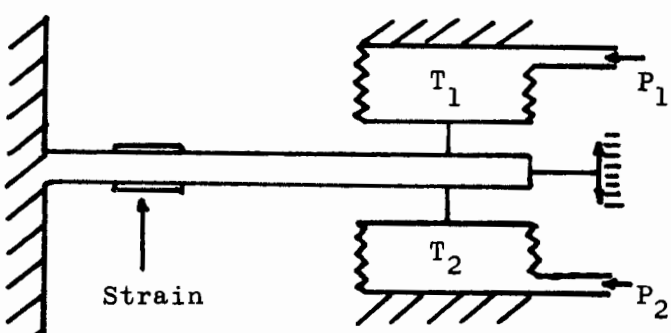

Opposed bellows, diaphragms or pistons, etc. End-displacement or strain read-out by any means.

$$T_{bellows} = \frac{\Delta(OUT)}{\Delta(IN)} = \frac{P.A - f}{P}$$

P = pressure A = effective area
f = elastic, inelastic & friction restoring forces

Note that even if:

- The loading effects at both input ports are the same so that no unbalanced-line problems exist.
- There are no local deflections of the push-rods between the bellows & beam.
- The beam is hysteresis-free, and of zero spring constant.
- The bellows are hysteresis-free and offer no restoring force. ($f = 0$)
- Beam and bellows are elastic and hence linear.
- So long as the effective area of the two bellows are different, the Transfer Ratios, T, or the Gains will be different !

$$T_1 \neq T_2$$

Can two bellows be manufactured with identical effective area at all pressure levels and at all pressure frequencies encountered during the test ? ? ? This is what must be proved and documented !

JET PROPULSION LABORATORY *California Institute of Technology • 4800 Oak Grove Drive, Pasadena, California 91103*

March 10, 1972

Department of the Air Force
Air Force Flight Dynamics Laboratory (AFSC)
Wright-Patterson Air Force Base, Ohio 45433
Attn: Mr. W. G. James, AFFDL/FGL

SUBJECT: 7th Transducer Workshop

Dear Gene:

Much to my regret I will not be able to attend the Workshop; travel budgets have been reduced even at out facility to such an extent that even an invitation to present a paper brief and act as session chairman did not carry enough weight to get my travel authorization approved.

Since I did promise you an input on my Error Band Concept, I have written a paper brief on it and am enclosing it herewith. May I suggest that whoever acts as my replacement as chairman read this paper brief to the session.

Because my cancelling out will require you to appoint someone else as chairman, let me, at least, make some suggestions:

(a) Loyt Lathrop, who works at Sandia and was chairman of one of my ISA Transducer Standards Committees;

(b) anyone attending that Paul Lederer would recommend on the basis of that person having been involved with my ISA transducer standards work;

(c) Ralph S. ("Steve") Rogero, of JPL, with whom I have discussed this matter and who would be willing to take over the chairmanship if you ask him to do so. His extension is x7522 at the Edwards Test Station of JPL.

If any sort of transcript, proceedings or minutes of the Workshop are intended to be prepared, I would appreciate receiving a copy of them.

My best wishes for a successful Workshop!

Sincerely,

Harry

Harry N. Norton
Member Technical Staff
System Design and Integration

Telephone 354-4321 *Twx 213-449-2451*

USE OF THE ERROR BAND FOR TRANSDUCER SPECIFICATIONS AND PERFORMANCE VERIFICATION

By Harry Norton, Jet Propulsion Laboratory

The error band concept was originally developed in 1957, while working on transducer development at General Dynamics/Convair, to simplify specifications and performance verification of transducers used in the ATLAS missile instrumentation program. Most transducers were used in applications where the measurand would vary frequently, over wide portions of the range, in increasing and decreasing directions, and with or without sufficient vibration to relieve friction in the transducer.

This led to the conclusion that tolerances for repeatability, hysteresis, friction error, and linearity can be replaced by a single set of tolerances on the maximum allowable deviation of any data point from a specified reference line or curve which represents the ideal calibration curve of the transducer. This envelope around the ideal, or theoretical, curve was termed error band.

Introduction of error band specifications resulted in higher production yields by transducer manufacturers, and lower unit cost, since the manufacturer now had more leeway in his individual transducer tolerances, For example, if a particular instrument design had inherently low hysteresis and good repeatability, the manufacturer could afford to be less careful in adjusting the transducer for linearity and still meet error band requirements. The previously necessary calculations of individual errors after calibration were also eliminated. This reduced the total calibration time by 20 to 40 minutes per transducer, with the same time savings incurred during each recalibration of the transducer.

A secondary benefit gained from the use of error band specifications was the creation of interchangeable calibration records. If the error band specified for a given transducer model is sufficiently narrow for overall data accuracy requirements, the calibration records of all transducers bearing the same part number can be considered interchangeable within error band tolerances. The data obtained from any of these transducers can then be reduced on the basis of the ideal calibration curve without referring to the individual calibration record for each transducer. If data of greater accuracy are required for a particular measurement at a later date, the individual record can be used for a data reduction rerun. If necessary, individual errors can then still be extracted from the calibration record and used to correct the reduced data even further.

Error bands can include two or more transducer characteristics depending on the conditions imposed on calibration. These conditions must always be established. In order to include repeatability, the error band is determined after the completion of at least two (but often three or more) calibration cycles. Effects of measurand overloads can be included in the error band if application of this overload is required during calibration. One or more types of environments can be adjusted to their extremes during calibration when an environmental error band is to be determined. Friction error can be excluded from the error band by dithering the transducer during calibration (friction-free error band) when it is known that the transducer will always be operating in the presence of sufficient vibration to minimize friction.

When used in a specification, the error band defines the maximum allowable deviation from a specified reference line or curve. It is usually specified with equal positive and negative error tolerances, for example, "±1.2 percent of full-scale output" (abbreviated "FSO"). The error band determined by a calibration or other test, however, defines the maximum actual positive and negative deviations from the specified reference line or curve, at any point within the range. These errors are usually not equal and may come out, for example, as "±0.5, -0.8% FSO."

An error band can be referred to a large variety of reference lines or curves ranging from a straight line between the terminal end points (0% Range, 0% FSO and 100% Range, 100% FSO) to a curve empirically determined only during an actual calibration, such as a "best straight line" or a mean-output curve. The error band may be made applicable over only a portion of the range, with no tolerances existing over the remaining portion or portions. It can also be "stepped," so that different tolerances apply over different portions of the range.

The error band applicable at room conditions, in the absence of any shock, vibration, or acceleration (unless one of these is the measurand), is the static error band. The band of allowable deviations of output values from the reference line or curve under these static conditions, and the line or curve itself, define the shape of the static error band. The output values are always measured over at least two consecutive calibration cycles to include a minimum determination of repeatability.

The static error band of a linear-output transducer is commonly referred to a straight line between either actual end points (as in end-point linearity) or terminal end points set at "0% Range, 0% FSO" and "100% Range, 100% FSO" (as in terminal linearity). A static error band referred to a terminal line, as specified and as it may result from a static calibration, is illustrated in Figure 2. When actual end points are used, it must be specified during which portion of the calibration they are to be obtained, for example, "end points averaged from two successive calibration cycles" or "end points obtained during the final calibration cycle."

When the output-vs-measurand relationship of a transducer follows a known nonlinear relationship, the static error band follows the theoretical curve to which it is referred. This is illustrated in Figure 2.

A static error band may show different tolerances applicable to different portions of the range. Such a "stepped" error band is illustrated in Figure 3.

Narrower static error bands can be obtained when linearity, or conformance to any predescribed curve, is not required. The absence of such a requirement is usually connected with an ability to reduce final data from a complex curve, different for each transducer. This type of data reduction is greatly facilitated by use of a computer. An example of such an error band is shown in Figure 4. This static error band is referred to the curve through mean output readings obtained during consecutive static-calibration cycles. Such a curve is called a mean-output curve. It includes hysteresis, repeatability, and friction error.

The selection of a reference line for a static error band of a transducer with a bidirectional range frequently involves the consideration of its intercept with the zero-measurand level. The simplest reference line is a theoretical slope or a terminal line, or a theoretical curve if the output is not intended to be linear. Figure 5 illustrates an actual example of a static error band referred to a terminal line. If a straight line between actual end points is used, tolerances must be established for the output at zero measurand as well as for the end points. Any reference line can be used equally well for transducers with bidirectional output and with unidirectional output. A stepped static error band, narrower near zero measurand than near the end points, has been found useful for some of the more specialized measurement requirements.

The error band concept can also be applied to temperature effects on a transducer's calibration curve. It is well known that the output-vs-measurand characteristics of a transducer are subject to change due to use of the transducer at various points of the specified operating temperature range.

The operating temperature range of a transducer is the range of environmental temperatures over which it must perform within specified error limits. When returned to and stabilized at room temperature after exposure to any temperature in this range, the transducer must again perform within original static error limits. Temperature errors are always determined after stabilization at the new temperature, usually at one of the extremes of the operating temperature range so that maximum errors can be measured.

In many types of transducers temperature effects will cause primarily a parallel displacement of the calibration curve, the thermal zero shift, and a change in the slope of this curve, the thermal sensitivity shift. These shifts are shown separately in Figure 6. They are usually stated in percent of full-scale output per degree Fahrenheit or Celsius. Knowledge of these individual errors is useful when the environmental temperature is known while a measurement is being made and when suitable corrections can be made to final reduced data.

When this environmental temperature is not known (except for the fact that it is within a known operating temperature range) and when changes in other characteristics such as hysteresis, repeatability, and friction error must also be considered, it is more useful to state total thermal effects as temperature error or as the temperature error band. Temperature error is the maximum change in output, at any measurand level within the range, when the tranducer's temperature is changed from room temperature to either of the two extremes of the operating temperature range (see Figure 7).

The temperature error band is the error band applicable over the operating temperature range. It includes all static errors, their increases or decreases due to thermal effects, and all calibration curve shifts (see Figure 8). All errors are referred to the same reference line used to establish the static error band. For most transducer applications the use of the temperature error band in specifications and for performance verification is probably the simplest way to define temperature effects; it also makes data reduction easier.

Similarly, error bands applicable under various other environmental conditions can be specified. Some of these, however, especially the vibration error band, have been found much less useful than the static and temperature error bands. Acceleration error and vibration error have been found more convenient to verify than the acceleration and vibration error bands.

The error band concept originated in the aerospace industry. Specifications in terms of error bands have since come into widespread use. Many transducer users have analyzed the nature of their measurements, their measurement accuracy requirements, and the overall accuracy of their measurement system, and have concluded that error band specifications would best serve their purposes in a majority of applications.

All illustrations used in this paper brief, by the way, are taken from the author's "Handbook of Transducers for Electronic Measuring Systems," published by Prentice-Hall, Inc., in 1969.

END

NOTE: This paper brief was prepared for presentation at the Range Commanders Council, Telemetry Group, 7th Transducer Workshop (Albuquerque, N. M., 4-6 April 1972).

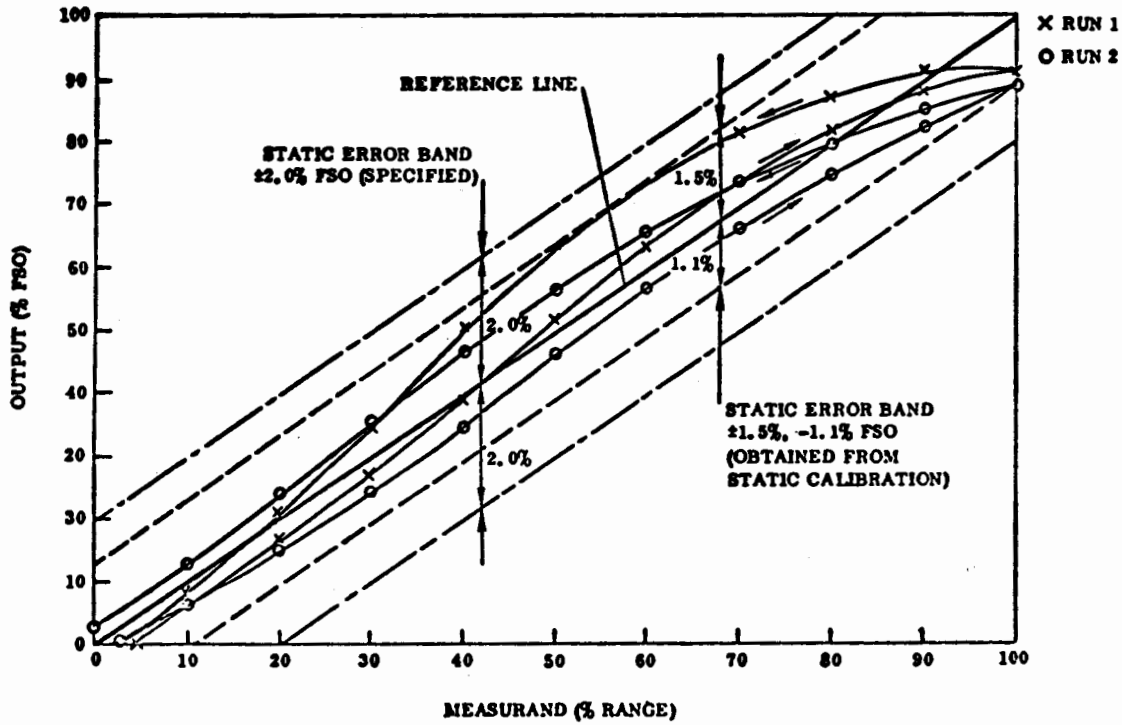

Fig.1 Static error band, referred to line between "terminal" end points (error scale 10: 1).

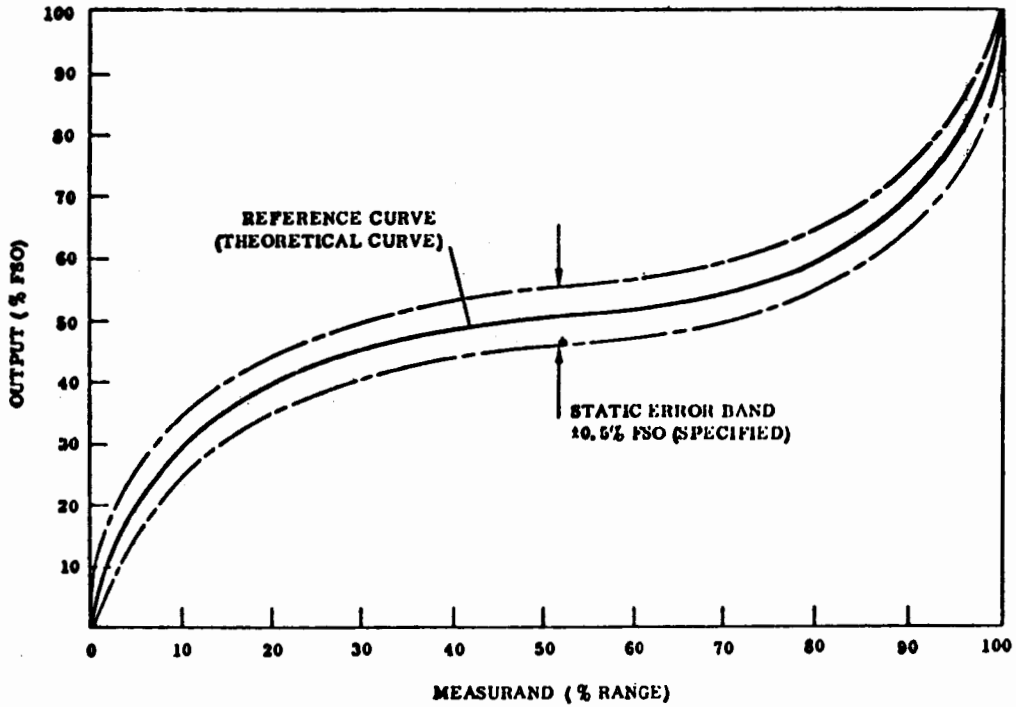

Fig.2 . Static error band referred to theoretical curve (error scale 10: 1).

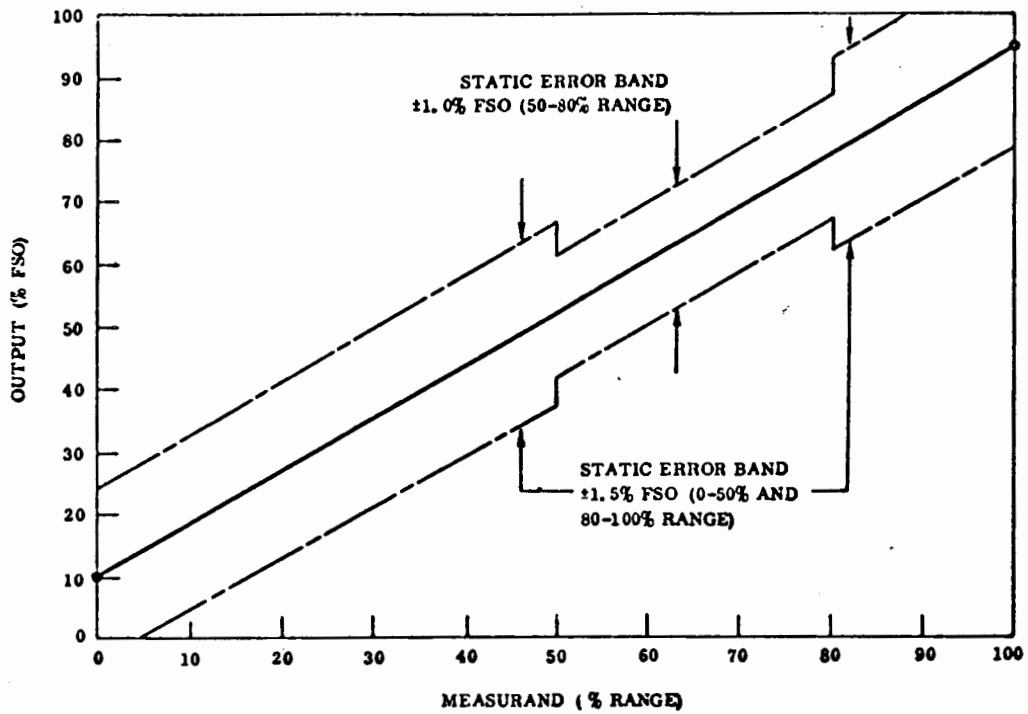

Fig.3 . "Stepped" static error band referred to straight line between theoretical end points 10% FSO @ 0% range, 95% FSO @ 100% range (error scale 10: 1).

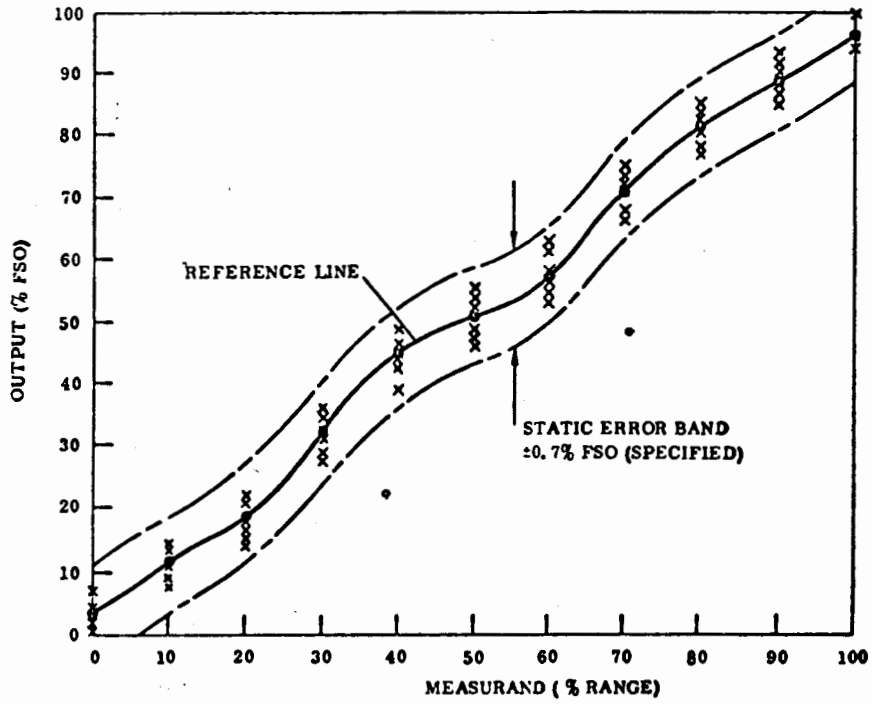

Fig.4 . Static error band referred to mean-output curve (error scale 10: 1).

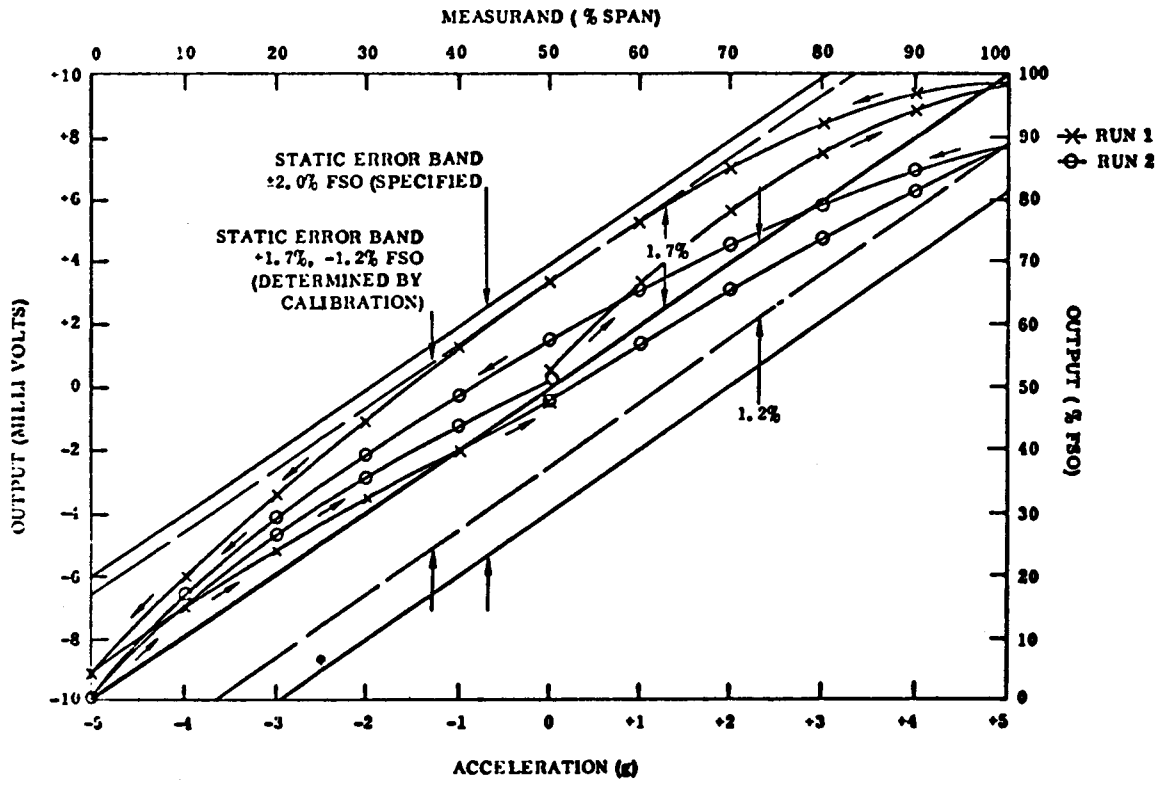

Fig. 5. Static error band for ±5 *g* acceleration transducer, referred to straight line between terminal end points (error scale 10: 1).

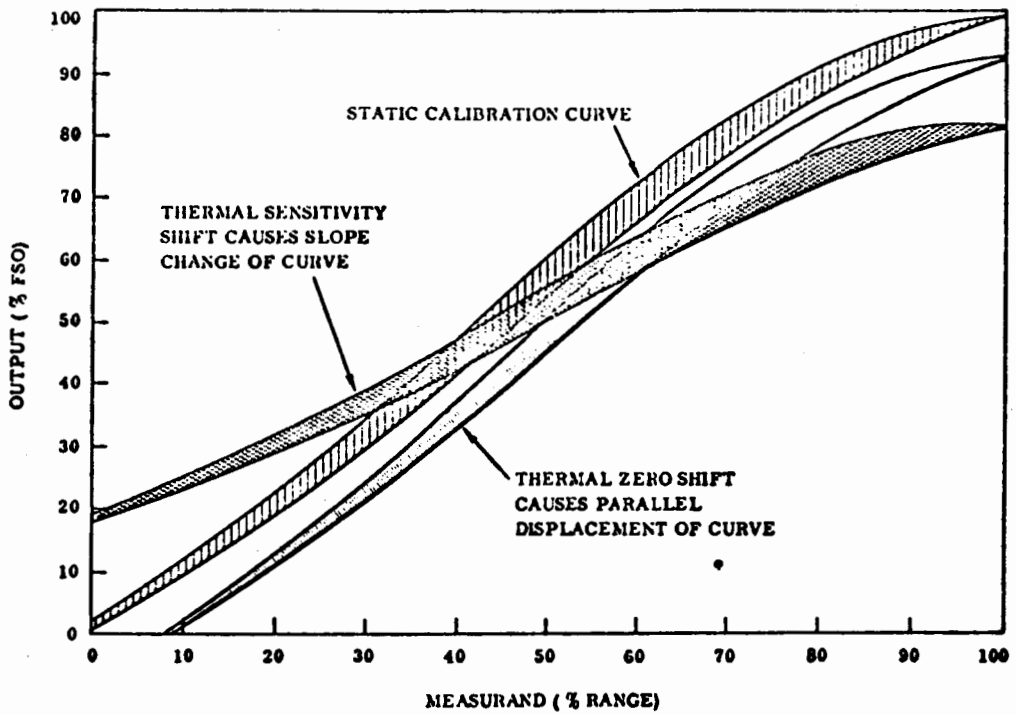

Fig.6 . Thermal zero and sensitivity shifts, shown separately (scale of errors exaggerated).

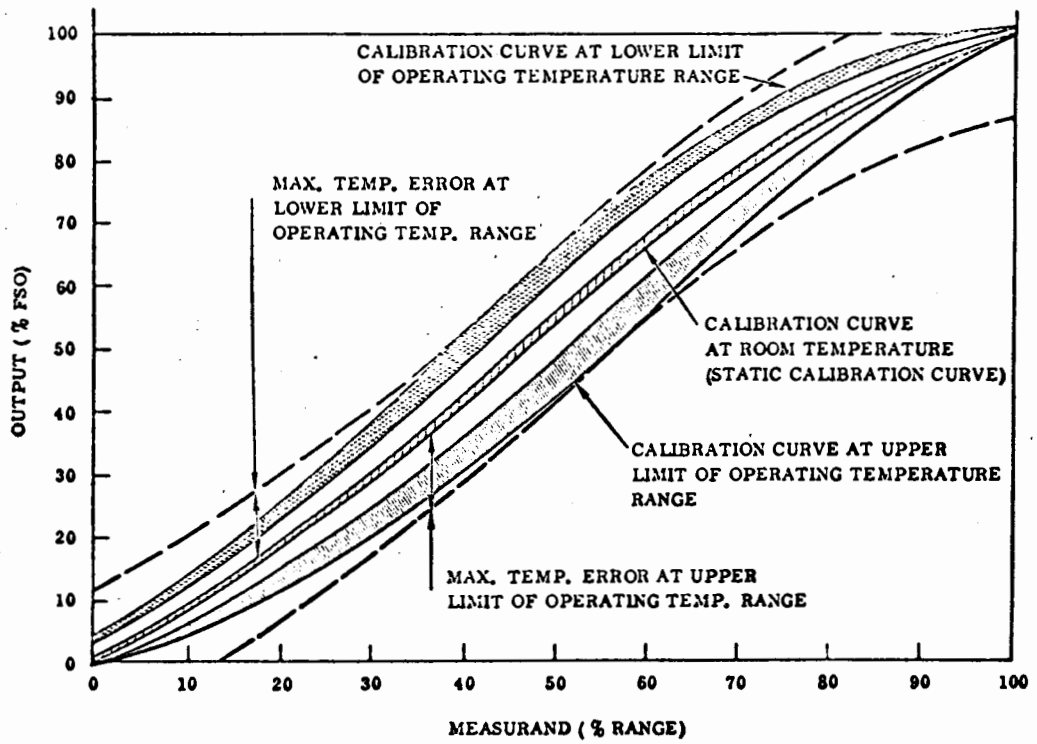

Fig. 7. Temperature error (at operating temperature range limits) (scale of curve shifts exaggerated).

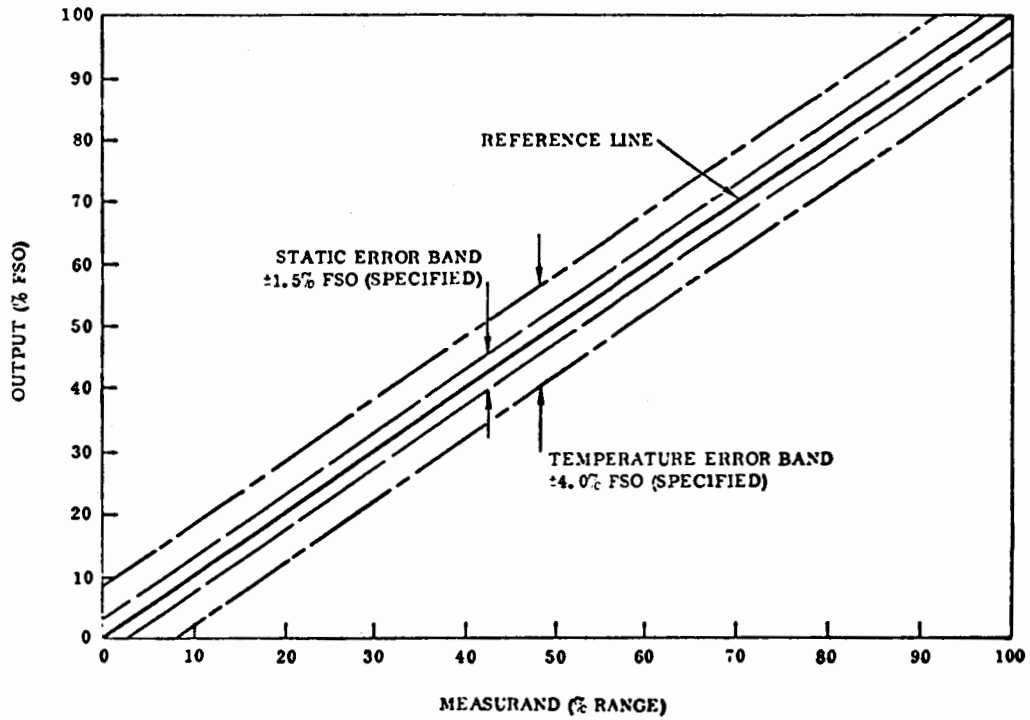

Fig.8 . Temperature error band referred to straight line between terminal end points (error scale 2: 1).

DISCUSSION SUMMARY

SESSION V

Highlights of the Discussion Period:

1. Q Is reliability information data normally furnished by the transducer manufacturer?

A The manufacturer identifies the effects of such things as temperature, vibration, shock, etc., as they may influence a given performance specification. These often do not aid you in trying to correct your data.

You have to design your measurement system to be within the tolerance band required to produce meaningful experimental data without having to attempt sophisticated operations on the raw data.

2. *Comment*

Specifications often state 1/2 percent accuracy. This is really a misstatement. What is really wanted is 99.5 percent accuracy. This should be clarified for all users of transducers and their related systems.

3. Q When inquiring about error band, do you accept the band as defined by the manufacturer or that of the experiment?

A We would determine the specific performance over the noted parameters.

4. Q Would the error band be determined over the parameters individually or collectively?

A Normally, the evaluation would be done on an individual basis unless specified to be evaluated on a collective basis. This should be established prior to the preparation of the specification.

5. Q What techniques are available for on-line calibration and what are some of the problems related to them?

A One technique used in gas turbine testing is operating the system on two different levels of steady-state conditions which encompass the extremes of the planned experiment. The transducers used to evaluate the dynamics of the 12,000 Hz system operating at 300°F were a quartz type.

As the blade would pass the transducer, which was mounted in the shroud, there was a small volume change. This set up a vibration with the same basic repetition rate; namely, 12,000 Hz. Since crystal transducers are very good vibration pickups, differentiating the pressure information from the vibratory noise can be a problem.

Comment

The manufacturer should provide the pressure/volume relationship for the quartz crystal transducer. You also have to know the size of the crystal and the rigidity of the support.

6. Q Do you tell the manufacturer exactly how he is to calibrate his transducer to meet your specifications?

A Where paramount, you would have to give him some sort of guidance in your test specification.

7. Q What is the relation of the error band that you set up in the specifications to the actual measurement? Example: You may not have the transducer stability at a particular temperature. How do you add these things in?

A Whatever errors creep in for any type of specification, if you specify them individually which has been the norm, you then have the problem of how to combine them. By specifying an error band, you are asking the manufacturer to guarantee you will not have a point out of that band.

8. Q Are any of the manufacturers using the error band concept?

A Only in response to the customer's requirements. It is not in widespread use. I do not think that the error band concept is one to lump everything into. It is applicable for 70 to 80 percent of the various parameters or particulars. However, there are other parameters which you should stipulate individually.

Comment

Several SAE Committees have new specifications which utilize the error band concept.

I think there may be a built-in trap in the error band concept. In its application, you have the tendency to lump your errors and thereby lose sight of what they are.

Encouraging the use of the error band concept saves time but in the long run, may compromise or extend the experiment. The process of defining what the parametric error limits are and how they may influence the experiment is very worthwhile and aides in becoming familiar with the hardware.

I agree in two areas: (1) you get the largest error where you want the highest accuracy and (2) you should estimate the degree of uncertainty.

9. Q The use of voltage insertion is fine, but if a particular model is in the test environment for a period of time, you might have a natural mechanical breakdown. How can this be detected?

A If you cannot get to your transducer and cannot introduce a known change in the parameter which is being measured, you do have a problem.

Where possible, we have put the whole system in the simulated test environment in an effort to establish the error band and changes in it as a function of time or test cycle.

10. Q Is is possible to design transducers with built-in test?

A We have given this subject a great deal of thought. In some cases, it is technically feasible but costly. In other cases, you may have to compromise performance.

The complexity of design may introduce more problems than are solved by using an on-site calibration feature built into the transducer.

The use of two transducers at the same location may be less costly and complex than trying to develop a transducer with built-in calibration.

Comment

The use of two transducers to measure one experimental variable does solve the problem when you get an output from both, but they do not agree.

One technique used for built-in pressure calibration is back pressure or negative calibration, which can be returned to ambient conditions just prior to testing. However, with the crystal transducer, you may get the crystal breaking away from the front surface thereby altering its performance in the normal test mode.

11. Q Since the community would like inexpensive transducers and mass production is the only way to keep cost of a given item down, would the transducer user agree to the increase in costs if built-in calibration were incorporated in all transducers?

A I would rather go with the cost. We are fooling ourselves if we try to cut a few dollars off the cost of transducers. I would prefer a quality transducer. We are much better off with the more expensive item if it provides a related improvement in reliability.

Comment

If you go to the financial statement of all transducer manufacturers, you would find the industry has a problem. It is just not profitable to do all the things you are asking. The transducer you buy has 5 to 6 hours of direct labor not including engineer, etc.

We are shipping 2,000 aircraft instrument transducers worth between $500 and $1,000. In this case (large quantity), we agree to supply instruments with identical performance characteristics as defined by the specifications. Thus, it is possible (technologically) to meet some demands if the user is willing to pay.

12. Q The experimenter or user has to sell his management. Does the technical contracting official have a comment?

A It is always a tough fight in dollars and cents. The experimenter must be more specific in indicating why he needs a given performance so the contracting official can be of greater assistance.

Comment

In experimental programs, the cost of the instrumentation is not a major cost item. However, unless the cost factors are broken down, management is not in a position to make the proper decision. It is a lack of communications between the experimentalist and his management, the scientist and his procurement specialist, the user and the manufacturer.

13. *Comment*

Certain standards call for electrical calibrations (or "R" cal) before and after tests. This would check the bridge circuit but would not determine that the diaphram was missing on a pressure transducer.

Using a differential pressure transducer, one may listen to the output (audio). You can usually identify static (random noise).

14. Q How do you use the audio technique when you have 400 gauges?

A Listen to the important channels.

14. Q Listening is good. What do you do when you bury the transducer in the ground?

A ?

16. *Comment*

In the field of medicine, there is a real educational job in getting the profession to accept transducers. You get tissue build up which changes the sensitivity; thus, there must be a means of determining the sensitivity from time to time.

On-line calibration is a desirable feature, but it does not eliminate the need to know your system.

17. Q What is the cost for built-in calibration? Is it an optional feature?

A Many manufacturers have optical extra-cost features listed for transducers. However, the catalogs are not all inclusive. Therefore, it may be necessary to inquire about a given option separately.

Comment

There is a problem with built-in calibration for airborne tests. Some vehicles are so space limited that there is not room for another switch. Thus, built-in calibration could rule out the use of a certain transducer.

18. *Comment*

The bulk of our problem has not been with the transducer. The limited dynamic range of the rest of the system, system weight and costs are more of a problem.

The mechanical and electrical characteristics of the transducers are usually quite good. The occasional mechanical failure of the transducer under critical test conditions is our biggest problem source.

SESSION VI

NEEDS AND PLANS FOR ACTION

Mr. Patrick Walter, Chairman, Transducer Committee

DISCUSSION SUMMARY

SESSION VI

Highlights of the Discussion Period:

Session VI was entirely a discussion session chaired by Mr. Pat Walter, Chairman, Transducer Committee. The following are specific areas where attendees agreed that the Transducer Committee should direct its efforts (listed essentially as they were developed - no priority intended):

1. Standardization

   a. Test equipment and procedures including statistical measures and methods for use in both specification sheets and in test reports.

   b. Dynamic Test and Evaluation Equipment and Procedures

   c. Parameters to be listed on Specification Sheets

   d. Terminology

   e. Procedures and "Fly Sheet" requirement for Acceptance and Reliability Testing.

2. Compendium Type Listing of Transducers

   a. General Parameters (e.g., ISA Compendium)

   b. Specific Parameters (e.g., T.I.C. Type Service)

3. Improve Communications

   a. Test Results

   b. Experience

   c. Consultation

   d. Applications Traps (Boo Boos - See Appendix)

4. Objective Identification of User Needs for Research, Development, New Products, etc.

5. Integration of Capabilities of User, Manufacturer, Government, and University Groups (A periodic news letter was one suggestion.)

6. Quantitative Determination of Pyroelectric Effects

7. Prepare "Recommended Practices" for:

   a. Measurement Systems Design

   b. Experiment Design

   c. Reporting Results

8. Lobby for Needed R&D

9. Increase recognition by management that measurements can no longer be taken for granted as routine "off-the-shelf" capability.

10. Develop and publicize methods for analysis and design of total measurement systems for guaranteed accuracy of results.

The Transducer Committee agreed to consider these suggestions, assign priorities, and undertake as many as can be attempted within our membership's capability.

APPENDIX 1

A COLLECTION OF "BOO-BOO'S"

Compiled by: W. G. James, Workshop General Chairman

BOO BOOs

INTRODUCTORY COMMENTS

The Transducer Committee decided to experiment with the inclusion of Boo Boos in this Workshop described as a brief description of a measurement attempt which resulted in large errors in spite of the use of precision equipment. These are submitted anonymously and form a collection of non-recommended non-practices or application traps for the unwary.

Some of these Boo Boos were read aloud during the meeting which typically resulted in much knowing nodding of heads and in the sharing of other similar experiences. It appeared evident that such occurrences are not uncommon although not publicized.

An attempt to group these Boo Boos by similarity was abandoned in that each write-up contains segments of commonality with all write-ups. The Boo Boos submitted are reproduced in the following pages without comment.

BOO BOO

Carrier type strain gage amplifiers had been used for years on airborne vehicles using an r.f. link to telemeter the data.

One manufacturer came up with a d.c. amplifier which looked promising. Some were purchased and immediately we began having trouble with r.f. interference. The r.f. signal got into the strain gage channels with the result that the data was worthless.

On subsequent orders it was necessary to specify thorough r.f. filtering and shielding. This in turn gave the manufacturers many headaches until the problem was licked.

BOO BOO

When measuring the diode leakage from a diffused strain gage pattern to the substrate, there are two pit-falls which can make difficulty when the unwary person tries to check previously run data. They can both cause sizable errors.

A. The diode formed between gage pattern and substrate is like any other silicon diode and is photo sensitive. It must be measured in the dark if true diode leakage is to be measured.

B. The diode leakage measured from P type gage to N type substrate is different than diode leakage measured from P type gage to N type substrate to another P type area thus making a PNP diode system. It is similar to the comparison between I_{CBO} and I_{CEO} for a transistor. I_{CEO}/I_{CBO} can be from one to a maximum of h_{fe}. We have observed in our case a range of 2 to 10 for this ratio.

BOO BOO

In the dynamic calibration of a low frequency accelerometer, experimentally measured values of phase shift did not agree with theoretical ones. Phase shift was measured on the screen of an oscilloscope with a dual trace preamplifier which displayed the accelerometer output and a reference signal. Careful checking of the setup revealed the input switch setting for one channel of the preamplifier was for "DC" coupling, the other one for "AC" coupling. When both were set to "DC" coupling, phase shift measurements were as predicted by theory.

BOO BOO

Given: Need to interface piezoelectric transducer/source follower system to recording electronics.

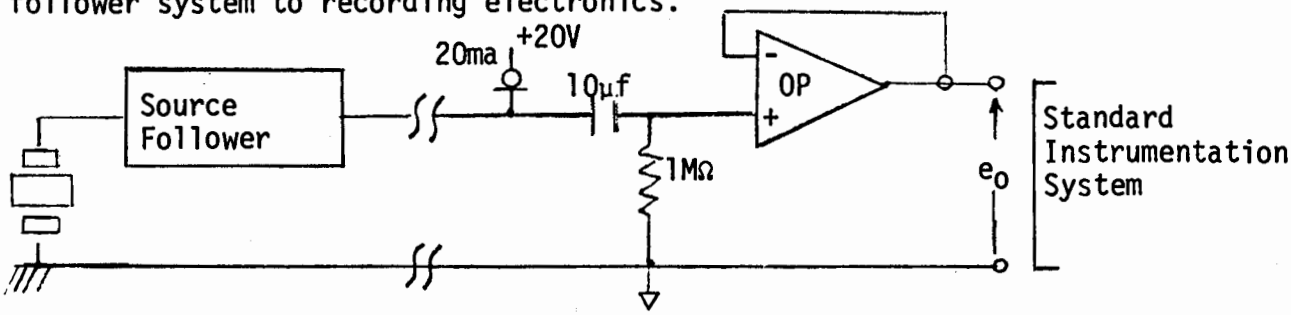

System: The above configuration was chosen. The RC network decouples the nominal 18 volts riding on the input line. The required time constant forced the selection of 10 µf and 1MΩ, yielding a time constant of 10 seconds. The op amp has very high impedance in this configuration ($Z_{system} = Z_{open\ loop}$ x open loop gain).

Z_{system} = 10 MΩ x 100,000 = 1,000,000 M .

This is 1,000,000 times larger than the 1MΩ of the RC, and will look like a good match.

Dilemma: When the circuit is connected, e_o rises to 2 volts without exciting the transducer.

The Culprit: Op amps draw bias current, a small current which must be supplied at all times. The op amp chosen had a bipolar input requiring 2µa bias. The 2µa came through the 1MΩ, causing a drop of:

$$E = IR = (2 \times 10^{-6}) \times (1 \times 10^{6}) = 2 \text{ volts.}$$

Solution: Use an FET input op amp. Bias currents of 2na are common. Now this current supplied through the 1MΩ is:

$$E = IR = (2 \times 10^{-9}) \times (1 \times 10^{6}) = 2\text{mV.}$$

The 2mV can be trimmed handily on many op amps. If that isn't good enough, some of the newer FET op amps have bias currents in the low picoampere range.

BOO BOO

A few years ago rocket powered flight vehicles were having problems when one stage completed burning and separation from the next stage took place. A simulated separation was set up at a ground test facility to investigate this problem. This was to be a one shot test so the data could be used to determine whether to proceed with a vehicle already on the launch pad.

At the start of this set up there were a large number of measurements to be made. This number rapidly increased. The normal capabilities of the test facility was quickly reached and just as quickly exceeded. The final number was more than twice as many as the facility was designed to accommodate. Temporary systems were located and moved in and set up in hallways and darkrooms and in machine shop areas. The "rats nest" of interconnecting cables was massive.

We anticipated trouble. To reduce the trouble causes we set up each system individually and took special care to prevent ground loops. We calibrated the pressure gages with deadweight testers through the entire system. This assured reliable total system check. We deadweight calibrated the load cell systems the same way. We calibrated thermocouple systems with voltage insertion and then applied heat to each channel as a sure polarity check. We laboratory calibrated accelerometer systems and after final installation hammered the area to insure system response. All systems were finally rated OK. Each one in turn had been checked one channel at a time.

The automatic sequencer was started:

T minus 60 seconds - Camera lights on low
T minus 40 seconds - Slow speed chart recorders on and final calibrates taken
T minus 35 seconds - Camera lights on high
T minus 30 seconds - Mag tapes on and final calibrates taken
T minus 15 seconds - Slow speed cameras on
T minus 10 seconds - Final siren blast
T minus 5 seconds - Firing circuit armed
T minus 3 seconds - High speed recorders on
T 0 - Firing signal applied to 7 seconds time delay squib

T plus 1 second - All systems have green light "OK"

T plus 2 seconds - Main circuit breaker trips due to overload, all instrument systems go dead!!!!

T plus 3 seconds
T plus 4 seconds
T plus 5 seconds
T plus 6 seconds

UNORGANIZED PANIC!

T plus 7 seconds - Ignition

T plus 8 seconds through T + many days - ORGANIZED PANIC

BOO BOO

During a rocket motor firing a potentiometer was mounted so as to measure the deflection of the rocket motor case while it was pressurized. The case at the measurement point had a spherical curvature and the potentiometer was positioned with a ball tip and was spring loaded to push against the case. Motion was anticipated to be one dimensional and parallel to the potentiometer shaft.

Due to unexpected forces, the case motion became two dimensional and the potentiometer shaft end slid along the case curvature resulting in a large measurement error.

On subsequent tests, a one inch square flat Teflon coated plate was mounted at the measurement point on the case perpendicular to the potentiometer shaft. The potentiometer shaft end rested on the Teflon surface and although the case motion was lateral, the potentiometer shaft maintained a true position.

BOO BOO

After having calibrated 12 channels of pressure gages, we fired an 8 charge. Looking at the acquired data, one channel showed a positive dynamic cal and a positive electrical cal but a negative pressure time history.

Upon examination we found that the station was calibrated for the wrong pressure and the mag-tape recorder when saturated with the shock wave input gave a very good negative pressure-time history, when other checks showed everything was normal.

BOO BOO

Amplifiers operating at high gain being saturated due to presence of transducer zero measurand output greater than saturation voltage divided by gain.

BOO BOO

Input impedance of a DVM changing drastically when it ranges from one sensitivity to another can load a resistive type transducer.

BOO BOO

Being a professional, a real expert, as most of us are, I never make a technical error; however, there is one mistake I make repeatedly: believing what I see or read or hear and not personally verifying it. About a year ago we were doing a flight test instrumentation job on an aircraft that had a data acquisition system aboard built by a major aircraft company. We were assured by the aircraft company people that all it took to convert their signal conditioning for bridge type transducers was to plug in their bridge type card in the right slot. So, at about midnight with the test scheduled for 0400 take off, we found that the reason our bridges wouldn't balance was a missing wire in the patch cables which had been left out because it wasn't used with the cards they had been using. These were hard wired AN connectors, about a dozen of them that had to be rewired. Result: Test delayed by instrumentation for 24 hours. My mistake, believing what I was told about the system and not checking it out for myself.

BOO BOO

Several years ago, we ran some shock tube tests of various mounting configurations for a new high pressure transducer. Although the transducer was rated for 70 KPSI, the tests were run at 2 KPSI because of shock tube limitations. After finding considerable oscillation of the mounting cavity when filled with either air or grease, we decided to try other materials. One particular mixture gave unexpectedly good results, nearly square step response with neither loss of risetime nor objectionable overshoot. Tests at 500 and 1000 PSI gave comparable results, so we started using the material for all tests. It was some months before peoples complaints about unlikely data prodded us into doing something we had intended to do at the beginning, including the material in static calibrations to full pressure. It was then painfully obvious that the "ideal" material at 2 KPSI became pretty stiff at 20 KPSI and down right rigid at 50 KPSI "and the truth was not in it."

BOO BOO

Two high stability strain gage pressure transducers with a manufacturers value of ±0.05% FS maximum "non-repeatability" showed differences in sensitivity of 0.16% FS and 0.3% FS between two calibrations. Prior to the second calibration, the transducers with integral male flare pressure fittings had been disconnected from the pressure manifold and then reconnected carefully to assure a leak-tight connection with the minimum tightening torque. Additional calibrations, made without further disturbance of the pressure connection, but following long periods of storage and pressure cycling, showed transducer performance to be within manufacturers' specifications. This suggests desirability of in-place system calibration of "high-accuracy" transducers.

BOO BOO

Test program required facilities to load sample parachute risers to 5000# in tension under dynamic conditions. The test configuration and instrumentation consisted of a 50' drop tower and a strain gage link installed in series with the snubbing cable. The parachute harness was installed on a 250 pound torso test dummy. Test item was raised to a height that normally would produce a peak loading force of 5000# and then released. The force recorded was less than 2500#. Immediate reaction was to increase the drop height. This was done until finally the strain link broke. Post investigation disclosed that only half of the bridge output was being recorded and in actuality the first reading was very close to 5000#.

If there is any lesson to be learned from this situation, it is a lesson in "keeping your cool." Don't always jump at the easiest solution to an instrumentation problem. Take "time out to think."

BOO BOO

Setting the gain on a charge amplifier such that the feedback capacitor is less than the transducer capacity. The amplifier output will be distorted.

BOO BOO

On transducer conditioning power supplies, the output voltage momentarily going to power supply limit when switching voltage ranges, because the make-before-break contacts were not making up.

BOO BOO

I was playing visiting expert to another installation during firing tests of a prototype weapon. One requirement was measurement of hydraulic pressure and flow. Neither the host nor I had much experience with hydraulics, but use of the strain gage flowmeter seemed straight forward. The records looked lovely, but somehow we kept getting flow rates entirely too low for either the predicted or measured operation of the system. After checking every aspect of the recording system from calibration resistors to cable connections to amplifier gains to recorder channels, we sent the meters back for recalibration. They were reported to follow their original calibrations. Only after a couple more days of panic and head scratching did we realize that we had been using linear scaling of the single calibration step, and the flowmeter characteristic was logarithmic.

BOO BOO

We were trying to measure 50-100 psi region from a steel cased cylinder of explosive detonated about 6 feet above a 4"-thick steel plate.

The signals were quite erratic, and the waveshapes were quite irreproducible. To try to salvage something from the data, we at least would like to know the shock arrival time at the first two gage positions (100 and 50 psi); however, within the capability of the recording system, the "disturbance" arrived at both positions simultaneously---quite impossible for an air-shock.

It turns out that what we thought were the pressure-time signals produced by the transducers by the shock wave were actually electrical noise, produced by the interaction and collision of the case/explosion products with the steel plate. The noise was an order of magnitude larger than the expected pressure signals.

BOO BOO

A manufacturer of piezoelectric accelerometers supplied a special raised mounting stud with each instrument to be used with rough surfaces, on which it would be difficult to properly mount the accelerometers with full base contact. He pointed out that the use of this special stud would change the accelerometer systems resonant frequency. This was confirmed during testing, however it was also found that the overall sensitivity of the accelerometer was about 20% different when it was mounted on the special stud, compared with being mounted with the entire accelerometer base flat on the mounting surface.

BOO BOO

The measurement of vibrations on the reflector of a radar dish was desired while the vehicle on which the dish was mounted traversed rough terrain. Accordingly an aluminum cube 1 x 1 x 1 inch was welded to the thin (1/16 in.) reflector's aluminum skin and three piezoelectric accelerometers attached to three faces of the cube. Measurements made with this system totally ignored the influence of the newly created mass-spring system (accelerometer block-skin compliance) on the data taken, thus likely leading to serious errors.

BOO BOO

A different laboratory created a similar error-prone system by mounting a piezoelectric accelerometer at the end of a cantilever bracket. This accelerometer was to sense high frequency longitudinal vibrations in the nose cone of a small, high speed rocket. Again the accelerometer-cantilever beam combination resulted in an additional mass-spring system, which could adversely affect the data sought.

BOO BOO

Watching a routine static calibration of a telemetry pressure transducer, I noticed that the technician carefully exercised the dial gage which indicated the applied pressure by applying the full scale pressure ten times in succession. He then proceeded to do the same to the transducer to be calibrated. When I pointed out that such exercise of the transducer prior to calibration would result in a set of calibration data indicating unrealistically low values of hysteresis, he showed me the printed step-by-step calibration procedure he had to follow. It stated that all pressure transducers were to be exercised before calibration.

BOO BOO

I was calibrating an accelerometer on a dual centrifuge in the 2 to 10 Hz region. The procedure was to compare the known output of the thermocouple voltmeter with the unknown output of the transducer using a vacuum tube voltmeter as an indicator. The frequency of the oscillator being used as a power source for the thermocouple voltmeter was being matched to the transducer frequency to within 0.1 Hz. It turned out that the low frequency roll off of the vacuum tube voltmeter was sufficiently steep at 2 or 3 Hz that a mismatch in frequencies of 0.1 Hz caused an error of over 1%.

BOO BOO

An experiment was organized to measure the rate of ablation and shape change of the tip of a reentry vehicle during reentry. The tip was put into a radioactive condition so that various Gamma radiation detectors would see quantity of tip material as a function of Gamma rate through collimated holes through high Z Gamma absorbing materials. Extensive ground testing established the quantity of material along various rays as a function of Gamma count rate. The calibration signal would naturally reduce with reduced radioactive material.

During actual flight two unexpected things happened. First, the count rate, shortly after the start of vehicle reentry, was much larger than anticipated and second, the count rate kept building up instead of reducing as expected. The signal actually reached a value an order of magnitude higher than expected, thereby rendering a "one shot" experiment useless.

What happened? The eroded radioactive tip material, in gaseous state, flowed back along the vehicle. The radioactivity from this material in transit entered the detecting system which was unshielded from the transit direction.

BOO BOO

During testing in the polaris program, it was desirous to measure the water impact pressure on the missile as it was ejected from below the surface. To assure wide frequency response, piezoelectric, flush diaphragm, pressure transducers were used. Unexpectedly large pressure transients were recorded. It was finally found that these pressure transducers were quite sensitive to thermal transients. Much of the "pressure" signal was subsequently found to be caused by the thermal transient seen by the pressure transducers as the missile was ejected from the ambient environment of the submarine into the cold sea.

BOO BOO

A piezoelectric, ring shaped, accelerometer produced sharp spikes in its output and displayed distortion during some simple vibration testing. The problem was traced to an over-long mounting screw which bottomed in its threaded mounting hole, before the accelerometer was properly tightened to the mounting surface. The final clearance between screw head and accelerometer was so small as not to be readily noticeable. Tightening of the screw with the proper torque, in this case, did not prevent poor data.

BOO BOO

Two boo boos using dead-weight pressure testers that gave us unexplainable pressure calibration error until we finally tracked them down.

1. Calibration of low range pressure transducers (on the order of 0 to 5 or 10 psid or psig) using a liquid filled dead-weight pressure tester.

Sensitivity of the pressure transducer for the first increment of pressure often seemed to be different than the sensitivity for the higher pressures. After much study of the problem, we found that this sensitivity difference was due to our having placed the transducer inadvertently at some elevation different from the elevation of the piston of the dead-weight tester. For precision measurements, it is important that the transducer diaphragm and the dead-weight tester piston be at exactly the same level.

2. Calibration of high range pressure transducers (on the order of 0 to 3000 or 5000 psig).

In calibrating high range pressure transducers using a liquid filled dead-weight tester, frequently the output of the transducer exhibited a transient zero shift that recovered after a few minutes time. This shift was later found to be caused by the temperature change of the sensor diaphragm, which in turn was caused by the compression of some trapped air in the fluid system in the vicinity of the diaphragm of the pressure transducer. This error is removed by checking the system carefully and eliminating any trapped air before making the measurements.

BOO BOO

Several years ago I was running a test in a wind tunnel. It was customary to have a night shift hook up the equipment so that we could get an early start in the morning.

The next morning I turned on the equipment but nothing worked. The test was on an airplane propeller and required bringing leads in from the propeller blades through slip rings.

An inspection showed all wires connected properly to the slip ring terminals, but the technician hadn't removed the insulation from the wires! Insulation and wire was neatly wrapped around the terminals.

Note: This technician had been on this type work for at least five years.

BOO BOO

Using fluid damped accelerometers for low frequency measurements in a temperature environment of -35°F without correcting data for increased damping ratio.

Program Requirements: To measure accelerations from 0 thru ±4.5 G's, 0 to 20 Hz with the overall error not to exceed ±0.15 G peak.

Environment: Accelerometers were located in an aircraft compartment whose temperature ranged from -30°F to -40°F during and approximately 30 minutes prior to acceleration test.

Accelerometer Used For Test: CEC Model 4-202-0001, ±5 G with a natural frequency of approximately 300 Hz.

Accelerometer Environmental Specification: Compensated Temperature Range: -65°F to 250°F; Thermal Zero Shift: 0.003% full range/°F; Thermal Coefficient of Sensitivity: 0.015% full range/°F; Damping: 0.7 of critical at 77°F and rated excitation.

Conclusion: Laboratory test of these accelerometers showed their output signal (MV/G/V) to be attenuated by an average of 9% at 4 G's, 18 Hz, -35°F from their 77°F reference output signal. This attenuation is attributed to the considerable increase in the damping ratio (damping fluid viscosity increase) occurring with the decrease in temperature from 77°F to -35°F. Correcting the flight data by applying the accelerometer in flight base temperatures to the family of frequency response/temperature calibration curves provided data well within the error band of ±0.15 G's.

BOO BOO

A malfunction of a small rocket engine, resulting from an apparent excessive pressure build-up in the combustion chamber could not be confirmed from the telemetry record. That record showed a double peak of about full scale pressure at the time of the malfunction. Further consideration of all system characteristics led to the conclusion that the discriminator response was such as to turn an excessively large signal with a single peak into a double peaked output of much smaller amplitude.

BOO BOO

The use of an oscilloscope and its differential-type plug-in preamplifier for displaying transient voltages produced by a quartz pressure transducer: The pressure measurements were to be made over a total time period of 500 milliseconds. A source follower was used as an impedance converter in an attempt to match the very high impedance of the transducer. Together with the transducer, the source follower provided an RC time-constant of 100 seconds. In order to maintain this time-constant throughout the display system, the oscilloscope preamplifier was operated in the DC mode. Since the source follower generated a constant DC offset of 10 volts, and the transient pressure-generated voltages were only about 50 millivolts in amplitude, it was necessary to introduce a 10 volt common-mode voltage into the second channel of the differential-type preamplifier.

Approximately 4 to 5 centimeters of signal deflection on the scope graticule were desired. This required a preamplifier sensitivity of 10 millivolts per centimeter. Such a sensitivity setting could be achieved in one of two ways. One method was to set the attenuator, labeled "millivolts/cm," in the "1" position, and the other control, labeled "mv/cm multiplier," in the "10" position. The other method was to reverse the settings of these two controls. My experience and familiarity with these preamplifiers had been based primarily on single-ended operation. I knew that the frequency response and stability of the preamplifier improved as the setting of the multiplier control was increased. Since, in previous usage of the preamplifier, frequency response and stability were of prime concern, requiring the setting of the attenuator at "1" and the multiplier at "10," I let an old habit influence my actions in this new application. Thus, without consulting the instruction manual, I automatically set the attenuator at "1" and the multiplier at "10."

To make matters worse, in order to simplify the voltage calibration of the preamplifier and scope face, I operated the differential-type preamplifier in the single-ended mode. This means that I removed both the connection from the source follower to the first channel, and the 10 volt bucking voltage from the second channel, and then introduced small known DC voltages in the first or A channel. Those of you who are familiar with the use of the differential-type preamplifier will realize that I had succeeded in compounding my errors.

It was not until many test runs later that the errors of my technique dawned upon me. First, I decided to recheck the preamplifier instruction manual. I found that under the particular test conditions, I had no choice in the settings of the attenuator

and multiplier controls. The preamplifier is limited to a common-mode voltage of 5 volts when the attenuator is set at the "1" position, regardless of the setting of the multiplier. When the attenuator is set at "10," the common-mode voltage is limited to 50 volts. Since the common-mode voltage in my application was 10 volts, I should have set the attenuator at "10" and the multiplier at "1." Even when the preamplifier is operated properly, there is still some non-linearity present. To achieve greatest accuracy in the pressure measurement, it is necessary to obtain a voltage calibration of the preamplifier and scope when preamplifier is operating in the differential mode. This requires the introduction into channel A of known voltages differing by small amounts from the 10 volt level, and the use of a constant 10 volt bucking voltage in channel B.

When I made these changes and compared calibrations taken before and after the change, I found differences in voltage calibration by as much as 30 percent. Thus, the measurement of pressure in the earlier runs could have been in error by 30 percent.

Perhaps the moral of this tale is: "Don't rely completely on your memory or judgement; always review the manufacturer's instruction manual before using equipment in a manner which differs from what you have become accustomed."

BOO BOO

The requirement was to monitor and record the current being drawn by some test equipment. A thermocouple ammeter was being used. Thermocouple ammeters will handle very little overcurrent. To protect them from damage, the meter has a built-in protective shunt which is removed when taking a reading by pushing a push-button switch. There is a red line on the meter at about 1/4 full scale and a sign which says, "Do not push button when meter reading is above red line."

The ammeter was set on too low a full scale range so the meter always read above the red line. Instead of switching to a higher current scale, the test engineer continued to take data without pushing the button and removing the protective shunt. One problem was that the meter was not calibrated for use with the protective shunt.

BOO BOO

Charge amplifiers operating in long time-constant may go into saturation due to stored charge generated by crystal transducers responding to thermal changes.

BOO BOO

Some time ago I was discussing dynamic pressure measurements and calibration requirements with a number of technical people at one of the military R & D centers. I was especially interested in the need for dynamic calibration of pressure transducers at the activity.

I found a number of varied and substantial requirements covering a wide range of pressure and frequency/time. One group explained that, although they were performing a large number of dynamic measurements on a particular development project, they had no need for dynamic calibration. Instead, they had selected a particular model and manufacture of transducer and were making all their measurements with that transducer. The transducer selected appeared to be adequate and their results were consistent. The consistency of results pleased them and convinced them that they had normalized the measurements.

About a year later I had two visitors from "the group without any problems." They eventually had interfaced with another organization which made some measurements with a different transducer. The results of their tests were quite different and they initiated a crash effort to determine the real pressure-time relationship. They were, at that point, very interested in having these transducers calibrated dynamically.

BOO BOO

A series of measurements was recently performed on vibrations and noise generated in walls and similar barriers when forced entry was attempted by means of various hand and power tools. Accelerometers were mounted on the walls, microphones near the walls. Data were tape recorded for later analysis. Testing was performed on abandoned buildings which were subsequently torn down. Data analysis indicated acoustic signals with frequencies up to about 40 kHz; vibration levels were only recorded up to 6 kHz due to tape speed imposed frequency limitations of the recorder used for vibration signals. A brief test of vibration levels on small metallic barrier panels produced vibration frequencies beyond 20 kHz. It is highly likely that important vibration data were lost from the original measurements due to insufficient band width.

BOO BOO

Assuming that an input conditioner was configured for a full bridge transducer, when it was really for a half bridge input.

BOO BOO

The requirement was to simply check the vibration calibration and frequency response of a ±20 g full scale accelerometer. Descriptive information supplied was brief, but showed how to hook unit up and showed specifications (overrange of 100 g and a resonance frequency of about 1000 Hz.) Test was initiated with vibration level applied at ±10 g with output measured at discrete frequencies.

Frequency was increased through the resonance at which point the output became intermittent than zero. Inspection of the data revealed essentially no damping, and thus with 10 g applied at the resonance, the sensor stress was above 1000 g. Internal inspection of the unit showed it broken.

In short, the unit did not survive sinusoidal vibration of one-half full scale at the resonance frequency. I suppose the literature should have warned me. I suppose one would need to protect the unit in application from possibility of such vibration exposure.

BOO BOO

Using high quality-high input impedance differential input strain gage amplifiers.

Use high quality-low leakage strain gage power supply.

Connect together---forget to establish ground reference for strain gage bridge.

System works fine for a while until random, uncontrolled leakage paths cause input circuit to charge up until CMV limit is reached.

Amplifier output starts dipping---Wha happen???

BOO BOO

Miniature accelerometers with integral cables: when removing from its box, the coiled cable can whip the accelerometer against the box, bench top, or whatever. Resulting impact shock can be disastrous.

BOO BOO

A specification for a charge amplifier was prepared calling for the frequency response to be flat within ±2% from 10 Hz to 3500 Hz. A contract for a quantity of these amplifiers was awarded. Upon delivery the amplifiers were tested and found to meet specifications.

One of these amplifiers and an accelerometer was used on a test. Analysis of the data showed a severe resonance at 7 Hz.

The amplifier was tested again and found to have a sharp peak in response at 7 Hz with the gain several times more than within the pass band of 10 Hz to 3500 Hz.

The specification was eventually rewritten calling for the response outside the pass band to have no peaks greater than 1.05 of the response within the pass band.

BOO BOO

In an attempt to measure stage separation acceleration of a multistage rocket, a piezoresistive accelerometer system was chosen because of its steady state response. The accelerometer full scale range, amplifier gain and VCO bandwidth were chosen in accordance with the expected separation acceleration. VCO bandwidth was wide enough to cover the flat response range of the accelerometer and rolled off rapidly above that so as to minimize distortion due to the accelerometers resonant rise.

Upon test, the VCO went to band edge at initial separation, never to return. Subsequent investigation of the separation phenomenon with high g shock accelerometers revealed a very narrow, high g pulse coincident with detonation of explosive bolts which wiped out the undamped piezoresistive accelerometers before and significant low frequency acceleration occurred.

BOO BOO

An exciter-demodulator for an LVDT was being used to take data well below its frequency roll-off, but error was apparent when time correlation was attempted. Use of a constant-amplitude filter in the exciter-demodulator output circuit produced a steep phase angle change in the LVDT signal.

BOO BOO

The intended measurement was to monitor structure induced vibrations of approximately 4 g's, generated by the firing of a thruster engine. The equipment purchased was all high quality airborne flight instrumentation and no problems were anticipated as the approximate g levels were already known. The full scale range of the system was well above the expected input level and since the amplifier gain was fixed and the accelerometer calibrated with the amplifier, no problems of incorrect or inadequate range was possible.

The system was installed and tested prior to actual flight. Results - amplifier saturated resulting in a complete loss of data.

After several more test firings, which produced identical results, it was decided to make additional measurements using strain gages. The results of these tests showed the following and explained what was actually happening:

1. The measured strain was approximately 250 μ strain.

2. The accelerometer being used had a specific base strain sensitivity of 25 equivalent g per 250 μ strain.

3. This resulted in an equivalent output of 25 g's, which was over 6 times higher than the actual acceleration that was to be measured.

Another accelerometer with 50 times lower base strain sensitivity was selected and as an additional precaution, it was mounted on an insulated mounting stud. This combination resulted in a base strain sensitivity of less than .025 equivalent g per 250 μ strain, which was well below the acceleration level to be measured. Subsequent firings were made and good valid data was gathered.

BOO BOO

Making transducer connections to a constant-current power supply when it is turned on will subject the transducer to full compliance voltage and sometimes burn it out.

BOO BOO

This boo boo consists of trying to extract data from an IRIG proportional subcarrier system. During a recent instrumental flight, we found that some very important data on some channels was in the 0 to 20 mv range. It so happened that this was also the internal noise level of the multiplex unit. Laboratory checkout indicated that a 5 mv input-output could be realized but during full use anything below 20 mv was lost.

BOO BOO

Sometimes it is more difficult to receive transducers in working order than it is to calibrate and use them.

A case in point: an application required several extremely low pressure transducers. The user complained that the gages were found defective at incoming inspection. A study revealed that the diaphragm was broken on many. The problem was traced to a protective cap installed by the manufacturer. Pressures generated during installation of the cap over the diaphragm generated pressures over the burst pressure rating.

BOO BOO

A user bought a large quantity of low "g" accelerometers on several orders. Rejections were running 40% due to inoperative gages. The user stated that the devices were removed from their boxes and placed in protective tote trays for "safe" handling. The failures were traced to over ranging due to the impact generated when the trays were placed on the production line benches.

BOO BOO

An attempt was made to measure vibration in a 900 KW generator frame. The accelerometer was located in the center of a loosely attached "J" box lid.

An accurate determination of the rather large accelerations in the lid of the "J" box resulted. Unfortunately there was no detectable relation between these accelerations and the desired more moderate vibrations in the heavy generator frame.

BOO BOO

Insidious Long Term Temperature Drift Associated with Low Mass Sensors

In measuring the temperature stability of a low mass semiconductor pressure transducer the following laboratory apparatus was employed:

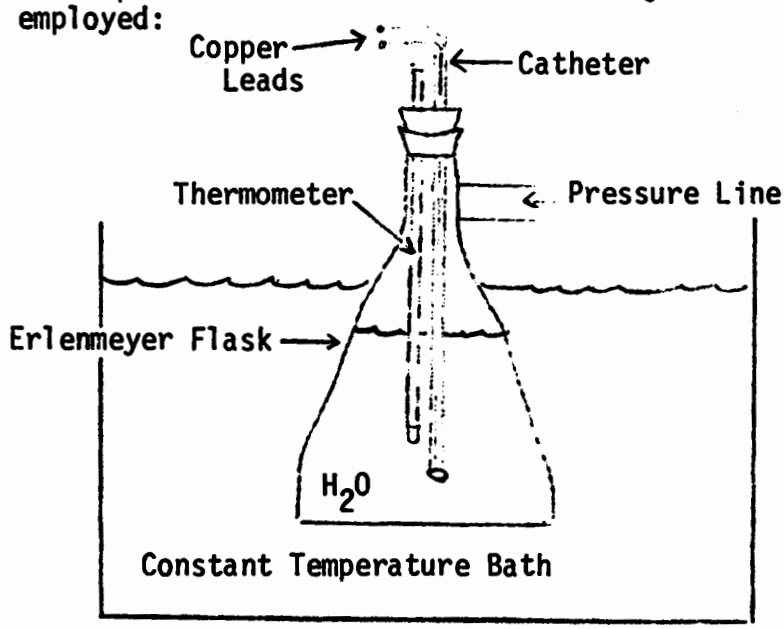

The pressure sensor mounts on the end of a 2mm-diameter catheter which is inserted through a stopper in the mount of an Erlenmeyer flask. The tip of the catheter is immersed several inches below the surface of the water level within the flask. Also extending into the bath alongside the sensor is a thermometer for measuring the temperature of the water within which the sensor is immersed. A pressure line feeds into the neck of the flask so that the pressure above the water can be varied, in turn changing the pressure at the catheter tip. The entire assembly, except for the mouth and neck of the flask, is immersed in a constant temperature bath.

The purpose of the experiment is to generate a family of output vs pressure curves with temperature as a parameter. The procedure is as follows:

1. The temperature of the constant temperature bath is set.

2. When the thermometer inside the flask shows that the water temperature within the flask has reached temperature (that is, that it agrees with the temperature of the bath), the first datum point is recorded.

3. A new pressure is set and a second datum point recorded and so on until the complete pressure vs output curve is generated.

4. The procedure is repeated at a new temperature, always waiting until the thermometer reading agrees with the bath temperature.

Results of this calibration procedure show severe conflicts with the expected temperature behavior.

After much data taking, the following explanation emerged: The thermometer reading is not an adequate measure of the sensor temperature because the relatively large copper lead wires conduct heat away from the small mass, small area sensor or sensor package rapidly enough to produce an actual sensor temperature somewhat between that of the water and that of the slowly heated copper wires. Not until the wires reach the water temperature does the sensor data become reasonable. This model was confirmed by routing the copper wires through the bath so that they reached temperature rapidly. Anomalous temperature behavior then disappeared.

Moral: When the sensor gets small but the wires don't, one can't always neglect the same things.